# TECHNISCHES DATENHANDBUCH

## Luft-Wasser-Wärmepumpensystem Tri-Thermal Monoblock

4kW
4kW(Heizung 3kW)
6kW
6kW(Heizung 3kW)
8kW
8kW(Heizung 3kW)
10kW
10kW(Heizung 3kW)
12kW
12kW(Heizung 3kW)
14kW
14kW(Heizung 3kW)
16kW
16kW(Heizung 3kW)

THML-4D/HBp-A
THMLd-4D/3HBp-A
THML-6D/HBp-A
THMLd-6D/3HBp-A
THML-8D/HBp-A
THMLd-8D/3HBp-A
THML-10D/HBp-A
THMLd-10D/3HBp-A
THML-12D/HBp-A
THMLd-12D/3HBp-A
THML-14D/HBp-A
THMLd-14D/3HBp-A
THML-16D/HBp-A
THMLd-16D/3HBp-A

3-PH 12kW
3-PH 12kW(Heizung 3kW)
3-PH 12kW(Heizung 6kW)
3-PH 12kW(Heizung 9kW)
3-PH 14kW
3-PH 14kW(Heizung 3kW)
3-PH 14kW(Heizung 6kW)
3-PH 14kW(Heizung 9kW)
3-PH 16kW
3-PH 16kW(Heizung 3kW)
3-PH 16kW(Heizung 6kW)
3-PH 16kW(Heizung 9kW)

THML-12S/HBp-A
THMLd-12S/3HBp-A
THMLd-12S/6HBp-A
THMLd-12S/9HBp-A
THML-14S/HBp-A
THMLd-14S/3HBp-A
THMLd-14S/6HBp-A
THMLd-14S/9HBp-A
THML-16S/HBp-A
THMLd-16S/3HBp-A
THMLd-16S/6HBp-A
THMLd-16S/9HBp-A

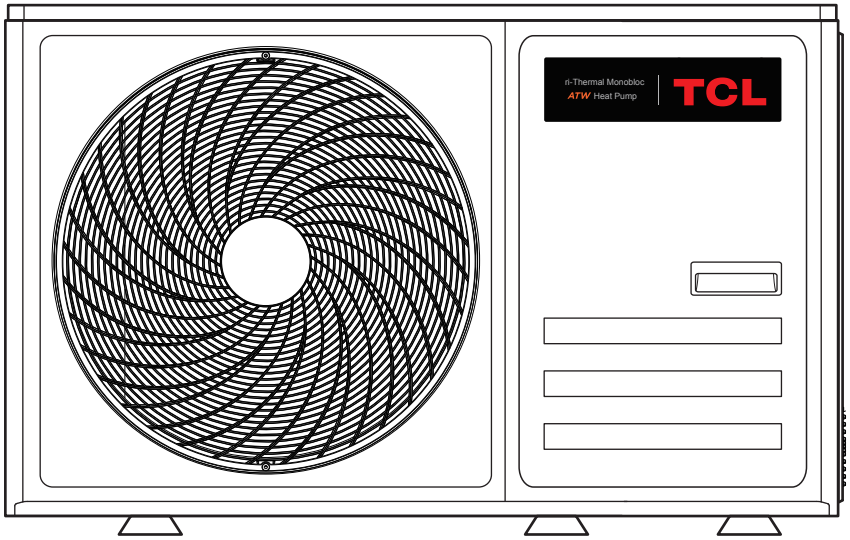


WICHTIG NICHT:
Vielen Dank für den Kauf unseres Produkts:
Bevor Sie Ihr Gerät verwenden, lesen Sie dieses Handbuch bitte sorgfältig durch und bewahren Sie es zum späteren Nachschlagen auf.

# Technisch Parameter

| | |
|---|---|
| Modell(s): | 4kW (Heizung 3kW) ;4 kW |
| Luft-Wasser-Wärmepumpe | Ja |
| Wasser-Wasser-Wärmepumpe | nien |
| Sole/Wasser Wärmepumpe | nein |
| Niedertemperatur-Wärmepumpe | nein |
| Ausgestattet mit einer Zusatzheizung | Ja(für 4kW(Heizung 3kW))nein(für 4kW) |
| Kombiheizgerät mit Wärmepumpe | nein |
| Deklarierter Klimazustand; | Durchschnitt |
| Parameter sind für Anwendungen bei niedrigen Temperaturen deklariert. | |

| Artikel | Symbol | Wert | Einheit | Artikel | Symbol | Wert | Einheit |
|---|---|---|---|---|---|---|---|
| **Nennwärmeleistung (*)** | Bewertet | 5.7 | kW | **Saisonale Raumheizungs-Energieeffizienz** | $\eta_s$ | 182 | % |
| Angegebene Heizleistung bei Teillast bei Innentemperatur 20 °C und Außentemperatur $T_j$ | | | | Angegebene Heizleistung für Teillast bei Innentemperatur 20 °C und Außentemperatur $T_j$ | | | |
| $T_j$ = – 7°C | Bewertet | 5.1 | kW | $T_j$ = – 7°C | COPd | 2.82 | - |
| $T_j$ = + 2°C | Pdh | 3.1 | kW | $T_j$ = + 2°C | COPd | 4.37 | - |
| $T_j$ = +7°C | Pdh | 2.1 | kW | $T_j$ = +7°C | COPd | 6.57 | - |
| $T_j$ = + 12°C | Pdh | 1.7 | kW | $T_j$ = + 12°C | COPd | 8.83 | - |
| $T_j$ = zweiwertige Temperatur | Pdh | 5.1 | kW | $T_j$= zweiwertige Temperatur | COPd | 2.82 | - |
| $T_j$ = Betriebsgrenztemperatur | Pdh | 4.6 | kW | $T_j$ = Betriebsgrenztemperatur | COPd | 2.60 | - |
| Für Luft/Wasser-Wärmepumpen: $T_j$ = – 15 °C (wenn TOL < – 20 °C) | Pdh | N/A | kW | Für Luft/Wasser-Wärmepumpen: Tj = – 15 °C (wenn TOL < – 20 °C) | COPd | N/A | - |
| Zweiwertige Temperatur | $T_{biv}$ | -7 | °C | Für Luft/Wasser-Wärmepumpen: Betriebsgrenztemperatur | TOL | -10 | °C |
| Zyklusintervallkapazität für Heizung | $P_{cych}$ | N/A | kW | Zyklus-Intervall-Effizienz | $COP_{cyc}$ | N/A | - |
| Abbaukoeffizient (**) | $C_{dh}$ | 0.9 | kW | Betriebsgrenztemperatur Heizwasser | WTOL | 65 | °C |
| Stromverbrauch in anderen Modi als dem aktiven Modus | | | | Zusatzheizung | | | |
| Aus-Modus | $P_{OFF}$ | 0.010 | kW | | | | |
| Thermostat-Aus-Modus | $P_{TO}$ | 0.010 | kW | Nennwärmeleistung (**) | $P_{sup}$ | 1.1 | kW |
| Standby Modus | $P_{SB}$ | 0.010 | kW | | | | |
| Kurbelgehäuseheizungsmodus | $P_{CK}$ | 0.000 | kW | Art der Energiezufuhr | Elektrisch | | |

| **Andere Dinge** | | | | | | | |
|---|---|---|---|---|---|---|---|
| Kapazitätskontrolle | Variable | | | Bei Luft/Wasser-Wärmepumpen: Nennluftvolumenstrom, außen | - | 2600 | $m^3/h$ |
| Schallleistungspegel, innen/außen | $L_{WA}$ | -/56 | dB | Für Wasser- oder Sole/Wasser-Wärmepumpen: Sole- oder Wasser- Nennvolumenstrom Außenwärmetauscher | - | N/A | $m^3/h$ |
| Jährlicher Energieverbrauch | $Q_{HE}$ | 2559 | kWh | | | | |
| Für Kombiheizgeräte mit Wärmepumpe: | | | | | | | |
| **Deklariertes Lastprofil** | N/A | | | **Energieeffizienz der Warmwasserbereitung** | $\eta_{wh}$ | N/A | % |
| Täglicher Stromverbrauch | $Q_{elec}$ | N/A | kWh | Täglicher Kraftstoffverbrauch | $Q_{fuel}$ | N/A | kWh |
| Jährlicher Stromverbrauch | AEC | N/A | kWh | Jährlicher Kraftstoffverbrauch | AFC | N/A | GJ |
| Kontaktdetails | Siehe Rückseite des Handbuchs | | | | | | |

(*) Bei Raumheizgeräten mit Wärmepumpe und Kombiheizgeräten mit Wärmepumpe ist die Nennwärmeleistung Prated gleich der Auslegungslast zum Heizen Pdesignh, und die Nennwärmeleistung eines Zusatzheizgeräts Psup ist gleich der Zusatzleistung zum Heizen sup(Tj ). (**) Wenn Cdh nicht durch Messung bestimmt wird, ist der Standard-Degradationskoeffizient Cdh = 0,9.

# Technisch Parameter

| | |
|---|---|
| Modell(s): | 4kW (Heizung 3kW) ;4 kW |
| Luft-Wasser-Wärmepumpe | Ja |
| Wasser-Wasser-Wärmepumpe | nien |
| Sole/Wasser Wärmepumpe | nein |
| Niedertemperatur-Wärmepumpe | nein |
| Ausgestattet mit einer Zusatzheizung | Ja(für 4kW(Heizung 3kW))nein(für 4kW) |
| Kombiheizgerät mit Wärmepumpe | nein |
| Deklarierter Klimazustand; | Wärmer |
| Parameter sind für Anwendungen bei niedrigen Temperaturen deklariert. | |

| Artikel | Symbol | Wert | Einheit | Artikel | Symbol | Wert | Einheit |
|---|---|---|---|---|---|---|---|
| **Nennwärmeleistung (*)** | Bewertet | 5.3 | kW | **Saisonale Raumheizungs-Energieeffizienz** | $\eta_s$ | 264 | % |
| Angegebene Heizleistung bei Teillast bei Innentemperatur 20 °C und Außentemperatur $T_j$ | | | | Angegebene Heizleistung für Teillast bei Innentemperatur 20 °C und Außentemperatur $T_j$ | | | |
| $T_j$ = – 7°C | Bewertet | N/A | kW | $T_j$= – 7°C | COPd | N/A | - |
| $T_j$ = + 2°C | Pdh | 5.3 | kW | $T_j$= + 2°C | COPd | 3.39 | - |
| $T_j$ = +7°C | Pdh | 3.4 | kW | $T_j$ = +7°C | COPd | 5.81 | - |
| $T_j$ = + 12°C | Pdh | 1.7 | kW | $T_j$ = + 12°C | COPd | 8.62 | - |
| $T_j$ = zweiwertige Temperatur | Pdh | 3.4 | kW | $T_j$= zweiwertige Temperatur | COPd | 5.81 | - |
| $T_j$ = Betriebsgrenztemperatur | Pdh | 5.3 | kW | $T_j$ = Betriebsgrenztemperatur | COPd | 3.39 | - |
| Für Luft/Wasser-Wärmepumpen: $T_j$ = – 15 °C (wenn TOL < – 20 °C) | Pdh | N/A | kW | Für Luft/Wasser-Wärmepumpen: Tj = – 15 °C (wenn TOL < – 20 °C) | COPd | N/A | - |
| Zweiwertige Temperatur | $T_{biv}$ | -7 | °C | Für Luft/Wasser-Wärmepumpen: Betriebsgrenztemperatur | TOL | 2 | °C |
| Zyklusintervallkapazität für Heizung | $P_{cych}$ | N/A | kW | Zyklus-Intervall-Effizienz | $COP_{cyc}$ | N/A | - |
| Abbaukoeffizient (**) | $C_{dh}$ | 0.9 | kW | Betriebsgrenztemperatur Heizwasser | WTOL | 65 | °C |
| Stromverbrauch in anderen Modi als dem aktiven Modus | | | | Zusatzheizung | | | |
| Aus-Modus | $P_{OFF}$ | 0.010 | kW | | | | |
| Thermostat-Aus-Modus | $P_{TO}$ | 0.010 | kW | Nennwärmeleistung (**) | $P_{sup}$ | 0.0 | kW |
| Standby Modus | $P_{SB}$ | 0.010 | kW | | | | |
| Kurbelgehäuseheizungsmodus | $P_{CK}$ | 0.000 | kW | Art der Energiezufuhr | Elektrisch | | |

| | | | | | | | |
|---|---|---|---|---|---|---|---|
| **Andere Dinge** | | | | | | | |
| Kapazitätskontrolle | Variable | | | Bei Luft/Wasser-Wärmepumpen: Nennluftvolumenstrom, außen | - | 2600 | $m^3/h$ |
| Schallleistungspegel, innen/außen | $L_{WA}$ | -/56 | dB | Für Wasser- oder Sole/Wasser-Wärmepumpen: Sole- oder Wasser- Nennvolumenstrom Außenwärmetauscher | - | N/A | $m^3/h$ |
| Jährlicher Energieverbrauch | $Q_{HE}$ | 1065 | kWh | | | | |
| Für Kombiheizgeräte mit Wärmepumpe: | | | | | | | |
| **Deklariertes Lastprofil** | N/A | | | **Energieeffizienz der Warmwasserbereitung** | $\eta_{wh}$ | N/A | % |
| Täglicher Stromverbrauch | $Q_{elec}$ | N/A | kWh | Täglicher Kraftstoffverbrauch | $Q_{fuel}$ | N/A | kWh |
| Jährlicher Stromverbrauch | AEC | N/A | kWh | Jährlicher Kraftstoffverbrauch | AFC | N/A | GJ |
| Kontaktdetails | Siehe Rückseite des Handbuchs | | | | | | |

(*) Bei Raumheizgeräten mit Wärmepumpe und Kombiheizgeräten mit Wärmepumpe ist die Nennwärmeleistung Prated gleich der Auslegungslast zum Heizen Pdesignh, und die Nennwärmeleistung eines Zusatzheizgeräts Psup ist gleich der Zusatzleistung zum Heizen sup(Tj ). (**) Wenn Cdh nicht durch Messung bestimmt wird, ist der Standard-Degradationskoeffizient Cdh = 0,9.

# Technisch Parameter

| | |
|---|---|
| Modell(s): | 4kW (Heizung 3kW) ;4 kW |
| Luft-Wasser-Wärmepumpe | Ja |
| Wasser-Wasser-Wärmepumpe | nien |
| Sole/Wasser Wärmepumpe | nein |
| Niedertemperatur-Wärmepumpe | nein |
| Ausgestattet mit einer Zusatzheizung | Ja(für 4kW(Heizung 3kW))nein(für 4kW) |
| Kombiheizgerät mit Wärmepumpe | nein |
| Deklarierter Klimazustand; | kälter |
| Parameter sind für Anwendungen bei niedrigen Temperaturen deklariert. | |

| Artikel | Symbol | Wert | Einheit | Artikel | Symbol | Wert | Einheit |
|---|---|---|---|---|---|---|---|
| **Nennwärmeleistung (*)** | Bewertet | 5.0 | kW | **Saisonale Raumheizungs-Energieeffizienz** | $\eta_s$ | 160 | % |
| Angegebene Heizleistung bei Teillast bei Innentemperatur 20 °C und Außentemperatur $T_j$ | | | | Angegebene Heizleistung für Teillast bei Innentemperatur 20 °C und Außentemperatur $T_j$ | | | |
| $T_j$ = – 7°C | Bewertet | 3.0 | kW | $T_j$ = – 7°C | COPd | 3.45 | - |
| $T_j$ = + 2°C | Pdh | 1.9 | kW | $T_j$ = + 2°C | COPd | 5.00 | - |
| $T_j$ = +7°C | Pdh | 1.2 | kW | $T_j$ = +7°C | COPd | 5.73 | - |
| $T_j$ = + 12°C | Pdh | 1.6 | kW | $T_j$ = + 12°C | COPd | 7.84 | - |
| $T_j$ = zweiwertige Temperatur | Pdh | 4.1 | kW | $T_j$= zweiwertige Temperatur | COPd | 2.51 | - |
| $T_j$ = Betriebsgrenztemperatur | Pdh | 3.3 | kW | $T_j$ = Betriebsgrenztemperatur | COPd | 1.72 | - |
| Für Luft/Wasser-Wärmepumpen: $T_j$ = – 15 °C (wenn TOL < – 20 °C) | Pdh | N/A | kW | Für Luft/Wasser-Wärmepumpen: Tj = – 15 °C (wenn TOL < – 20 °C) | COPd | N/A | - |
| Zweiwertige Temperatur | $T_{biv}$ | -15 | °C | Für Luft/Wasser-Wärmepumpen: Betriebsgrenztemperatur | TOL | -22 | °C |
| Zyklusintervallkapazität für Heizung | $P_{cych}$ | N/A | kW | Zyklus-Intervall-Effizienz | $COP_{cyc}$ | N/A | - |
| Abbaukoeffizient (**) | $C_{dh}$ | 0.9 | kW | Betriebsgrenztemperatur Heizwasser | WTOL | 65 | °C |
| Stromverbrauch in anderen Modi als dem aktiven Modus | | | | Zusatzheizung | | | |
| Aus-Modus | $P_{OFF}$ | 0.010 | kW | | | | |
| Thermostat-Aus-Modus | $P_{TO}$ | 0.010 | kW | Nennwärmeleistung (**) | $P_{sup}$ | 2.7 | kW |
| Standby Modus | $P_{SB}$ | 0.010 | kW | | | | |
| Kurbelgehäuseheizungsmodus | $P_{CK}$ | 0.000 | kW | Art der Energiezufuhr | Elektrisch | | |

| | | | | | | | |
|---|---|---|---|---|---|---|---|
| **Andere Dinge** | | | | | | | |
| Kapazitätskontrolle | Variable | | | Bei Luft/Wasser-Wärmepumpen: Nennluftvolumenstrom, außen | - | 2600 | $m^3/h$ |
| Schallleistungspegel, innen/außen | $L_{WA}$ | -/56 | dB | Für Wasser- oder Sole/Wasser-Wärmepumpen: Sole- oder Wasser- Nennvolumenstrom Außenwärmetauscher | - | N/A | $m^3/h$ |
| Jährlicher Energieverbrauch | $Q_{HE}$ | 3038 | kWh | | | | |
| Für Kombiheizgeräte mit Wärmepumpe: | | | | | | | |
| **Deklariertes Lastprofil** | N/A | | | **Energieeffizienz der Warmwasserbereitung** | $\eta_{wh}$ | N/A | % |
| Täglicher Stromverbrauch | $Q_{elec}$ | N/A | kWh | Täglicher Kraftstoffverbrauch | $Q_{fuel}$ | N/A | kWh |
| Jährlicher Stromverbrauch | AEC | N/A | kWh | Jährlicher Kraftstoffverbrauch | AFC | N/A | GJ |
| Kontaktdetails | Siehe Rückseite des Handbuchs | | | | | | |

(*) Bei Raumheizgeräten mit Wärmepumpe und Kombiheizgeräten mit Wärmepumpe ist die Nennwärmeleistung Prated gleich der Auslegungslast zum Heizen Pdesignh, und die Nennwärmeleistung eines Zusatzheizgeräts Psup ist gleich der Zusatzleistung zum Heizen sup(Tj ). (**) Wenn Cdh nicht durch Messung bestimmt wird, ist der Standard-Degradationskoeffizient Cdh = 0,9.

# Technisch Parameter

| | |
|---|---|
| Modell(s): | 4kW (Heizung 3kW) ;4 kW |
| Luft-Wasser-Wärmepumpe | Ja |
| Wasser-Wasser-Wärmepumpe | nien |
| Sole/Wasser Wärmepumpe | nein |
| Niedertemperatur-Wärmepumpe | nein |
| Ausgestattet mit einer Zusatzheizung | Ja(für 4kW(Heizung 3kW))nein(für 4kW) |
| Kombiheizgerät mit Wärmepumpe | nein |
| Deklarierter Klimazustand; | Durchschnitt |
| Parameter werden für die Anwendung bei mittlerer Temperatur deklariert. | |

| Artikel | Symbol | Wert | Einheit | Artikel | Symbol | Wert | Einheit |
|---|---|---|---|---|---|---|---|
| **Nennwärmeleistung (*)** | Bewertet | 4.7 | kW | **Saisonale Raumheizungs-Energieeffizienz** | $\eta_s$ | 131 | % |
| Angegebene Heizleistung bei Teillast bei Innentemperatur 20 °C und Außentemperatur $T_j$ | | | | Angegebene Heizleistung für Teillast bei Innentemperatur 20 °C und Außentemperatur $T_j$ | | | |
| $T_j$ = – 7°C | Bewertet | 4.2 | kW | $T_j$= – 7°C | COPd | 2.14 | - |
| $T_j$ = + 2°C | Pdh | 2.5 | kW | $T_j$ = + 2°C | COPd | 3.26 | - |
| $T_j$ = +7°C | Pdh | 1.7 | kW | $T_j$= +7°C | COPd | 4.44 | - |
| $T_j$ = + 12°C | Pdh | 1.4 | kW | $T_j$ = + 12°C | COPd | 5.54 | - |
| $T_j$= zweiwertige Temperatur | Pdh | 4.2 | kW | $T_j$ = zweiwertige Temperatur | COPd | 2.14 | - |
| $T_j$= Betriebsgrenztemperatur | Pdh | 3.7 | kW | $T_j$ = Betriebsgrenztemperatur | COPd | 1.72 | - |
| Für Luft/Wasser-Wärmepumpen: $T_j$ = – 15 °C (wenn TOL < – 20 °C) | Pdh | N/A | kW | Für Luft/Wasser-Wärmepumpen: Tj = – 15 °C (wenn TOL < – 20 °C) | COPd | N/A | - |
| Zweiwertige Temperatur | $T_{biv}$ | -7 | °C | Für Luft/Wasser-Wärmepumpen: Betriebsgrenztemperatur | TOL | -10 | °C |
| Zyklusintervallkapazität für Heizung | $P_{cych}$ | N/A | kW | Zyklus-Intervall-Effizienz | $COP_{cyc}$ | N/A | - |
| Abbaukoeffizient (**) | $C_{dh}$ | 0.9 | kW | Betriebsgrenztemperatur Heizwasser | WTOL | 65 | °C |
| Stromverbrauch in anderen Modi als dem aktiven Modus | | | | Zusatzheizung | | | |
| Aus-Modus | $P_{OFF}$ | 0.010 | kW | | | | |
| Thermostat-Aus-Modus | $P_{TO}$ | 0.010 | kW | Nennwärmeleistung (**) | $P_{sup}$ | 1.0 | kW |
| Standby Modus | $P_{SB}$ | 0.010 | kW | | | | |
| Kurbelgehäuseheizungsmodus | $P_{CK}$ | 0.000 | kW | Art der Energiezufuhr | Elektrisch | | |

| | | | | | | | |
|---|---|---|---|---|---|---|---|
| **Andere Dinge** | | | | | | | |
| Kapazitätskontrolle | Variable | | | Bei Luft/Wasser-Wärmepumpen: Nennluftvolumenstrom, außen | - | 2600 | $m^3/h$ |
| Schallleistungspegel, innen/außen | $L_{WA}$ | -/56 | dB | Für Wasser- oder Sole/Wasser-Wärmepumpen: Sole- oder Wasser- Nennvolumenstrom Außenwärmetauscher | - | N/A | $m^3/h$ |
| Jährlicher Energieverbrauch | $Q_{HE}$ | 2898 | kWh | | | | |
| Für Kombiheizgeräte mit Wärmepumpe: | | | | | | | |
| **Deklariertes Lastprofil** | N/A | | | **Energieeffizienz der Warmwasserbereitung** | $\eta_{wh}$ | N/A | % |
| Täglicher Stromverbrauch | $Q_{elec}$ | N/A | kWh | Täglicher Kraftstoffverbrauch | $Q_{fuel}$ | N/A | kWh |
| Jährlicher Stromverbrauch | AEC | N/A | kWh | Jährlicher Kraftstoffverbrauch | AFC | N/A | GJ |
| Kontaktdetails | Siehe Rückseite des Handbuchs | | | | | | |

(*) Bei Raumheizgeräten mit Wärmepumpe und Kombiheizgeräten mit Wärmepumpe ist die Nennwärmeleistung Prated gleich der Auslegungslast zum Heizen Pdesignh, und die Nennwärmeleistung eines Zusatzheizgeräts Psup ist gleich der Zusatzleistung zum Heizen sup(Tj ). (**) Wenn Cdh nicht durch Messung bestimmt wird, ist der Standard-Degradationskoeffizient Cdh = 0,9.

# Technisch Parameter

| | |
|---|---|
| Modell(s): | 4kW (Heizung 3kW) ;4 kW |
| Luft-Wasser-Wärmepumpe | Ja |
| Wasser-Wasser-Wärmepumpe | nien |
| Sole/Wasser Wärmepumpe | nein |
| Niedertemperatur-Wärmepumpe | nein |
| Ausgestattet mit einer Zusatzheizung | Ja(für 4kW(Heizung 3kW))nein(für 4kW) |
| Kombiheizgerät mit Wärmepumpe | nein |
| Deklarierter Klimazustand; | Wärmer |
| Parameter sind für Niedertemperaturanwendung deklariert . | |

| Artikel | Symbol | Wert | Einheit | Artikel | Symbol | Wert | Einheit |
|---|---|---|---|---|---|---|---|
| **Nennwärmeleistung (*)** | Bewertet | 5.0 | kW | **Saisonale Raumheizungs-Energieeffizienz** | $\eta_s$ | 165 | % |
| Angegebene Heizleistung bei Teillast bei Innentemperatur 20 °C und Außentemperatur $T_j$ | | | | Angegebene Heizleistung für Teillast bei Innentemperatur 20 °C und Außentemperatur $T_j$ | | | |
| $T_j$ = – 7°C | Bewertet | N/A | kW | $T_j$ = – 7°C | COPd | N/A | - |
| $T_j$= + 2°C | Pdh | 5.0 | kW | $T_j$ = + 2°C | COPd | 2.31 | - |
| $T_j$ = +7°C | Pdh | 3.2 | kW | $T_j$ = +7°C | COPd | 3.68 | - |
| $T_j$ = + 12°C | Pdh | 1.5 | kW | $T_j$ = + 12°C | COPd | 5.21 | - |
| $T_j$ = zweiwertige Temperatur | Pdh | 3.2 | kW | $T_j$ = zweiwertige Temperatur | COPd | 3.68 | - |
| $T_j$ = Betriebsgrenztemperatur | Pdh | 5.0 | kW | $T_j$= Betriebsgrenztemperatur | COPd | 2.31 | - |
| Für Luft/Wasser-Wärmepumpen: $T_j$ = – 15 °C (wenn TOL < – 20 °C) | Pdh | N/A | kW | Für Luft/Wasser-Wärmepumpen: Tj = – 15 °C (wenn TOL < – 20 °C) | COPd | N/A | - |
| Zweiwertige Temperatur | $T_{biv}$ | 7 | °C | Für Luft/Wasser-Wärmepumpen: Betriebsgrenztemperatur | TOL | 2 | °C |
| Zyklusintervallkapazität für Heizung | $P_{cych}$ | N/A | kW | Zyklus-Intervall-Effizienz | $COP_{cyc}$ | N/A | - |
| Abbaukoeffizient (**) | $C_{dh}$ | 0.9 | kW | Betriebsgrenztemperatur Heizwasser | WTOL | 65 | °C |
| Stromverbrauch in anderen Modi als dem aktiven Modus | | | | Zusatzheizung | | | |
| Aus-Modus | $P_{OFF}$ | 0.010 | kW | | | | |
| Thermostat-Aus-Modus | $P_{TO}$ | 0.010 | kW | Nennwärmeleistung (**) | $P_{sup}$ | 0.0 | kW |
| Standby Modus | $P_{SB}$ | 0.010 | kW | | | | |
| Kurbelgehäuseheizungsmodus | $P_{CK}$ | 0.000 | kW | Art der Energiezufuhr | Elektrisch | | |

| | | | | | | | |
|---|---|---|---|---|---|---|---|
| **Andere Dinge** | | | | | | | |
| Kapazitätskontrolle | Variable | | | Bei Luft/Wasser-Wärmepumpen: Nennluftvolumenstrom, außen | - | 2600 | $m^3/h$ |
| Schallleistungspegel, innen/außen | $L_{WA}$ | -/56 | dB | Für Wasser- oder Sole/Wasser-Wärmepumpen: Sole- oder Wasser- Nennvolumenstrom Außenwärmetauscher | - | N/A | $m^3/h$ |
| Jährlicher Energieverbrauch | $Q_{HE}$ | 1604 | kWh | | | | |
| Für Kombiheizgeräte mit Wärmepumpe: | | | | | | | |
| **Deklariertes Lastprofil** | N/A | | | **Energieeffizienz der Warmwasserbereitung** | $\eta_{wh}$ | N/A | % |
| Täglicher Stromverbrauch | $Q_{elec}$ | N/A | kWh | Täglicher Kraftstoffverbrauch | $Q_{fuel}$ | N/A | kWh |
| Jährlicher Stromverbrauch | AEC | N/A | kWh | Jährlicher Kraftstoffverbrauch | AFC | N/A | GJ |
| Kontaktdetails | Siehe Rückseite des Handbuchs | | | | | | |

(*) Bei Raumheizgeräten mit Wärmepumpe und Kombiheizgeräten mit Wärmepumpe ist die Nennwärmeleistung Prated gleich der Auslegungslast zum Heizen Pdesignh, und die Nennwärmeleistung eines Zusatzheizgeräts Psup ist gleich der Zusatzleistung zum Heizen sup(Tj ). (**) Wenn Cdh nicht durch Messung bestimmt wird, ist der Standard-Degradationskoeffizient Cdh = 0,9.

# Technisch Parameter

| | |
|---|---|
| Modell(s): | 4kW (Heizung 3kW) ;4 kW |
| Luft-Wasser-Wärmepumpe | Ja |
| Wasser-Wasser-Wärmepumpe | nien |
| Sole/Wasser Wärmepumpe | nein |
| Niedertemperatur-Wärmepumpe | nein |
| Ausgestattet mit einer Zusatzheizung | Ja(für 4kW(Heizung 3kW))nein(für 4kW) |
| Kombiheizgerät mit Wärmepumpe | nein |
| Deklarierter Klimazustand; | kälter |
| Parameter werden für die Anwendung bei mittlerer Temperatur deklariert. | |

| Artikel | Symbol | Wert | Einheit | Artikel | Symbol | Wert | Einheit |
|---|---|---|---|---|---|---|---|
| **Nennwärmeleistung (*)** | Bewertet | 3.7 | kW | **Saisonale Raumheizungs-Energieeffizienz** | $\eta_s$ | 107 | % |
| Angegebene Heizleistung bei Teillast bei Innentemperatur 20 °C und Außentemperatur $T_j$ | | | | Angegebene Heizleistung für Teillast bei Innentemperatur 20 °C und Außentemperatur $T_j$ | | | |
| $T_j$ = – 7°C | Bewertet | 2.3 | kW | $T_j$= – 7°C | COPd | 2.34 | - |
| $T_j$ = + 2°C | Pdh | 1.4 | kW | $T_j$ = + 2°C | COPd | 3.22 | - |
| $T_j$ = +7°C | Pdh | 1.6 | kW | $T_j$= +7°C | COPd | 4.58 | - |
| $T_j$ = + 12°C | Pdh | 1.5 | kW | $T_j$ = + 12°C | COPd | 6.33 | - |
| $T_j$= zweiwertige Temperatur | Pdh | 3.0 | kW | $T_j$ = zweiwertige Temperatur | COPd | 1.69 | - |
| $T_j$= Betriebsgrenztemperatur | Pdh | 2.5 | kW | $T_j$ = Betriebsgrenztemperatur | COPd | 1.17 | - |
| Für Luft/Wasser-Wärmepumpen: $T_j$ = – 15 °C (wenn TOL < – 20 °C) | Pdh | N/A | kW | Für Luft/Wasser-Wärmepumpen: Tj = – 15 °C (wenn TOL < – 20 °C) | COPd | N/A | - |
| Zweiwertige Temperatur | $T_{biv}$ | -15 | °C | Für Luft/Wasser-Wärmepumpen: Betriebsgrenztemperatur | TOL | -22 | °C |
| Zyklusintervallkapazität für Heizung | $P_{cych}$ | N/A | kW | Zyklus-Intervall-Effizienz | $COP_{cyc}$ | N/A | - |
| Abbaukoeffizient (**) | $C_{dh}$ | 0.9 | kW | Betriebsgrenztemperatur Heizwasser | WTOL | 65 | °C |
| Stromverbrauch in anderen Modi als dem aktiven Modus | | | | Zusatzheizung | | | |
| Aus-Modus | $P_{OFF}$ | 0.010 | kW | | | | |
| Thermostat-Aus-Modus | $P_{TO}$ | 0.010 | kW | Nennwärmeleistung (**) | $P_{sup}$ | 1.2 | kW |
| Standby Modus | $P_{SB}$ | 0.010 | kW | | | | |
| Kurbelgehäuseheizungsmodus | $P_{CK}$ | 0.000 | kW | Art der Energiezufuhr | Elektrisch | | |

| | | | | | | | |
|---|---|---|---|---|---|---|---|
| **Andere Dinge** | | | | | | | |
| Kapazitätskontrolle | Variable | | | Bei Luft/Wasser-Wärmepumpen: Nennluftvolumenstrom, außen | - | 2600 | $m^3/h$ |
| Schallleistungspegel, innen/außen | $L_{WA}$ | -/56 | dB | Für Wasser- oder Sole/Wasser-Wärmepumpen: Sole- oder Wasser- Nennvolumenstrom Außenwärmetauscher | - | N/A | $m^3/h$ |
| Jährlicher Energieverbrauch | $Q_{HE}$ | 3308 | kWh | | | | |
| Für Kombiheizgeräte mit Wärmepumpe: | | | | | | | |
| **Deklariertes Lastprofil** | N/A | | | **Energieeffizienz der Warmwasserbereitung** | $\eta_{wh}$ | N/A | % |
| Täglicher Stromverbrauch | $Q_{elec}$ | N/A | kWh | Täglicher Kraftstoffverbrauch | $Q_{fuel}$ | N/A | kWh |
| Jährlicher Stromverbrauch | AEC | N/A | kWh | Jährlicher Kraftstoffverbrauch | AFC | N/A | GJ |
| Kontaktdetails | Siehe Rückseite des Handbuchs | | | | | | |

(*) Bei Raumheizgeräten mit Wärmepumpe und Kombiheizgeräten mit Wärmepumpe ist die Nennwärmeleistung Prated gleich der Auslegungslast zum Heizen Pdesignh, und die Nennwärmeleistung eines Zusatzheizgeräts Psup ist gleich der Zusatzleistung zum Heizen sup(Tj ). (**) Wenn Cdh nicht durch Messung bestimmt wird, ist der Standard-Degradationskoeffizient Cdh = 0,9.

# Technisch Parameter

| | |
|---|---|
| Modell(s): | 6kW (Heizung 3kW) ;6 kW |
| Luft-Wasser-Wärmepumpe | Ja |
| Wasser-Wasser-Wärmepumpe | nien |
| Sole/Wasser Wärmepumpe | nein |
| Niedertemperatur-Wärmepumpe | nein |
| Ausgestattet mit einer Zusatzheizung | Ja(für 6kW(Heizung 3kW))nein(für 6kW) |
| Kombiheizgerät mit Wärmepumpe | nein |
| Deklarierter Klimazustand; | Durchschnitt |
| Parameter sind für Anwendungen bei niedrigen Temperaturen deklariert. | |

| Artikel | Symbol | Wert | Einheit | Artikel | Symbol | Wert | Einheit |
|---|---|---|---|---|---|---|---|
| **Nennwärmeleistung (*)** | Bewertet | 7.0 | kW | **Saisonale Raumheizungs-Energieeffizienz** | $\eta_s$ | 182.7 | % |
| Angegebene Heizleistung bei Teillast bei Innentemperatur 20 °C und Außentemperatur $T_j$ | | | | Angegebene Heizleistung für Teillast bei Innentemperatur 20 °C und Außentemperatur $T_j$ | | | |
| $T_j$ = – 7°C | Bewertet | 6.2 | kW | $T_j$= – 7°C | COPd | 2.74 | - |
| $T_j$ = + 2°C | Pdh | 3.6 | kW | $T_j$ = + 2°C | COPd | 4.39 | - |
| $T_j$ = +7°C | Pdh | 2.5 | kW | $T_j$= +7°C | COPd | 6.72 | - |
| $T_j$ = + 12°C | Pdh | 1.4 | kW | $T_j$ = + 12°C | COPd | 8.13 | - |
| $T_j$= zweiwertige Temperatur | Pdh | 6.2 | kW | $T_j$ = zweiwertige Temperatur | COPd | 2.74 | - |
| $T_j$= Betriebsgrenztemperatur | Pdh | 6.0 | kW | $T_j$ = Betriebsgrenztemperatur | COPd | 2.55 | - |
| Für Luft/Wasser-Wärmepumpen: $T_j$ = – 15 °C (wenn TOL < – 20 °C) | Pdh | N/A | kW | Für Luft/Wasser-Wärmepumpen: Tj = – 15 °C (wenn TOL < – 20 °C) | COPd | N/A | - |
| Zweiwertige Temperatur | $T_{biv}$ | -7 | °C | Für Luft/Wasser-Wärmepumpen: Betriebsgrenztemperatur | TOL | -10 | °C |
| Zyklusintervallkapazität für Heizung | $P_{cych}$ | N/A | kW | Zyklus-Intervall-Effizienz | $COP_{cyc}$ | N/A | - |
| Abbaukoeffizient (**) | $C_{dh}$ | 0.9 | kW | Betriebsgrenztemperatur Heizwasser | WTOL | 65 | °C |
| Stromverbrauch in anderen Modi als dem aktiven Modus | | | | Zusatzheizung | | | |
| Aus-Modus | $P_{OFF}$ | 0.010 | kW | | | | |
| Thermostat-Aus-Modus | $P_{TO}$ | 0.010 | kW | Nennwärmeleistung (**) | $P_{sup}$ | 1.0 | kW |
| Standby Modus | $P_{SB}$ | 0.010 | kW | | | | |
| Kurbelgehäuseheizungsmodus | $P_{CK}$ | 0.000 | kW | Art der Energiezufuhr | Elektrisch | | |

| | | | | | | | |
|---|---|---|---|---|---|---|---|
| **Andere Dinge** | | | | | | | |
| Kapazitätskontrolle | Variable | | | Bei Luft/Wasser-Wärmepumpen: Nennluftvolumenstrom, außen | - | 2800 | $m^3/h$ |
| Schallleistungspegel, innen/außen | $L_{WA}$ | -/59 | dB | Für Wasser- oder Sole/Wasser-Wärmepumpen: Sole- oder Wasser- Nennvolumenstrom Außenwärmetauscher | - | N/A | $m^3/h$ |
| Jährlicher Energieverbrauch | $Q_{HE}$ | 3120 | kWh | | | | |
| Für Kombiheizgeräte mit Wärmepumpe: | | | | | | | |
| **Deklariertes Lastprofil** | N/A | | | **Energieeffizienz der Warmwasserbereitung** | $\eta_{wh}$ | N/A | % |
| Täglicher Stromverbrauch | $Q_{elec}$ | N/A | kWh | Täglicher Kraftstoffverbrauch | $Q_{fuel}$ | N/A | kWh |
| Jährlicher Stromverbrauch | AEC | N/A | kWh | Jährlicher Kraftstoffverbrauch | AFC | N/A | GJ |
| Kontaktdetails | Siehe Rückseite des Handbuchs | | | | | | |

(*) Bei Raumheizgeräten mit Wärmepumpe und Kombiheizgeräten mit Wärmepumpe ist die Nennwärmeleistung Prated gleich der Auslegungslast zum Heizen Pdesignh, und die Nennwärmeleistung eines Zusatzheizgeräts Psup ist gleich der Zusatzleistung zum Heizen sup(Tj ). (**) Wenn Cdh nicht durch Messung bestimmt wird, ist der Standard-Degradationskoeffizient Cdh = 0,9.

# Technisch Parameter

| | |
|---|---|
| Modell(s): | 6kW (Heizung 3kW) ;6 kW |
| Luft-Wasser-Wärmepumpe | Ja |
| Wasser-Wasser-Wärmepumpe | nien |
| Sole/Wasser Wärmepumpe | nein |
| Niedertemperatur-Wärmepumpe | nein |
| Ausgestattet mit einer Zusatzheizung | Ja(für 6kW(Heizung 3kW))nein(für 6kW) |
| Kombiheizgerät mit Wärmepumpe | nein |
| Deklarierter Klimazustand; | Wärmer |
| Parameter sind für Anwendungen bei niedrigen Temperaturen deklariert. | |

| Artikel | Symbol | Wert | Einheit | Artikel | Symbol | Wert | Einheit |
|---|---|---|---|---|---|---|---|
| **Nennwärmeleistung (*)** | Bewertet | 6.0 | kW | **Saisonale Raumheizungs-Energieeffizienz** | $\eta_s$ | 264 | % |
| Angegebene Heizleistung bei Teillast bei Innentemperatur 20 °C und Außentemperatur $T_j$ | | | | Angegebene Heizleistung für Teillast bei Innentemperatur 20 °C und Außentemperatur $T_j$ | | | |
| $T_j$ = – 7°C | Bewertet | N/A | kW | $T_j$= – 7°C | COPd | N/A | - |
| $T_j$ = + 2°C | Pdh | 5.9 | kW | $T_j$ = + 2°C | COPd | 3.49 | - |
| $T_j$ = +7°C | Pdh | 3.9 | kW | $T_j$= +7°C | COPd | 5.71 | - |
| $T_j$ = + 12°C | Pdh | 2.0 | kW | $T_j$ = + 12°C | COPd | 8.78 | - |
| $T_j$= zweiwertige Temperatur | Pdh | 3.9 | kW | $T_j$ = zweiwertige Temperatur | COPd | 5.71 | - |
| $T_j$= Betriebsgrenztemperatur | Pdh | 5.9 | kW | $T_j$ = Betriebsgrenztemperatur | COPd | 3.49 | - |
| Für Luft/Wasser-Wärmepumpen: $T_j$ = – 15 °C (wenn TOL < – 20 °C) | Pdh | N/A | kW | Für Luft/Wasser-Wärmepumpen: Tj = – 15 °C (wenn TOL < – 20 °C) | COPd | N/A | - |
| Zweiwertige Temperatur | $T_{biv}$ | 7 | °C | Für Luft/Wasser-Wärmepumpen: Betriebsgrenztemperatur | TOL | 2 | °C |
| Zyklusintervallkapazität für Heizung | $P_{cych}$ | N/A | kW | Zyklus-Intervall-Effizienz | $COP_{cyc}$ | N/A | - |
| Abbaukoeffizient (**) | $C_{dh}$ | 0.9 | kW | Betriebsgrenztemperatur Heizwasser | WTOL | 65 | °C |
| Stromverbrauch in anderen Modi als dem aktiven Modus | | | | Zusatzheizung | | | |
| Aus-Modus | $P_{OFF}$ | 0.010 | kW | | | | |
| Thermostat-Aus-Modus | $P_{TO}$ | 0.010 | kW | Nennwärmeleistung (**) | $P_{sup}$ | 0.1 | kW |
| Standby Modus | $P_{SB}$ | 0.010 | kW | | | | |
| Kurbelgehäuseheizungsmodus | $P_{CK}$ | 0.000 | kW | Art der Energiezufuhr | Elektrisch | | |

| | | | | | | | |
|---|---|---|---|---|---|---|---|
| **Andere Dinge** | | | | | | | |
| Kapazitätskontrolle | Variable | | | Bei Luft/Wasser-Wärmepumpen: Nennluftvolumenstrom, außen | - | 2800 | $m^3/h$ |
| Schallleistungspegel, innen/außen | $L_{WA}$ | -/59 | dB | Für Wasser- oder Sole/Wasser-Wärmepumpen: Sole- oder Wasser- Nennvolumenstrom Außenwärmetauscher | - | N/A | $m^3/h$ |
| Jährlicher Energieverbrauch | $Q_{HE}$ | 1202 | kWh | | | | |
| Für Kombiheizgeräte mit Wärmepumpe: | | | | | | | |
| **Deklariertes Lastprofil** | N/A | | | **Energieeffizienz der Warmwasserbereitung** | $\eta_{wh}$ | N/A | % |
| Täglicher Stromverbrauch | $Q_{elec}$ | N/A | kWh | Täglicher Kraftstoffverbrauch | $Q_{fuel}$ | N/A | kWh |
| Jährlicher Stromverbrauch | AEC | N/A | kWh | Jährlicher Kraftstoffverbrauch | AFC | N/A | GJ |
| Kontaktdetails | Siehe Rückseite des Handbuchs | | | | | | |

(*) Bei Raumheizgeräten mit Wärmepumpe und Kombiheizgeräten mit Wärmepumpe ist die Nennwärmeleistung Prated gleich der Auslegungslast zum Heizen Pdesignh, und die Nennwärmeleistung eines Zusatzheizgeräts Psup ist gleich der Zusatzleistung zum Heizen sup(Tj ). (**) Wenn Cdh nicht durch Messung bestimmt wird, ist der Standard-Degradationskoeffizient Cdh = 0,9.

# Technisch Parameter

| | |
|---|---|
| Modell(s): | 6kW (Heizung 3kW) ;6 kW |
| Luft-Wasser-Wärmepumpe | Ja |
| Wasser-Wasser-Wärmepumpe | nien |
| Sole/Wasser Wärmepumpe | nein |
| Niedertemperatur-Wärmepumpe | nein |
| Ausgestattet mit einer Zusatzheizung | Ja(für 6kW(Heizung 3kW))nein(für 6kW) |
| Kombiheizgerät mit Wärmepumpe | nein |
| Deklarierter Klimazustand; | kälter |
| Parameter sind für Anwendungen bei niedrigen Temperaturen deklariert. | |

| Artikel | Symbol | Wert | Einheit | Artikel | Symbol | Wert | Einheit |
|---|---|---|---|---|---|---|---|
| **Nennwärmeleistung (*)** | Bewertet | 6.0 | kW | **Saisonale Raumheizungs-Energieeffizienz** | $\eta_s$ | 166 | % |
| Angegebene Heizleistung bei Teillast bei Innentemperatur 20 °C und Außentemperatur $T_j$ | | | | Angegebene Heizleistung für Teillast bei Innentemperatur 20 °C und Außentemperatur $T_j$ | | | |
| $T_j$ = – 7°C | Bewertet | 3.6 | kW | $T_j$= – 7°C | COPd | 3.51 | - |
| $T_j$ = + 2°C | Pdh | 2.2 | kW | $T_j$ = + 2°C | COPd | 5.36 | - |
| $T_j$ = +7°C | Pdh | 1.5 | kW | $T_j$= +7°C | COPd | 6.66 | - |
| $T_j$ = + 12°C | Pdh | 1.6 | kW | $T_j$ = + 12°C | COPd | 7.97 | - |
| $T_j$= zweiwertige Temperatur | Pdh | 4.9 | kW | $T_j$ = zweiwertige Temperatur | COPd | 2.39 | - |
| $T_j$= Betriebsgrenztemperatur | Pdh | 3.6 | kW | $T_j$ = Betriebsgrenztemperatur | COPd | 1.78 | - |
| Für Luft/Wasser-Wärmepumpen: $T_j$ = – 15 °C (wenn TOL < – 20 °C) | Pdh | N/A | kW | Für Luft/Wasser-Wärmepumpen: Tj = – 15 °C (wenn TOL < – 20 °C) | COPd | N/A | - |
| Zweiwertige Temperatur | $T_{biv}$ | -15 | °C | Für Luft/Wasser-Wärmepumpen: Betriebsgrenztemperatur | TOL | -22 | °C |
| Zyklusintervallkapazität für Heizung | $P_{cych}$ | N/A | kW | Zyklus-Intervall-Effizienz | $COP_{cyc}$ | N/A | - |
| Abbaukoeffizient (**) | $C_{dh}$ | 0.9 | kW | Betriebsgrenztemperatur Heizwasser | WTOL | 65 | °C |
| Stromverbrauch in anderen Modi als dem aktiven Modus | | | | Zusatzheizung | | | |
| Aus-Modus | $P_{OFF}$ | 0.010 | kW | | | | |
| Thermostat-Aus-Modus | $P_{TO}$ | 0.010 | kW | Nennwärmeleistung (**) | $P_{sup}$ | 2.4 | kW |
| Standby Modus | $P_{SB}$ | 0.010 | kW | | | | |
| Kurbelgehäuseheizungsmodus | $P_{CK}$ | 0.000 | kW | Art der Energiezufuhr | Elektrisch | | |

| | | | | | | | |
|---|---|---|---|---|---|---|---|
| **Andere Dinge** | | | | | | | |
| Kapazitätskontrolle | Variable | | | Bei Luft/Wasser-Wärmepumpen: Nennluftvolumenstrom, außen | - | 2800 | $m^3/h$ |
| Schallleistungspegel, innen/außen | $L_{WA}$ | -/59 | dB | Für Wasser- oder Sole/Wasser-Wärmepumpen: Sole- oder Wasser- Nennvolumenstrom Außenwärmetauscher | - | N/A | $m^3/h$ |
| Jährlicher Energieverbrauch | $Q_{HE}$ | 3515 | kWh | | | | |
| Für Kombiheizgeräte mit Wärmepumpe: | | | | | | | |
| **Deklariertes Lastprofil** | N/A | | | **Energieeffizienz der Warmwasserbereitung** | $\eta_{wh}$ | N/A | % |
| Täglicher Stromverbrauch | $Q_{elec}$ | N/A | kWh | Täglicher Kraftstoffverbrauch | $Q_{fuel}$ | N/A | kWh |
| Jährlicher Stromverbrauch | AEC | N/A | kWh | Jährlicher Kraftstoffverbrauch | AFC | N/A | GJ |
| Kontaktdetails | Siehe Rückseite des Handbuchs | | | | | | |

(*) Bei Raumheizgeräten mit Wärmepumpe und Kombiheizgeräten mit Wärmepumpe ist die Nennwärmeleistung Prated gleich der Auslegungslast zum Heizen Pdesignh, und die Nennwärmeleistung eines Zusatzheizgeräts Psup ist gleich der Zusatzleistung zum Heizen sup(Tj ). (**) Wenn Cdh nicht durch Messung bestimmt wird, ist der Standard-Degradationskoeffizient Cdh = 0,9.

# Technisch Parameter

| | |
|---|---|
| Modell(s): | 6kW (Heizung 3kW) ;6 kW |
| Luft-Wasser-Wärmepumpe | Ja |
| Wasser-Wasser-Wärmepumpe | nien |
| Sole/Wasser Wärmepumpe | nein |
| Niedertemperatur-Wärmepumpe | nein |
| Ausgestattet mit einer Zusatzheizung | Ja(für 4kW(Heizung 3kW))nein(für 4kW) |
| Kombiheizgerät mit Wärmepumpe | nein |
| Deklarierter Klimazustand; | Durchschnitt |
| Parameter werden für die Anwendung bei mittlerer Temperatur deklariert. | |

| Artikel | Symbol | Wert | Einheit | Artikel | Symbol | Wert | Einheit |
|---|---|---|---|---|---|---|---|
| **Nennwärmeleistung (*)** | Bewertet | 6.0 | kW | **Saisonale Raumheizungs-Energieeffizienz** | $\eta_s$ | 137 | % |
| Angegebene Heizleistung bei Teillast bei Innentemperatur 20 °C und Außentemperatur $T_j$ | | | | Angegebene Heizleistung für Teillast bei Innentemperatur 20 °C und Außentemperatur $T_j$ | | | |
| $T_j$ = – 7°C | Bewertet | 5.3 | kW | $T_j$= – 7°C | COPd | 2.12 | - |
| $T_j$ = + 2°C | Pdh | 3.2 | kW | $T_j$ = + 2°C | COPd | 3.43 | - |
| $T_j$ = +7°C | Pdh | 2.1 | kW | $T_j$= +7°C | COPd | 4.63 | - |
| $T_j$ = + 12°C | Pdh | 1.4 | kW | $T_j$ = + 12°C | COPd | 5.70 | - |
| $T_j$= zweiwertige Temperatur | Pdh | 5.3 | kW | $T_j$ = zweiwertige Temperatur | COPd | 2.12 | - |
| $T_j$= Betriebsgrenztemperatur | Pdh | 5.0 | kW | $T_j$ = Betriebsgrenztemperatur | COPd | 1.81 | - |
| Für Luft/Wasser-Wärmepumpen: $T_j$ = – 15 °C (wenn TOL < – 20 °C) | Pdh | N/A | kW | Für Luft/Wasser-Wärmepumpen: Tj = – 15 °C (wenn TOL < – 20 °C) | COPd | N/A | - |
| Zweiwertige Temperatur | $T_{biv}$ | -7 | °C | Für Luft/Wasser-Wärmepumpen: Betriebsgrenztemperatur | TOL | -10 | °C |
| Zyklusintervallkapazität für Heizung | $P_{cych}$ | N/A | kW | Zyklus-Intervall-Effizienz | $COP_{cyc}$ | N/A | - |
| Abbaukoeffizient (**) | $C_{dh}$ | 0.9 | kW | Betriebsgrenztemperatur Heizwasser | WTOL | 65 | °C |
| Stromverbrauch in anderen Modi als dem aktiven Modus | | | | Zusatzheizung | | | |
| Aus-Modus | $P_{OFF}$ | 0.010 | kW | | | | |
| Thermostat-Aus-Modus | $P_{TO}$ | 0.010 | kW | Nennwärmeleistung (**) | $P_{sup}$ | 1.0 | kW |
| Standby Modus | $P_{SB}$ | 0.010 | kW | | | | |
| Kurbelgehäuseheizungsmodus | $P_{CK}$ | 0.000 | kW | Art der Energiezufuhr | Elektrisch | | |

| | | | | | | | |
|---|---|---|---|---|---|---|---|
| **Andere Dinge** | | | | | | | |
| Kapazitätskontrolle | Variable | | | Bei Luft/Wasser-Wärmepumpen: Nennluftvolumenstrom, außen | - | 2800 | $m^3/h$ |
| Schallleistungspegel, innen/außen | $L_{WA}$ | -/59 | dB | Für Wasser- oder Sole/Wasser-Wärmepumpen: Sole- oder Wasser- Nennvolumenstrom Außenwärmetauscher | - | N/A | $m^3/h$ |
| Jährlicher Energieverbrauch | $Q_{HE}$ | 3557 | kWh | | | | |
| Für Kombiheizgeräte mit Wärmepumpe: | | | | | | | |
| **Deklariertes Lastprofil** | N/A | | | **Energieeffizienz der Warmwasserbereitung** | $\eta_{wh}$ | N/A | % |
| Täglicher Stromverbrauch | $Q_{elec}$ | N/A | kWh | Täglicher Kraftstoffverbrauch | $Q_{fuel}$ | N/A | kWh |
| Jährlicher Stromverbrauch | AEC | N/A | kWh | Jährlicher Kraftstoffverbrauch | AFC | N/A | GJ |
| Kontaktdetails | Siehe Rückseite des Handbuchs | | | | | | |

(*) Bei Raumheizgeräten mit Wärmepumpe und Kombiheizgeräten mit Wärmepumpe ist die Nennwärmeleistung Prated gleich der Auslegungslast zum Heizen Pdesignh, und die Nennwärmeleistung eines Zusatzheizgeräts Psup ist gleich der Zusatzleistung zum Heizen sup(Tj ). (**) Wenn Cdh nicht durch Messung bestimmt wird, ist der Standard-Degradationskoeffizient Cdh = 0,9.

# Technisch Parameter

| | |
|---|---|
| Modell(s): | 6kW (Heizung 3kW) ;6kW |
| Luft-Wasser-Wärmepumpe | Ja |
| Wasser-Wasser-Wärmepumpe | nien |
| Sole/Wasser Wärmepumpe | nein |
| Niedertemperatur-Wärmepumpe | nein |
| Ausgestattet mit einer Zusatzheizung | Ja(für 6kW(Heizung 3kW))nein(für 6kW) |
| Kombiheizgerät mit Wärmepumpe | nein |
| Deklarierter Klimazustand; | Wärmer |
| Parameter werden für die Anwendung bei mittlerer Temperatur deklariert. | |

| Artikel | Symbol | Wert | Einheit | Artikel | Symbol | Wert | Einheit |
|---|---|---|---|---|---|---|---|
| **Nennwärmeleistung (*)** | Bewertet | 5.0 | kW | **Saisonale Raumheizungs-Energieeffizienz** | $\eta_s$ | 167 | % |
| Angegebene Heizleistung bei Teillast bei Innentemperatur 20 °C und Außentemperatur $T_j$ | | | | Angegebene Heizleistung für Teillast bei Innentemperatur 20 °C und Außentemperatur $T_j$ | | | |
| $T_j$ = – 7°C | Bewertet | N/A | kW | $T_j$= – 7°C | COPd | N/A | - |
| $T_j$ = + 2°C | Pdh | 5.0 | kW | $T_j$ = + 2°C | COPd | 2.37 | - |
| $T_j$ = +7°C | Pdh | 3.2 | kW | $T_j$= +7°C | COPd | 3.72 | - |
| $T_j$ = + 12°C | Pdh | 1.6 | kW | $T_j$ = + 12°C | COPd | 5.41 | - |
| $T_j$= zweiwertige Temperatur | Pdh | 3.2 | kW | $T_j$ = zweiwertige Temperatur | COPd | 3.72 | - |
| $T_j$= Betriebsgrenztemperatur | Pdh | 5.0 | kW | $T_j$ = Betriebsgrenztemperatur | COPd | 2.37 | - |
| Für Luft/Wasser-Wärmepumpen: $T_j$ = – 15 °C (wenn TOL < – 20 °C) | Pdh | N/A | kW | Für Luft/Wasser-Wärmepumpen: Tj = – 15 °C (wenn TOL < – 20 °C) | COPd | N/A | - |
| Zweiwertige Temperatur | $T_{biv}$ | 7 | °C | Für Luft/Wasser-Wärmepumpen: Betriebsgrenztemperatur | TOL | 2 | °C |
| Zyklusintervallkapazität für Heizung | $P_{cych}$ | N/A | kW | Zyklus-Intervall-Effizienz | $COP_{cyc}$ | N/A | - |
| Abbaukoeffizient (**) | $C_{dh}$ | 0.9 | kW | Betriebsgrenztemperatur Heizwasser | WTOL | 65 | °C |
| Stromverbrauch in anderen Modi als dem aktiven Modus | | | | Zusatzheizung | | | |
| Aus-Modus | $P_{OFF}$ | 0.010 | kW | | | | |
| Thermostat-Aus-Modus | $P_{TO}$ | 0.010 | kW | Nennwärmeleistung (**) | $P_{sup}$ | 0.0 | kW |
| Standby Modus | $P_{SB}$ | 0.010 | kW | | | | |
| Kurbelgehäuseheizungsmodus | $P_{CK}$ | 0.000 | kW | Art der Energiezufuhr | Elektrisch | | |

| | | | | | | | |
|---|---|---|---|---|---|---|---|
| **Andere Dinge** | | | | | | | |
| Kapazitätskontrolle | Variable | | | Bei Luft/Wasser-Wärmepumpen: Nennluftvolumenstrom, außen | - | 2800 | $m^3/h$ |
| Schallleistungspegel, innen/außen | $L_{WA}$ | -/59 | dB | Für Wasser- oder Sole/Wasser-Wärmepumpen: Sole- oder Wasser- Nennvolumenstrom Außenwärmetauscher | - | N/A | $m^3/h$ |
| Jährlicher Energieverbrauch | $Q_{HE}$ | 1580 | kWh | | | | |
| Für Kombiheizgeräte mit Wärmepumpe: | | | | | | | |
| **Deklariertes Lastprofil** | N/A | | | **Energieeffizienz der Warmwasserbereitung** | $\eta_{wh}$ | N/A | % |
| Täglicher Stromverbrauch | $Q_{elec}$ | N/A | kWh | Täglicher Kraftstoffverbrauch | $Q_{fuel}$ | N/A | kWh |
| Jährlicher Stromverbrauch | AEC | N/A | kWh | Jährlicher Kraftstoffverbrauch | AFC | N/A | GJ |
| Kontaktdetails | Siehe Rückseite des Handbuchs | | | | | | |

(*) Bei Raumheizgeräten mit Wärmepumpe und Kombiheizgeräten mit Wärmepumpe ist die Nennwärmeleistung Prated gleich der Auslegungslast zum Heizen Pdesignh, und die Nennwärmeleistung eines Zusatzheizgeräts Psup ist gleich der Zusatzleistung zum Heizen sup(Tj ). (**) Wenn Cdh nicht durch Messung bestimmt wird, ist der Standard-Degradationskoeffizient Cdh = 0,9.

# Technisch Parameter

| | |
|---|---|
| Modell(s): | 6kW (Heizung 3kW) ;6kW |
| Luft-Wasser-Wärmepumpe | Ja |
| Wasser-Wasser-Wärmepumpe | nien |
| Sole/Wasser Wärmepumpe | nein |
| Niedertemperatur-Wärmepumpe | nein |
| Ausgestattet mit einer Zusatzheizung | Ja(für 6kW(Heizung 3kW))nein(für 6kW) |
| Kombiheizgerät mit Wärmepumpe | nein |
| Deklarierter Klimazustand; | kälter |
| Parameter werden für die Anwendung bei mittlerer Temperatur deklariert. | |

| Artikel | Symbol | Wert | Einheit | Artikel | Symbol | Wert | Einheit |
|---|---|---|---|---|---|---|---|
| **Nennwärmeleistung (*)** | Bewertet | 5.0 | kW | **Saisonale Raumheizungs-Energieeffizienz** | $\eta_s$ | 113 | % |
| Angegebene Heizleistung bei Teillast bei Innentemperatur 20 °C und Außentemperatur $T_j$ | | | | Angegebene Heizleistung für Teillast bei Innentemperatur 20 °C und Außentemperatur $T_j$ | | | |
| $T_j$ = – 7°C | Bewertet | 3.1 | kW | $T_j$= – 7°C | COPd | 2.49 | - |
| $T_j$ = + 2°C | Pdh | 1.8 | kW | $T_j$ = + 2°C | COPd | 3.52 | - |
| $T_j$ = +7°C | Pdh | 1.2 | kW | $T_j$= +7°C | COPd | 4.10 | - |
| $T_j$ = + 12°C | Pdh | 1.4 | kW | $T_j$ = + 12°C | COPd | 6.18 | - |
| $T_j$= zweiwertige Temperatur | Pdh | 4.0 | kW | $T_j$ = zweiwertige Temperatur | COPd | 1.74 | - |
| $T_j$= Betriebsgrenztemperatur | Pdh | 2.5 | kW | $T_j$ = Betriebsgrenztemperatur | COPd | 1.17 | - |
| Für Luft/Wasser-Wärmepumpen: $T_j$ = – 15 °C (wenn TOL < – 20 °C) | Pdh | N/A | kW | Für Luft/Wasser-Wärmepumpen: Tj = – 15 °C (wenn TOL < – 20 °C) | COPd | N/A | - |
| Zweiwertige Temperatur | $T_{biv}$ | -15 | °C | Für Luft/Wasser-Wärmepumpen: Betriebsgrenztemperatur | TOL | -22 | °C |
| Zyklusintervallkapazität für Heizung | $P_{cych}$ | N/A | kW | Zyklus-Intervall-Effizienz | $COP_{cyc}$ | N/A | - |
| Abbaukoeffizient (**) | $C_{dh}$ | 0.9 | kW | Betriebsgrenztemperatur Heizwasser | WTOL | 65 | °C |
| Stromverbrauch in anderen Modi als dem aktiven Modus | | | | Zusatzheizung | | | |
| Aus-Modus | $P_{OFF}$ | 0.010 | kW | | | | |
| Thermostat-Aus-Modus | $P_{TO}$ | 0.010 | kW | Nennwärmeleistung (**) | $P_{sup}$ | 2.5 | kW |
| Standby Modus | $P_{SB}$ | 0.010 | kW | | | | |
| Kurbelgehäuseheizungsmodus | $P_{CK}$ | 0.000 | kW | Art der Energiezufuhr | Elektrisch | | |

| | | | | | | | |
|---|---|---|---|---|---|---|---|
| **Andere Dinge** | | | | | | | |
| Kapazitätskontrolle | Variable | | | Bei Luft/Wasser-Wärmepumpen: Nennluftvolumenstrom, außen | - | 2800 | $m^3/h$ |
| Schallleistungspegel, innen/außen | $L_{WA}$ | -/59 | dB | Für Wasser- oder Sole/Wasser-Wärmepumpen: Sole- oder Wasser- Nennvolumenstrom Außenwärmetauscher | - | N/A | $m^3/h$ |
| Jährlicher Energieverbrauch | $Q_{HE}$ | 4204 | kWh | | | | |
| Für Kombiheizgeräte mit Wärmepumpe: | | | | | | | |
| **Deklariertes Lastprofil** | N/A | | | **Energieeffizienz der Warmwasserbereitung** | $\eta_{wh}$ | N/A | % |
| Täglicher Stromverbrauch | $Q_{elec}$ | N/A | kWh | Täglicher Kraftstoffverbrauch | $Q_{fuel}$ | N/A | kWh |
| Jährlicher Stromverbrauch | AEC | N/A | kWh | Jährlicher Kraftstoffverbrauch | AFC | N/A | GJ |
| Kontaktdetails | Siehe Rückseite des Handbuchs | | | | | | |

(*) Bei Raumheizgeräten mit Wärmepumpe und Kombiheizgeräten mit Wärmepumpe ist die Nennwärmeleistung Prated gleich der Auslegungslast zum Heizen Pdesignh, und die Nennwärmeleistung eines Zusatzheizgeräts Psup ist gleich der Zusatzleistung zum Heizen sup(Tj ). (**) Wenn Cdh nicht durch Messung bestimmt wird, ist der Standard-Degradationskoeffizient Cdh = 0,9.

# Technisch Parameter

| | |
|---|---|
| Modell(s): | 8kW (Heizung 3kW) ;8kW |
| Luft-Wasser-Wärmepumpe | Ja |
| Wasser-Wasser-Wärmepumpe | nien |
| Sole/Wasser Wärmepumpe | nein |
| Niedertemperatur-Wärmepumpe | nein |
| Ausgestattet mit einer Zusatzheizung | Ja(für 8kW(Heizung 3kW))nein(für 8kW) |
| Kombiheizgerät mit Wärmepumpe | nein |
| Deklarierter Klimazustand; | Durchschnitt |
| Parameter sind für Anwendungen bei niedrigen Temperaturen deklariert. | |

| Artikel | Symbol | Wert | Einheit | Artikel | Symbol | Wert | Einheit |
|---|---|---|---|---|---|---|---|
| **Nennwärmeleistung (*)** | Bewertet | 8 | kW | **Saisonale Raumheizungs-Energieeffizienz** | $\eta_s$ | 200 | % |
| Angegebene Heizleistung bei Teillast bei Innentemperatur 20 °C und Außentemperatur $T_j$ | | | | Angegebene Heizleistung für Teillast bei Innentemperatur 20 °C und Außentemperatur $T_j$ | | | |
| $T_j$ = – 7°C | Bewertet | 7.1 | kW | $T_j$= – 7°C | COPd | 3.12 | - |
| $T_j$ = + 2°C | Pdh | 4.7 | kW | $T_j$ = + 2°C | COPd | 4.99 | - |
| $T_j$ = +7°C | Pdh | 3.0 | kW | $T_j$= +7°C | COPd | 6.81 | - |
| $T_j$ = + 12°C | Pdh | 1.7 | kW | $T_j$ = + 12°C | COPd | 8.00 | - |
| $T_j$= zweiwertige Temperatur | Pdh | 7.1 | kW | $T_j$ = zweiwertige Temperatur | COPd | 3.12 | - |
| $T_j$= Betriebsgrenztemperatur | Pdh | 6.5 | kW | $T_j$ = Betriebsgrenztemperatur | COPd | 2.84 | - |
| Für Luft/Wasser-Wärmepumpen: $T_j$ = – 15 °C (wenn TOL < – 20 °C) | Pdh | N/A | kW | Für Luft/Wasser-Wärmepumpen: Tj = – 15 °C (wenn TOL < – 20 °C) | COPd | N/A | - |
| Zweiwertige Temperatur | $T_{biv}$ | -7 | °C | Für Luft/Wasser-Wärmepumpen: Betriebsgrenztemperatur | TOL | -10 | °C |
| Zyklusintervallkapazität für Heizung | $P_{cych}$ | N/A | kW | Zyklus-Intervall-Effizienz | $COP_{cyc}$ | N/A | - |
| Abbaukoeffizient (**) | $C_{dh}$ | 0.9 | kW | Betriebsgrenztemperatur Heizwasser | WTOL | 65 | °C |
| Stromverbrauch in anderen Modi als dem aktiven Modus | | | | Zusatzheizung | | | |
| Aus-Modus | $P_{OFF}$ | 0.014 | kW | | | | |
| Thermostat-Aus-Modus | $P_{TO}$ | 0.024 | kW | Nennwärmeleistung (**) | $P_{sup}$ | 1.5 | kW |
| Standby Modus | $P_{SB}$ | 0.014 | kW | | | | |
| Kurbelgehäuseheizungsmodus | $P_{CK}$ | 0.000 | kW | Art der Energiezufuhr | Elektrisch | | |

| | | | | | | | |
|---|---|---|---|---|---|---|---|
| **Andere Dinge** | | | | | | | |
| Kapazitätskontrolle | Variable | | | Bei Luft/Wasser-Wärmepumpen: Nennluftvolumenstrom, außen | - | 4000 | $m^3/h$ |
| Schallleistungspegel, innen/außen | $L_{WA}$ | -/60 | dB | Für Wasser- oder Sole/Wasser-Wärmepumpen: Sole- oder Wasser- Nennvolumenstrom Außenwärmetauscher | - | N/A | $m^3/h$ |
| Jährlicher Energieverbrauch | $Q_{HE}$ | 3276 | kWh | | | | |
| Für Kombiheizgeräte mit Wärmepumpe: | | | | | | | |
| **Deklariertes Lastprofil** | N/A | | | **Energieeffizienz der Warmwasserbereitung** | $\eta_{wh}$ | N/A | % |
| Täglicher Stromverbrauch | $Q_{elec}$ | N/A | kWh | Täglicher Kraftstoffverbrauch | $Q_{fuel}$ | N/A | kWh |
| Jährlicher Stromverbrauch | AEC | N/A | kWh | Jährlicher Kraftstoffverbrauch | AFC | N/A | GJ |
| Kontaktdetails | Siehe Rückseite des Handbuchs | | | | | | |

(*) Bei Raumheizgeräten mit Wärmepumpe und Kombiheizgeräten mit Wärmepumpe ist die Nennwärmeleistung Prated gleich der Auslegungslast zum Heizen Pdesignh, und die Nennwärmeleistung eines Zusatzheizgeräts Psup ist gleich der Zusatzleistung zum Heizen sup(Tj ). (**) Wenn Cdh nicht durch Messung bestimmt wird, ist der Standard-Degradationskoeffizient Cdh = 0,9.

# Technisch Parameter

| | |
|---|---|
| Modell(s): | 8kW (Heizung 3kW) ;8kW |
| Luft-Wasser-Wärmepumpe | Ja |
| Wasser-Wasser-Wärmepumpe | nien |
| Sole/Wasser Wärmepumpe | nein |
| Niedertemperatur-Wärmepumpe | nein |
| Ausgestattet mit einer Zusatzheizung | Ja(für 8kW(Heizung 3kW))nein(für 8kW) |
| Kombiheizgerät mit Wärmepumpe | nein |
| Deklarierter Klimazustand; | Wärmer |
| Parameter sind für Anwendungen bei niedrigen Temperaturen deklariert. | |

| Artikel | Symbol | Wert | Einheit | Artikel | Symbol | Wert | Einheit |
|---|---|---|---|---|---|---|---|
| **Nennwärmeleistung (*)** | Bewertet | 8 | kW | **Saisonale Raumheizungs-Energieeffizienz** | $\eta_s$ | 278 | % |
| Angegebene Heizleistung bei Teillast bei Innentemperatur 20 °C und Außentemperatur $T_j$ | | | | Angegebene Heizleistung für Teillast bei Innentemperatur 20 °C und Außentemperatur $T_j$ | | | |
| $T_j$ = – 7°C | Bewertet | N/A | kW | $T_j$= – 7°C | COPd | N/A | - |
| $T_j$ = + 2°C | Pdh | 7.7 | kW | $T_j$ = + 2°C | COPd | 3.82 | - |
| $T_j$ = +7°C | Pdh | 5.0 | kW | $T_j$= +7°C | COPd | 6.12 | - |
| $T_j$ = + 12°C | Pdh | 2.6 | kW | $T_j$ = + 12°C | COPd | 9.15 | - |
| $T_j$= zweiwertige Temperatur | Pdh | 5.0 | kW | $T_j$ = zweiwertige Temperatur | COPd | 6.12 | - |
| $T_j$= Betriebsgrenztemperatur | Pdh | 7.7 | kW | $T_j$ = Betriebsgrenztemperatur | COPd | 3.82 | - |
| Für Luft/Wasser-Wärmepumpen: $T_j$ = – 15 °C (wenn TOL < – 20 °C) | Pdh | N/A | kW | Für Luft/Wasser-Wärmepumpen: Tj = – 15 °C (wenn TOL < – 20 °C) | COPd | N/A | - |
| Zweiwertige Temperatur | $T_{biv}$ | 7 | °C | Für Luft/Wasser-Wärmepumpen: Betriebsgrenztemperatur | TOL | 2 | °C |
| Zyklusintervallkapazität für Heizung | $P_{cych}$ | N/A | kW | Zyklus-Intervall-Effizienz | $COP_{cyc}$ | N/A | - |
| Abbaukoeffizient (**) | $C_{dh}$ | 0.9 | kW | Betriebsgrenztemperatur Heizwasser | WTOL | 65 | °C |
| Stromverbrauch in anderen Modi als dem aktiven Modus | | | | Zusatzheizung | | | |
| Aus-Modus | $P_{OFF}$ | 0.014 | kW | | | | |
| Thermostat-Aus-Modus | $P_{TO}$ | 0.024 | kW | Nennwärmeleistung (**) | $P_{sup}$ | 0.3 | kW |
| Standby Modus | $P_{SB}$ | 0.014 | kW | | | | |
| Kurbelgehäuseheizungsmodus | $P_{CK}$ | 0.000 | kW | Art der Energiezufuhr | Elektrisch | | |

| | | | | | | | |
|---|---|---|---|---|---|---|---|
| **Andere Dinge** | | | | | | | |
| Kapazitätskontrolle | Variable | | | Bei Luft/Wasser-Wärmepumpen: Nennluftvolumenstrom, außen | - | 4000 | $m^3/h$ |
| Schallleistungspegel, innen/außen | $L_{WA}$ | -/60 | dB | Für Wasser- oder Sole/Wasser-Wärmepumpen: Sole- oder Wasser- Nennvolumenstrom Außenwärmetauscher | - | N/A | $m^3/h$ |
| Jährlicher Energieverbrauch | $Q_{HE}$ | 1492 | kWh | | | | |
| Für Kombiheizgeräte mit Wärmepumpe: | | | | | | | |
| **Deklariertes Lastprofil** | N/A | | | **Energieeffizienz der Warmwasserbereitung** | $\eta_{wh}$ | N/A | % |
| Täglicher Stromverbrauch | $Q_{elec}$ | N/A | kWh | Täglicher Kraftstoffverbrauch | $Q_{fuel}$ | N/A | kWh |
| Jährlicher Stromverbrauch | AEC | N/A | kWh | Jährlicher Kraftstoffverbrauch | AFC | N/A | GJ |
| Kontaktdetails | Siehe Rückseite des Handbuchs | | | | | | |

(*) Bei Raumheizgeräten mit Wärmepumpe und Kombiheizgeräten mit Wärmepumpe ist die Nennwärmeleistung Prated gleich der Auslegungslast zum Heizen Pdesignh, und die Nennwärmeleistung eines Zusatzheizgeräts Psup ist gleich der Zusatzleistung zum Heizen sup(Tj ). (**) Wenn Cdh nicht durch Messung bestimmt wird, ist der Standard-Degradationskoeffizient Cdh = 0,9.

# Technisch Parameter

| | |
|---|---|
| Modell(s): | 8kW (Heizung 3kW) ;8kW |
| Luft-Wasser-Wärmepumpe | Ja |
| Wasser-Wasser-Wärmepumpe | nien |
| Sole/Wasser Wärmepumpe | nein |
| Niedertemperatur-Wärmepumpe | nein |
| Ausgestattet mit einer Zusatzheizung | Ja(für 8kW(Heizung 3kW))nein(für 8kW) |
| Kombiheizgerät mit Wärmepumpe | nein |
| Deklarierter Klimazustand; | kälter |
| Parameter sind für Anwendungen bei niedrigen Temperaturen deklariert. | |

| Artikel | Symbol | Wert | Einheit | Artikel | Symbol | Wert | Einheit |
|---|---|---|---|---|---|---|---|
| **Nennwärmeleistung (*)** | Bewertet | 7 | kW | **Saisonale Raumheizungs-Energieeffizienz** | $\eta_s$ | 167 | % |
| Angegebene Heizleistung bei Teillast bei Innentemperatur 20 °C und Außentemperatur $T_j$ | | | | Angegebene Heizleistung für Teillast bei Innentemperatur 20 °C und Außentemperatur $T_j$ | | | |
| $T_j$ = – 7°C | Bewertet | 4.4 | kW | $T_j$= – 7°C | COPd | 3.59 | - |
| $T_j$ = + 2°C | Pdh | 2.6 | kW | $T_j$ = + 2°C | COPd | 5.30 | - |
| $T_j$ = +7°C | Pdh | 1.6 | kW | $T_j$= +7°C | COPd | 5.98 | - |
| $T_j$ = + 12°C | Pdh | 1.9 | kW | $T_j$ = + 12°C | COPd | 8.42 | - |
| $T_j$= zweiwertige Temperatur | Pdh | 5.7 | kW | $T_j$ = zweiwertige Temperatur | COPd | 2.61 | - |
| $T_j$= Betriebsgrenztemperatur | Pdh | 4.0 | kW | $T_j$ = Betriebsgrenztemperatur | COPd | 1.93 | - |
| Für Luft/Wasser-Wärmepumpen: $T_j$ = – 15 °C (wenn TOL < – 20 °C) | Pdh | N/A | kW | Für Luft/Wasser-Wärmepumpen: Tj = – 15 °C (wenn TOL < – 20 °C) | COPd | N/A | - |
| Zweiwertige Temperatur | $T_{biv}$ | -15 | °C | Für Luft/Wasser-Wärmepumpen: Betriebsgrenztemperatur | TOL | -22 | °C |
| Zyklusintervallkapazität für Heizung | $P_{cych}$ | N/A | kW | Zyklus-Intervall-Effizienz | $COP_{cyc}$ | N/A | - |
| Abbaukoeffizient (**) | $C_{dh}$ | 0.9 | kW | Betriebsgrenztemperatur Heizwasser | WTOL | 65 | °C |
| Stromverbrauch in anderen Modi als dem aktiven Modus | | | | Zusatzheizung | | | |
| Aus-Modus | $P_{OFF}$ | 0.014 | kW | | | | |
| Thermostat-Aus-Modus | $P_{TO}$ | 0.024 | kW | Nennwärmeleistung (**) | $P_{sup}$ | 3.0 | kW |
| Standby Modus | $P_{SB}$ | 0.014 | kW | | | | |
| Kurbelgehäuseheizungsmodus | $P_{CK}$ | 0.000 | kW | Art der Energiezufuhr | Elektrisch | | |

| | | | | | | | |
|---|---|---|---|---|---|---|---|
| **Andere Dinge** | | | | | | | |
| Kapazitätskontrolle | Variable | | | Bei Luft/Wasser-Wärmepumpen: Nennluftvolumenstrom, außen | - | 4000 | $m^3/h$ |
| Schallleistungspegel, innen/außen | $L_{WA}$ | -/60 | dB | Für Wasser- oder Sole/Wasser-Wärmepumpen: Sole- oder Wasser- Nennvolumenstrom Außenwärmetauscher | - | N/A | $m^3/h$ |
| Jährlicher Energieverbrauch | $Q_{HE}$ | 4044 | kWh | | | | |
| Für Kombiheizgeräte mit Wärmepumpe: | | | | | | | |
| **Deklariertes Lastprofil** | N/A | | | **Energieeffizienz der Warmwasserbereitung** | $\eta_{wh}$ | N/A | % |
| Täglicher Stromverbrauch | $Q_{elec}$ | N/A | kWh | Täglicher Kraftstoffverbrauch | $Q_{fuel}$ | N/A | kWh |
| Jährlicher Stromverbrauch | AEC | N/A | kWh | Jährlicher Kraftstoffverbrauch | AFC | N/A | GJ |
| Kontaktdetails | Siehe Rückseite des Handbuchs | | | | | | |

(*) Bei Raumheizgeräten mit Wärmepumpe und Kombiheizgeräten mit Wärmepumpe ist die Nennwärmeleistung Prated gleich der Auslegungslast zum Heizen Pdesignh, und die Nennwärmeleistung eines Zusatzheizgeräts Psup ist gleich der Zusatzleistung zum Heizen sup(Tj ). (**) Wenn Cdh nicht durch Messung bestimmt wird, ist der Standard-Degradationskoeffizient Cdh = 0,9.

# Technisch Parameter

| | |
|---|---|
| Modell(s): | 8kW (Heizung 3kW) ;8kW |
| Luft-Wasser-Wärmepumpe | Ja |
| Wasser-Wasser-Wärmepumpe | nien |
| Sole/Wasser Wärmepumpe | nein |
| Niedertemperatur-Wärmepumpe | nein |
| Ausgestattet mit einer Zusatzheizung | Ja(für 8kW(Heizung 3kW))nein(für 8kW) |
| Kombiheizgerät mit Wärmepumpe | nein |
| Deklarierter Klimazustand; | Durchschnitt |
| Parameter werden für die Anwendung bei mittlerer Temperatur deklariert. | |

| Artikel | Symbol | Wert | Einheit | Artikel | Symbol | Wert | Einheit |
|---|---|---|---|---|---|---|---|
| **Nennwärmeleistung (*)** | Bewertet | 7 | kW | **Saisonale Raumheizungs-Energieeffizienz** | $\eta_s$ | 136 | % |
| Angegebene Heizleistung bei Teillast bei Innentemperatur 20 °C und Außentemperatur $T_j$ | | | | Angegebene Heizleistung für Teillast bei Innentemperatur 20 °C und Außentemperatur $T_j$ | | | |
| $T_j$ = – 7°C | Bewertet | 5.8 | kW | $T_j$= – 7°C | COPd | 2.20 | - |
| $T_j$ = + 2°C | Pdh | 3.7 | kW | $T_j$ = + 2°C | COPd | 3.37 | - |
| $T_j$ = +7°C | Pdh | 2.4 | kW | $T_j$= +7°C | COPd | 4.57 | - |
| $T_j$ = + 12°C | Pdh | 1.6 | kW | $T_j$ = + 12°C | COPd | 5.87 | - |
| $T_j$= zweiwertige Temperatur | Pdh | 5.8 | kW | $T_j$ = zweiwertige Temperatur | COPd | 2.20 | - |
| $T_j$= Betriebsgrenztemperatur | Pdh | 5.0 | kW | $T_j$ = Betriebsgrenztemperatur | COPd | 1.84 | - |
| Für Luft/Wasser-Wärmepumpen: $T_j$ = – 15 °C (wenn TOL < – 20 °C) | Pdh | N/A | kW | Für Luft/Wasser-Wärmepumpen: Tj = – 15 °C (wenn TOL < – 20 °C) | COPd | N/A | - |
| Zweiwertige Temperatur | $T_{biv}$ | -7 | °C | Für Luft/Wasser-Wärmepumpen: Betriebsgrenztemperatur | TOL | -10 | °C |
| Zyklusintervallkapazität für Heizung | $P_{cych}$ | N/A | kW | Zyklus-Intervall-Effizienz | $COP_{cyc}$ | N/A | - |
| Abbaukoeffizient (**) | $C_{dh}$ | 0.9 | kW | Betriebsgrenztemperatur Heizwasser | WTOL | 65 | °C |
| Stromverbrauch in anderen Modi als dem aktiven Modus | | | | Zusatzheizung | | | |
| Aus-Modus | $P_{OFF}$ | 0.014 | kW | | | | |
| Thermostat-Aus-Modus | $P_{TO}$ | 0.024 | kW | Nennwärmeleistung (**) | $P_{sup}$ | 2.0 | kW |
| Standby Modus | $P_{SB}$ | 0.014 | kW | | | | |
| Kurbelgehäuseheizungsmodus | $P_{CK}$ | 0.000 | kW | Art der Energiezufuhr | Elektrisch | | |

| | | | | | | | |
|---|---|---|---|---|---|---|---|
| **Andere Dinge** | | | | | | | |
| Kapazitätskontrolle | Variable | | | Bei Luft/Wasser-Wärmepumpen: Nennluftvolumenstrom, außen | - | 4000 | $m^3/h$ |
| Schallleistungspegel, innen/außen | $L_{WA}$ | -/60 | dB | Für Wasser- oder Sole/Wasser-Wärmepumpen: Sole- oder Wasser- Nennvolumenstrom Außenwärmetauscher | - | N/A | $m^3/h$ |
| Jährlicher Energieverbrauch | $Q_{HE}$ | 3937 | kWh | | | | |
| Für Kombiheizgeräte mit Wärmepumpe: | | | | | | | |
| **Deklariertes Lastprofil** | N/A | | | **Energieeffizienz der Warmwasserbereitung** | $\eta_{wh}$ | N/A | % |
| Täglicher Stromverbrauch | $Q_{elec}$ | N/A | kWh | Täglicher Kraftstoffverbrauch | $Q_{fuel}$ | N/A | kWh |
| Jährlicher Stromverbrauch | AEC | N/A | kWh | Jährlicher Kraftstoffverbrauch | AFC | N/A | GJ |
| Kontaktdetails | Siehe Rückseite des Handbuchs | | | | | | |

(*) Bei Raumheizgeräten mit Wärmepumpe und Kombiheizgeräten mit Wärmepumpe ist die Nennwärmeleistung Prated gleich der Auslegungslast zum Heizen Pdesignh, und die Nennwärmeleistung eines Zusatzheizgeräts Psup ist gleich der Zusatzleistung zum Heizen sup(Tj ). (**) Wenn Cdh nicht durch Messung bestimmt wird, ist der Standard-Degradationskoeffizient Cdh = 0,9.

# Technisch Parameter

| | |
|---|---|
| Modell(s): | 8kW (Heizung 3kW) ;8kW |
| Luft-Wasser-Wärmepumpe | Ja |
| Wasser-Wasser-Wärmepumpe | nien |
| Sole/Wasser Wärmepumpe | nein |
| Niedertemperatur-Wärmepumpe | nein |
| Ausgestattet mit einer Zusatzheizung | Ja(für 8kW(Heizung 3kW))nein(für 8kW) |
| Kombiheizgerät mit Wärmepumpe | nein |
| Deklarierter Klimazustand; | Wärmer |
| Parameter werden für die Anwendung bei mittlerer Temperatur deklariert. | |

| Artikel | Symbol | Wert | Einheit | Artikel | Symbol | Wert | Einheit |
|---|---|---|---|---|---|---|---|
| **Nennwärmeleistung (*)** | Bewertet | 8 | kW | **Saisonale Raumheizungs-Energieeffizienz** | $\eta_s$ | 171 | % |
| Angegebene Heizleistung bei Teillast bei Innentemperatur 20 °C und Außentemperatur $T_j$ | | | | Angegebene Heizleistung für Teillast bei Innentemperatur 20 °C und Außentemperatur $T_j$ | | | |
| $T_j$ = – 7°C | Bewertet | N/A | kW | $T_j$= – 7°C | COPd | N/A | - |
| $T_j$ = + 2°C | Pdh | 7.4 | kW | $T_j$ = + 2°C | COPd | 2.52 | - |
| $T_j$ = +7°C | Pdh | 4.9 | kW | $T_j$= +7°C | COPd | 3.60 | - |
| $T_j$ = + 12°C | Pdh | 2.2 | kW | $T_j$ = + 12°C | COPd | 5.80 | - |
| $T_j$= zweiwertige Temperatur | Pdh | 4.9 | kW | $T_j$ = zweiwertige Temperatur | COPd | 3.60 | - |
| $T_j$= Betriebsgrenztemperatur | Pdh | 7.4 | kW | $T_j$ = Betriebsgrenztemperatur | COPd | 2.52 | - |
| Für Luft/Wasser-Wärmepumpen: $T_j$ = – 15 °C (wenn TOL < – 20 °C) | Pdh | N/A | kW | Für Luft/Wasser-Wärmepumpen: Tj = – 15 °C (wenn TOL < – 20 °C) | COPd | N/A | - |
| Zweiwertige Temperatur | $T_{biv}$ | 7 | °C | Für Luft/Wasser-Wärmepumpen: Betriebsgrenztemperatur | TOL | 2 | °C |
| Zyklusintervallkapazität für Heizung | $P_{cych}$ | N/A | kW | Zyklus-Intervall-Effizienz | $COP_{cyc}$ | N/A | - |
| Abbaukoeffizient (**) | $C_{dh}$ | 0.9 | kW | Betriebsgrenztemperatur Heizwasser | WTOL | 65 | °C |
| Stromverbrauch in anderen Modi als dem aktiven Modus | | | | Zusatzheizung | | | |
| Aus-Modus | $P_{OFF}$ | 0.014 | kW | | | | |
| Thermostat-Aus-Modus | $P_{TO}$ | 0.024 | kW | Nennwärmeleistung (**) | $P_{sup}$ | 0.6 | kW |
| Standby Modus | $P_{SB}$ | 0.014 | kW | | | | |
| Kurbelgehäuseheizungsmodus | $P_{CK}$ | 0.000 | kW | Art der Energiezufuhr | Elektrisch | | |

| | | | | | | | |
|---|---|---|---|---|---|---|---|
| **Andere Dinge** | | | | | | | |
| Kapazitätskontrolle | Variable | | | Bei Luft/Wasser-Wärmepumpen: Nennluftvolumenstrom, außen | - | 4000 | $m^3/h$ |
| Schallleistungspegel, innen/außen | $L_{WA}$ | -/60 | dB | Für Wasser- oder Sole/Wasser-Wärmepumpen: Sole- oder Wasser- Nennvolumenstrom Außenwärmetauscher | - | N/A | $m^3/h$ |
| Jährlicher Energieverbrauch | $Q_{HE}$ | 2347 | kWh | | | | |
| Für Kombiheizgeräte mit Wärmepumpe: | | | | | | | |
| **Deklariertes Lastprofil** | N/A | | | **Energieeffizienz der Warmwasserbereitung** | $\eta_{wh}$ | N/A | % |
| Täglicher Stromverbrauch | $Q_{elec}$ | N/A | kWh | Täglicher Kraftstoffverbrauch | $Q_{fuel}$ | N/A | kWh |
| Jährlicher Stromverbrauch | AEC | N/A | kWh | Jährlicher Kraftstoffverbrauch | AFC | N/A | GJ |
| Kontaktdetails | Siehe Rückseite des Handbuchs | | | | | | |

(*) Bei Raumheizgeräten mit Wärmepumpe und Kombiheizgeräten mit Wärmepumpe ist die Nennwärmeleistung Prated gleich der Auslegungslast zum Heizen Pdesignh, und die Nennwärmeleistung eines Zusatzheizgeräts Psup ist gleich der Zusatzleistung zum Heizen sup(Tj ). (**) Wenn Cdh nicht durch Messung bestimmt wird, ist der Standard-Degradationskoeffizient Cdh = 0,9.

# Technisch Parameter

| | |
|---|---|
| Modell(s): | 8kW (Heizung 3kW) ;8kW |
| Luft-Wasser-Wärmepumpe | Ja |
| Wasser-Wasser-Wärmepumpe | nien |
| Sole/Wasser Wärmepumpe | nein |
| Niedertemperatur-Wärmepumpe | nein |
| Ausgestattet mit einer Zusatzheizung | Ja(für 8kW(Heizung 3kW))nein(für 8kW) |
| Kombiheizgerät mit Wärmepumpe | nein |
| Deklarierter Klimazustand; | kälter |
| Parameter werden für die Anwendung bei mittlerer Temperatur deklariert. | |

| Artikel | Symbol | Wert | Einheit | Artikel | Symbol | Wert | Einheit |
|---|---|---|---|---|---|---|---|
| **Nennwärmeleistung (*)** | Bewertet | 6 | kW | **Saisonale Raumheizungs-Energieeffizienz** | $\eta_s$ | 115 | % |
| Angegebene Heizleistung bei Teillast bei Innentemperatur 20 °C und Außentemperatur $T_j$ | | | | Angegebene Heizleistung für Teillast bei Innentemperatur 20 °C und Außentemperatur $T_j$ | | | |
| $T_j$ = – 7°C | Bewertet | 3.8 | kW | $T_j$= – 7°C | COPd | 2.48 | - |
| $T_j$ = + 2°C | Pdh | 2.2 | kW | $T_j$ = + 2°C | COPd | 3.59 | - |
| $T_j$ = +7°C | Pdh | 1.4 | kW | $T_j$= +7°C | COPd | 4.08 | - |
| $T_j$ = + 12°C | Pdh | 1.5 | kW | $T_j$ = + 12°C | COPd | 6.01 | - |
| $T_j$= zweiwertige Temperatur | Pdh | 4.8 | kW | $T_j$ = zweiwertige Temperatur | COPd | 1.87 | - |
| $T_j$= Betriebsgrenztemperatur | Pdh | 3.2 | kW | $T_j$ = Betriebsgrenztemperatur | COPd | 1.31 | - |
| Für Luft/Wasser-Wärmepumpen: $T_j$ = – 15 °C (wenn TOL < – 20 °C) | Pdh | N/A | kW | Für Luft/Wasser-Wärmepumpen: Tj = – 15 °C (wenn TOL < – 20 °C) | COPd | N/A | - |
| Zweiwertige Temperatur | $T_{biv}$ | -15 | °C | Für Luft/Wasser-Wärmepumpen: Betriebsgrenztemperatur | TOL | -22 | °C |
| Zyklusintervallkapazität für Heizung | $P_{cych}$ | N/A | kW | Zyklus-Intervall-Effizienz | $COP_{cyc}$ | N/A | - |
| Abbaukoeffizient (**) | $C_{dh}$ | 0.9 | kW | Betriebsgrenztemperatur Heizwasser | WTOL | 65 | °C |
| Stromverbrauch in anderen Modi als dem aktiven Modus | | | | Zusatzheizung | | | |
| Aus-Modus | $P_{OFF}$ | 0.014 | kW | | | | |
| Thermostat-Aus-Modus | $P_{TO}$ | 0.024 | kW | Nennwärmeleistung (**) | $P_{sup}$ | 2.8 | kW |
| Standby Modus | $P_{SB}$ | 0.014 | kW | | | | |
| Kurbelgehäuseheizungsmodus | $P_{CK}$ | 0.000 | kW | Art der Energiezufuhr | Elektrisch | | |

| | | | | | | | |
|---|---|---|---|---|---|---|---|
| **Andere Dinge** | | | | | | | |
| Kapazitätskontrolle | Variable | | | Bei Luft/Wasser-Wärmepumpen: Nennluftvolumenstrom, außen | - | 4000 | $m^3/h$ |
| Schallleistungspegel, innen/außen | $L_{WA}$ | -/60 | dB | Für Wasser- oder Sole/Wasser-Wärmepumpen: Sole- oder Wasser- Nennvolumenstrom Außenwärmetauscher | - | N/A | $m^3/h$ |
| Jährlicher Energieverbrauch | $Q_{HE}$ | 4891 | kWh | | | | |
| Für Kombiheizgeräte mit Wärmepumpe: | | | | | | | |
| **Deklariertes Lastprofil** | N/A | | | **Energieeffizienz der Warmwasserbereitung** | $\eta_{wh}$ | N/A | % |
| Täglicher Stromverbrauch | $Q_{elec}$ | N/A | kWh | Täglicher Kraftstoffverbrauch | $Q_{fuel}$ | N/A | kWh |
| Jährlicher Stromverbrauch | AEC | N/A | kWh | Jährlicher Kraftstoffverbrauch | AFC | N/A | GJ |
| Kontaktdetails | Siehe Rückseite des Handbuchs | | | | | | |

(*) Bei Raumheizgeräten mit Wärmepumpe und Kombiheizgeräten mit Wärmepumpe ist die Nennwärmeleistung Prated gleich der Auslegungslast zum Heizen Pdesignh, und die Nennwärmeleistung eines Zusatzheizgeräts Psup ist gleich der Zusatzleistung zum Heizen sup(Tj ). (**) Wenn Cdh nicht durch Messung bestimmt wird, ist der Standard-Degradationskoeffizient Cdh = 0,9.

# Technisch Parameter

| | |
|---|---|
| Modell(s): | 10kW (Heizung 3kW) ;10kW |
| Luft-Wasser-Wärmepumpe | Ja |
| Wasser-Wasser-Wärmepumpe | nien |
| Sole/Wasser Wärmepumpe | nein |
| Niedertemperatur-Wärmepumpe | nein |
| Ausgestattet mit einer Zusatzheizung | Ja(für 8kW(Heizung 3kW))nein(für 8kW) |
| Kombiheizgerät mit Wärmepumpe | nein |
| Deklarierter Klimazustand; | Durchschnitt |
| Parameter sind für Anwendungen bei niedrigen Temperaturen deklariert. | |

| Artikel | Symbol | Wert | Einheit | Artikel | Symbol | Wert | Einheit |
|---|---|---|---|---|---|---|---|
| **Nennwärmeleistung (*)** | Bewertet | 9 | kW | **Saisonale Raumheizungs-Energieeffizienz** | $\eta_s$ | 199 | % |
| Angegebene Heizleistung bei Teillast bei Innentemperatur 20 °C und Außentemperatur $T_j$ | | | | Angegebene Heizleistung für Teillast bei Innentemperatur 20 °C und Außentemperatur $T_j$ | | | |
| $T_j$ = – 7°C | Bewertet | 8.0 | kW | $T_j$= – 7°C | COPd | 2.99 | - |
| $T_j$ = + 2°C | Pdh | 5.0 | kW | $T_j$ = + 2°C | COPd | 4.97 | - |
| $T_j$ = +7°C | Pdh | 3.1 | kW | $T_j$= +7°C | COPd | 6.78 | - |
| $T_j$ = + 12°C | Pdh | 2.0 | kW | $T_j$ = + 12°C | COPd | 9.10 | - |
| $T_j$= zweiwertige Temperatur | Pdh | 8.0 | kW | $T_j$ = zweiwertige Temperatur | COPd | 2.99 | - |
| $T_j$= Betriebsgrenztemperatur | Pdh | 7.3 | kW | $T_j$ = Betriebsgrenztemperatur | COPd | 2.72 | - |
| Für Luft/Wasser-Wärmepumpen: $T_j$ = – 15 °C (wenn TOL < – 20 °C) | Pdh | N/A | kW | Für Luft/Wasser-Wärmepumpen: Tj = – 15 °C (wenn TOL < – 20 °C) | COPd | N/A | - |
| Zweiwertige Temperatur | $T_{biv}$ | -7 | °C | Für Luft/Wasser-Wärmepumpen: Betriebsgrenztemperatur | TOL | -10 | °C |
| Zyklusintervallkapazität für Heizung | $P_{cych}$ | N/A | kW | Zyklus-Intervall-Effizienz | $COP_{cyc}$ | N/A | - |
| Abbaukoeffizient (**) | $C_{dh}$ | 0.9 | kW | Betriebsgrenztemperatur Heizwasser | WTOL | 65 | °C |
| Stromverbrauch in anderen Modi als dem aktiven Modus | | | | Zusatzheizung | | | |
| Aus-Modus | $P_{OFF}$ | 0.014 | kW | | | | |
| Thermostat-Aus-Modus | $P_{TO}$ | 0.024 | kW | Nennwärmeleistung (**) | $P_{sup}$ | 1.7 | kW |
| Standby Modus | $P_{SB}$ | 0.014 | kW | | | | |
| Kurbelgehäuseheizungsmodus | $P_{CK}$ | 0.000 | kW | Art der Energiezufuhr | Elektrisch | | |

| | | | | | | | |
|---|---|---|---|---|---|---|---|
| **Andere Dinge** | | | | | | | |
| Kapazitätskontrolle | Variable | | | Bei Luft/Wasser-Wärmepumpen: Nennluftvolumenstrom, außen | - | 4500 | $m^3/h$ |
| Schallleistungspegel, innen/außen | $L_{WA}$ | -/61 | dB | Für Wasser- oder Sole/Wasser-Wärmepumpen: Sole- oder Wasser- Nennvolumenstrom Außenwärmetauscher | - | N/A | $m^3/h$ |
| Jährlicher Energieverbrauch | $Q_{HE}$ | 3702 | kWh | | | | |
| Für Kombiheizgeräte mit Wärmepumpe: | | | | | | | |
| **Deklariertes Lastprofil** | N/A | | | **Energieeffizienz der Warmwasserbereitung** | $\eta_{wh}$ | N/A | % |
| Täglicher Stromverbrauch | $Q_{elec}$ | N/A | kWh | Täglicher Kraftstoffverbrauch | $Q_{fuel}$ | N/A | kWh |
| Jährlicher Stromverbrauch | AEC | N/A | kWh | Jährlicher Kraftstoffverbrauch | AFC | N/A | GJ |
| Kontaktdetails | Siehe Rückseite des Handbuchs | | | | | | |

(*) Bei Raumheizgeräten mit Wärmepumpe und Kombiheizgeräten mit Wärmepumpe ist die Nennwärmeleistung Prated gleich der Auslegungslast zum Heizen Pdesignh, und die Nennwärmeleistung eines Zusatzheizgeräts Psup ist gleich der Zusatzleistung zum Heizen sup(Tj ). (**) Wenn Cdh nicht durch Messung bestimmt wird, ist der Standard-Degradationskoeffizient Cdh = 0,9.

# Technisch Parameter

| | |
|---|---|
| Modell(s): | 10kW (Heizung 3kW) ;10kW |
| Luft-Wasser-Wärmepumpe | Ja |
| Wasser-Wasser-Wärmepumpe | nien |
| Sole/Wasser Wärmepumpe | nein |
| Niedertemperatur-Wärmepumpe | nein |
| Ausgestattet mit einer Zusatzheizung | Ja(für 10kW(Heizung 3kW))nein(für 10kW) |
| Kombiheizgerät mit Wärmepumpe | nein |
| Deklarierter Klimazustand; | Wärmer |
| Parameter sind für Anwendungen bei niedrigen Temperaturen deklariert. | |

| Artikel | Symbol | Wert | Einheit | Artikel | Symbol | Wert | Einheit |
|---|---|---|---|---|---|---|---|
| **Nennwärmeleistung (*)** | Bewertet | 9 | kW | **Saisonale Raumheizungs-Energieeffizienz** | $\eta_s$ | 268 | % |
| Angegebene Heizleistung bei Teillast bei Innentemperatur 20 °C und Außentemperatur $T_j$ | | | | Angegebene Heizleistung für Teillast bei Innentemperatur 20 °C und Außentemperatur $T_j$ | | | |
| $T_j$ = – 7°C | Bewertet | N/A | kW | $T_j$= – 7°C | COPd | N/A | - |
| $T_j$ = + 2°C | Pdh | 8.4 | kW | $T_j$ = + 2°C | COPd | 3.67 | - |
| $T_j$ = +7°C | Pdh | 5.5 | kW | $T_j$= +7°C | COPd | 5.99 | - |
| $T_j$ = + 12°C | Pdh | 2.4 | kW | $T_j$ = + 12°C | COPd | 8.73 | - |
| $T_j$= zweiwertige Temperatur | Pdh | 5.5 | kW | $T_j$ = zweiwertige Temperatur | COPd | 5.99 | - |
| $T_j$= Betriebsgrenztemperatur | Pdh | 8.4 | kW | $T_j$ = Betriebsgrenztemperatur | COPd | 3.67 | - |
| Für Luft/Wasser-Wärmepumpen: $T_j$ = – 15 °C (wenn TOL < – 20 °C) | Pdh | N/A | kW | Für Luft/Wasser-Wärmepumpen: Tj = – 15 °C (wenn TOL < – 20 °C) | COPd | N/A | - |
| Zweiwertige Temperatur | $T_{biv}$ | 7 | °C | Für Luft/Wasser-Wärmepumpen: Betriebsgrenztemperatur | TOL | 2 | °C |
| Zyklusintervallkapazität für Heizung | $P_{cych}$ | N/A | kW | Zyklus-Intervall-Effizienz | $COP_{cyc}$ | N/A | - |
| Abbaukoeffizient (**) | $C_{dh}$ | 0.9 | kW | Betriebsgrenztemperatur Heizwasser | WTOL | 65 | °C |
| Stromverbrauch in anderen Modi als dem aktiven Modus | | | | Zusatzheizung | | | |
| Aus-Modus | $P_{OFF}$ | 0.014 | kW | | | | |
| Thermostat-Aus-Modus | $P_{TO}$ | 0.024 | kW | Nennwärmeleistung (**) | $P_{sup}$ | 0.6 | kW |
| Standby Modus | $P_{SB}$ | 0.014 | kW | | | | |
| Kurbelgehäuseheizungsmodus | $P_{CK}$ | 0.000 | kW | Art der Energiezufuhr | Elektrisch | | |

| | | | | | | | |
|---|---|---|---|---|---|---|---|
| **Andere Dinge** | | | | | | | |
| Kapazitätskontrolle | Variable | | | Bei Luft/Wasser-Wärmepumpen: Nennluftvolumenstrom, außen | - | 4500 | $m^3/h$ |
| Schallleistungspegel, innen/außen | $L_{WA}$ | -/61 | dB | Für Wasser- oder Sole/Wasser-Wärmepumpen: Sole- oder Wasser- Nennvolumenstrom Außenwärmetauscher | - | N/A | $m^3/h$ |
| Jährlicher Energieverbrauch | $Q_{HE}$ | 1694 | kWh | | | | |
| Für Kombiheizgeräte mit Wärmepumpe: | | | | | | | |
| **Deklariertes Lastprofil** | N/A | | | **Energieeffizienz der Warmwasserbereitung** | $\eta_{wh}$ | N/A | % |
| Täglicher Stromverbrauch | $Q_{elec}$ | N/A | kWh | Täglicher Kraftstoffverbrauch | $Q_{fuel}$ | N/A | kWh |
| Jährlicher Stromverbrauch | AEC | N/A | kWh | Jährlicher Kraftstoffverbrauch | AFC | N/A | GJ |
| Kontaktdetails | Siehe Rückseite des Handbuchs | | | | | | |

(*) Bei Raumheizgeräten mit Wärmepumpe und Kombiheizgeräten mit Wärmepumpe ist die Nennwärmeleistung Prated gleich der Auslegungslast zum Heizen Pdesignh, und die Nennwärmeleistung eines Zusatzheizgeräts Psup ist gleich der Zusatzleistung zum Heizen sup(Tj ). (**) Wenn Cdh nicht durch Messung bestimmt wird, ist der Standard-Degradationskoeffizient Cdh = 0,9.

# Technisch Parameter

| | |
|---|---|
| Modell(s): | 10kW (Heizung 3kW) ;10kW |
| Luft-Wasser-Wärmepumpe | Ja |
| Wasser-Wasser-Wärmepumpe | nien |
| Sole/Wasser Wärmepumpe | nein |
| Niedertemperatur-Wärmepumpe | nein |
| Ausgestattet mit einer Zusatzheizung | Ja(für 10kW(Heizung 3kW))nein(für 10kW) |
| Kombiheizgerät mit Wärmepumpe | nein |
| Deklarierter Klimazustand; | Wärmer |
| Parameter sind für Anwendungen bei niedrigen Temperaturen deklariert. | |

| Artikel | Symbol | Wert | Einheit | Artikel | Symbol | Wert | Einheit |
|---|---|---|---|---|---|---|---|
| **Nennwärmeleistung (*)** | Bewertet | 8 | kW | **Saisonale Raumheizungs-Energieeffizienz** | $\eta_s$ | 170 | % |
| Angegebene Heizleistung bei Teillast bei Innentemperatur 20 °C und Außentemperatur $T_j$ | | | | Angegebene Heizleistung für Teillast bei Innentemperatur 20 °C und Außentemperatur $T_j$ | | | |
| $T_j$ = – 7°C | Bewertet | 4.7 | kW | $T_j$= – 7°C | COPd | 3.50 | - |
| $T_j$ = + 2°C | Pdh | 3.0 | kW | $T_j$ = + 2°C | COPd | 5.51 | - |
| $T_j$ = +7°C | Pdh | 2.0 | kW | $T_j$= +7°C | COPd | 6.63 | - |
| $T_j$ = + 12°C | Pdh | 1.9 | kW | $T_j$ = + 12°C | COPd | 8.58 | - |
| $T_j$= zweiwertige Temperatur | Pdh | 6.3 | kW | $T_j$ = zweiwertige Temperatur | COPd | 2.56 | - |
| $T_j$= Betriebsgrenztemperatur | Pdh | 4.6 | kW | $T_j$ = Betriebsgrenztemperatur | COPd | 1.99 | - |
| Für Luft/Wasser-Wärmepumpen: $T_j$ = – 15 °C (wenn TOL < – 20 °C) | Pdh | N/A | kW | Für Luft/Wasser-Wärmepumpen: Tj = – 15 °C (wenn TOL < – 20 °C) | COPd | N/A | - |
| Zweiwertige Temperatur | $T_{biv}$ | -15 | °C | Für Luft/Wasser-Wärmepumpen: Betriebsgrenztemperatur | TOL | -22 | °C |
| Zyklusintervallkapazität für Heizung | $P_{cych}$ | N/A | kW | Zyklus-Intervall-Effizienz | $COP_{cyc}$ | N/A | - |
| Abbaukoeffizient (**) | $C_{dh}$ | 0.9 | kW | Betriebsgrenztemperatur Heizwasser | WTOL | 65 | °C |
| Stromverbrauch in anderen Modi als dem aktiven Modus | | | | Zusatzheizung | | | |
| Aus-Modus | $P_{OFF}$ | 0.014 | kW | | | | |
| Thermostat-Aus-Modus | $P_{TO}$ | 0.024 | kW | Nennwärmeleistung (**) | $P_{sup}$ | 3.4 | kW |
| Standby Modus | $P_{SB}$ | 0.014 | kW | | | | |
| Kurbelgehäuseheizungsmodus | $P_{CK}$ | 0.000 | kW | Art der Energiezufuhr | Elektrisch | | |

| | | | | | | | |
|---|---|---|---|---|---|---|---|
| **Andere Dinge** | | | | | | | |
| Kapazitätskontrolle | Variable | | | Bei Luft/Wasser-Wärmepumpen: Nennluftvolumenstrom, außen | - | 4500 | $m^3/h$ |
| Schallleistungspegel, innen/außen | $L_{WA}$ | -/61 | dB | Für Wasser- oder Sole/Wasser-Wärmepumpen: Sole- oder Wasser- Nennvolumenstrom Außenwärmetauscher | - | N/A | $m^3/h$ |
| Jährlicher Energieverbrauch | $Q_{HE}$ | 4417 | kWh | | | | |
| Für Kombiheizgeräte mit Wärmepumpe: | | | | | | | |
| **Deklariertes Lastprofil** | N/A | | | **Energieeffizienz der Warmwasserbereitung** | $\eta_{wh}$ | N/A | % |
| Täglicher Stromverbrauch | $Q_{elec}$ | N/A | kWh | Täglicher Kraftstoffverbrauch | $Q_{fuel}$ | N/A | kWh |
| Jährlicher Stromverbrauch | AEC | N/A | kWh | Jährlicher Kraftstoffverbrauch | AFC | N/A | GJ |
| Kontaktdetails | Siehe Rückseite des Handbuchs | | | | | | |

(*) Bei Raumheizgeräten mit Wärmepumpe und Kombiheizgeräten mit Wärmepumpe ist die Nennwärmeleistung Prated gleich der Auslegungslast zum Heizen Pdesignh, und die Nennwärmeleistung eines Zusatzheizgeräts Psup ist gleich der Zusatzleistung zum Heizen sup(Tj ). (**) Wenn Cdh nicht durch Messung bestimmt wird, ist der Standard-Degradationskoeffizient Cdh = 0,9.

# Technisch Parameter

| | |
|---|---|
| Modell(s): | 10kW (Heizung 3kW) ;10kW |
| Luft-Wasser-Wärmepumpe | Ja |
| Wasser-Wasser-Wärmepumpe | nien |
| Sole/Wasser Wärmepumpe | nein |
| Niedertemperatur-Wärmepumpe | nein |
| Ausgestattet mit einer Zusatzheizung | Ja(für 10kW(Heizung 3kW))nein(für 10kW) |
| Kombiheizgerät mit Wärmepumpe | nein |
| Deklarierter Klimazustand; | Durchschnitt |
| Parameter werden für die Anwendung bei mittlerer Temperatur deklariert. | |

| Artikel | Symbol | Wert | Einheit | Artikel | Symbol | Wert | Einheit |
|---|---|---|---|---|---|---|---|
| **Nennwärmeleistung (*)** | Bewertet | 8 | kW | **Saisonale Raumheizungs-Energieeffizienz** | $\eta_s$ | 138 | % |
| Angegebene Heizleistung bei Teillast bei Innentemperatur 20 °C und Außentemperatur $T_j$ | | | | Angegebene Heizleistung für Teillast bei Innentemperatur 20 °C und Außentemperatur $T_j$ | | | |
| $T_j$ = – 7°C | Bewertet | 6.8 | kW | $T_j$= – 7°C | COPd | 2.10 | - |
| $T_j$ = + 2°C | Pdh | 4.2 | kW | $T_j$ = + 2°C | COPd | 3.44 | - |
| $T_j$ = +7°C | Pdh | 2.6 | kW | $T_j$= +7°C | COPd | 4.74 | - |
| $T_j$ = + 12°C | Pdh | 1.8 | kW | $T_j$ = + 12°C | COPd | 6.22 | - |
| $T_j$= zweiwertige Temperatur | Pdh | 6.8 | kW | $T_j$ = zweiwertige Temperatur | COPd | 2.10 | - |
| $T_j$= Betriebsgrenztemperatur | Pdh | 5.2 | kW | $T_j$ = Betriebsgrenztemperatur | COPd | 1.83 | - |
| Für Luft/Wasser-Wärmepumpen: $T_j$ = – 15 °C (wenn TOL < – 20 °C) | Pdh | N/A | kW | Für Luft/Wasser-Wärmepumpen: Tj = – 15 °C (wenn TOL < – 20 °C) | COPd | N/A | - |
| Zweiwertige Temperatur | $T_{biv}$ | -7 | °C | Für Luft/Wasser-Wärmepumpen: Betriebsgrenztemperatur | TOL | -10 | °C |
| Zyklusintervallkapazität für Heizung | $P_{cych}$ | N/A | kW | Zyklus-Intervall-Effizienz | $COP_{cyc}$ | N/A | - |
| Abbaukoeffizient (**) | $C_{dh}$ | 0.9 | kW | Betriebsgrenztemperatur Heizwasser | WTOL | 65 | °C |
| Stromverbrauch in anderen Modi als dem aktiven Modus | | | | Zusatzheizung | | | |
| Aus-Modus | $P_{OFF}$ | 0.014 | kW | | | | |
| Thermostat-Aus-Modus | $P_{TO}$ | 0.024 | kW | Nennwärmeleistung (**) | $P_{sup}$ | 2.8 | kW |
| Standby Modus | $P_{SB}$ | 0.014 | kW | | | | |
| Kurbelgehäuseheizungsmodus | $P_{CK}$ | 0.000 | kW | Art der Energiezufuhr | Elektrisch | | |

| | | | | | | | |
|---|---|---|---|---|---|---|---|
| **Andere Dinge** | | | | | | | |
| Kapazitätskontrolle | Variable | | | Bei Luft/Wasser-Wärmepumpen: Nennluftvolumenstrom, außen | - | 4500 | $m^3/h$ |
| Schallleistungspegel, innen/außen | $L_{WA}$ | -/61 | dB | Für Wasser- oder Sole/Wasser-Wärmepumpen: Sole- oder Wasser- Nennvolumenstrom Außenwärmetauscher | - | N/A | $m^3/h$ |
| Jährlicher Energieverbrauch | $Q_{HE}$ | 4537 | kWh | | | | |
| Für Kombiheizgeräte mit Wärmepumpe: | | | | | | | |
| **Deklariertes Lastprofil** | N/A | | | **Energieeffizienz der Warmwasserbereitung** | $\eta_{wh}$ | N/A | % |
| Täglicher Stromverbrauch | $Q_{elec}$ | N/A | kWh | Täglicher Kraftstoffverbrauch | $Q_{fuel}$ | N/A | kWh |
| Jährlicher Stromverbrauch | AEC | N/A | kWh | Jährlicher Kraftstoffverbrauch | AFC | N/A | GJ |
| Kontaktdetails | Siehe Rückseite des Handbuchs | | | | | | |

(*) Bei Raumheizgeräten mit Wärmepumpe und Kombiheizgeräten mit Wärmepumpe ist die Nennwärmeleistung Prated gleich der Auslegungslast zum Heizen Pdesignh, und die Nennwärmeleistung eines Zusatzheizgeräts Psup ist gleich der Zusatzleistung zum Heizen sup(Tj ). (**) Wenn Cdh nicht durch Messung bestimmt wird, ist der Standard-Degradationskoeffizient Cdh = 0,9.

# Technisch Parameter

| | |
|---|---|
| Modell(s): | 10kW (Heizung 3kW) ;10kW |
| Luft-Wasser-Wärmepumpe | Ja |
| Wasser-Wasser-Wärmepumpe | nien |
| Sole/Wasser Wärmepumpe | nein |
| Niedertemperatur-Wärmepumpe | nein |
| Ausgestattet mit einer Zusatzheizung | Ja(für 10kW(Heizung 3kW))nein(für 10kW) |
| Kombiheizgerät mit Wärmepumpe | nein |
| Deklarierter Klimazustand; | Wärmer |
| Parameter werden für die Anwendung bei mittlerer Temperatur deklariert. | |

| Artikel | Symbol | Wert | Einheit | Artikel | Symbol | Wert | Einheit |
|---|---|---|---|---|---|---|---|
| **Nennwärmeleistung (*)** | Bewertet | 8 | kW | **Saisonale Raumheizungs-Energieeffizienz** | $\eta_s$ | 179 | % |
| Angegebene Heizleistung bei Teillast bei Innentemperatur 20 °C und Außentemperatur $T_j$ | | | | Angegebene Heizleistung für Teillast bei Innentemperatur 20 °C und Außentemperatur $T_j$ | | | |
| $T_j$ = – 7°C | Bewertet | N/A | kW | $T_j$= – 7°C | COPd | N/A | - |
| $T_j$ = + 2°C | Pdh | 7.6 | kW | $T_j$ = + 2°C | COPd | 2.27 | - |
| $T_j$ = +7°C | Pdh | 5.2 | kW | $T_j$= +7°C | COPd | 3.92 | - |
| $T_j$ = + 12°C | Pdh | 2.5 | kW | $T_j$ = + 12°C | COPd | 6.17 | - |
| $T_j$= zweiwertige Temperatur | Pdh | 5.2 | kW | $T_j$ = zweiwertige Temperatur | COPd | 3.92 | - |
| $T_j$= Betriebsgrenztemperatur | Pdh | 7.6 | kW | $T_j$ = Betriebsgrenztemperatur | COPd | 2.27 | - |
| Für Luft/Wasser-Wärmepumpen: $T_j$ = – 15 °C (wenn TOL < – 20 °C) | Pdh | N/A | kW | Für Luft/Wasser-Wärmepumpen: Tj = – 15 °C (wenn TOL < – 20 °C) | COPd | N/A | - |
| Zweiwertige Temperatur | $T_{biv}$ | 7 | °C | Für Luft/Wasser-Wärmepumpen: Betriebsgrenztemperatur | TOL | 2 | °C |
| Zyklusintervallkapazität für Heizung | $P_{cych}$ | N/A | kW | Zyklus-Intervall-Effizienz | $COP_{cyc}$ | N/A | - |
| Abbaukoeffizient (**) | $C_{dh}$ | 0.9 | kW | Betriebsgrenztemperatur Heizwasser | WTOL | 65 | °C |
| Stromverbrauch in anderen Modi als dem aktiven Modus | | | | Zusatzheizung | | | |
| Aus-Modus | $P_{OFF}$ | 0.014 | kW | | | | |
| Thermostat-Aus-Modus | $P_{TO}$ | 0.024 | kW | Nennwärmeleistung (**) | $P_{sup}$ | 0.4 | kW |
| Standby Modus | $P_{SB}$ | 0.014 | kW | | | | |
| Kurbelgehäuseheizungsmodus | $P_{CK}$ | 0.000 | kW | Art der Energiezufuhr | Elektrisch | | |

| | | | | | | | |
|---|---|---|---|---|---|---|---|
| **Andere Dinge** | | | | | | | |
| Kapazitätskontrolle | Variable | | | Bei Luft/Wasser-Wärmepumpen: Nennluftvolumenstrom, außen | - | 4500 | $m^3/h$ |
| Schallleistungspegel, innen/außen | $L_{WA}$ | -/61 | dB | Für Wasser- oder Sole/Wasser-Wärmepumpen: Sole- oder Wasser- Nennvolumenstrom Außenwärmetauscher | - | N/A | $m^3/h$ |
| Jährlicher Energieverbrauch | $Q_{HE}$ | 2353 | kWh | | | | |
| Für Kombiheizgeräte mit Wärmepumpe: | | | | | | | |
| **Deklariertes Lastprofil** | N/A | | | **Energieeffizienz der Warmwasserbereitung** | $\eta_{wh}$ | N/A | % |
| Täglicher Stromverbrauch | $Q_{elec}$ | N/A | kWh | Täglicher Kraftstoffverbrauch | $Q_{fuel}$ | N/A | kWh |
| Jährlicher Stromverbrauch | AEC | N/A | kWh | Jährlicher Kraftstoffverbrauch | AFC | N/A | GJ |
| Kontaktdetails | Siehe Rückseite des Handbuchs | | | | | | |

(*) Bei Raumheizgeräten mit Wärmepumpe und Kombiheizgeräten mit Wärmepumpe ist die Nennwärmeleistung Prated gleich der Auslegungslast zum Heizen Pdesignh, und die Nennwärmeleistung eines Zusatzheizgeräts Psup ist gleich der Zusatzleistung zum Heizen sup(Tj ). (**) Wenn Cdh nicht durch Messung bestimmt wird, ist der Standard-Degradationskoeffizient Cdh = 0,9.

# Technisch Parameter

| | |
|---|---|
| Modell(s): | 10kW (Heizung 3kW) ;10kW |
| Luft-Wasser-Wärmepumpe | Ja |
| Wasser-Wasser-Wärmepumpe | nien |
| Sole/Wasser Wärmepumpe | nein |
| Niedertemperatur-Wärmepumpe | nein |
| Ausgestattet mit einer Zusatzheizung | Ja(für 10kW(Heizung 3kW))nein(für 10kW) |
| Kombiheizgerät mit Wärmepumpe | nein |
| Deklarierter Klimazustand; | Kälter |
| PParameter werden für die Anwendung bei mittlerer Temperatur deklariert. | |

| Artikel | Symbol | Wert | Einheit | Artikel | Symbol | Wert | Einheit |
|---|---|---|---|---|---|---|---|
| **Nennwärmeleistung (*)** | Bewertet | 7 | kW | **Saisonale Raumheizungs-Energieeffizienz** | $\eta_s$ | 116 | % |
| Angegebene Heizleistung bei Teillast bei Innentemperatur 20 °C und Außentemperatur $T_j$ | | | | Angegebene Heizleistung für Teillast bei Innentemperatur 20 °C und Außentemperatur $T_j$ | | | |
| $T_j$ = – 7°C | Bewertet | 4.1 | kW | $T_j$= – 7°C | COPd | 2.53 | - |
| $T_j$ = + 2°C | Pdh | 2.6 | kW | $T_j$ = + 2°C | COPd | 3.51 | - |
| $T_j$ = +7°C | Pdh | 1.7 | kW | $T_j$= +7°C | COPd | 4.52 | - |
| $T_j$ = + 12°C | Pdh | 1.7 | kW | $T_j$ = + 12°C | COPd | 6.51 | - |
| $T_j$= zweiwertige Temperatur | Pdh | 5.5 | kW | $T_j$ = zweiwertige Temperatur | COPd | 1.92 | - |
| $T_j$= Betriebsgrenztemperatur | Pdh | 2.8 | kW | $T_j$ = Betriebsgrenztemperatur | COPd | 1.24 | - |
| Für Luft/Wasser-Wärmepumpen: $T_j$ = – 15 °C (wenn TOL < – 20 °C) | Pdh | N/A | kW | Für Luft/Wasser-Wärmepumpen: Tj = – 15 °C (wenn TOL < – 20 °C) | COPd | N/A | - |
| Zweiwertige Temperatur | $T_{biv}$ | -15 | °C | Für Luft/Wasser-Wärmepumpen: Betriebsgrenztemperatur | TOL | -22 | °C |
| Zyklusintervallkapazität für Heizung | $P_{cych}$ | N/A | kW | Zyklus-Intervall-Effizienz | $COP_{cyc}$ | N/A | - |
| Abbaukoeffizient (**) | $C_{dh}$ | 0.9 | kW | Betriebsgrenztemperatur Heizwasser | WTOL | 65 | °C |
| Stromverbrauch in anderen Modi als dem aktiven Modus | | | | Zusatzheizung | | | |
| Aus-Modus | $P_{OFF}$ | 0.014 | kW | | | | |
| Thermostat-Aus-Modus | $P_{TO}$ | 0.024 | kW | Nennwärmeleistung (**) | $P_{sup}$ | 4.2 | kW |
| Standby Modus | $P_{SB}$ | 0.014 | kW | | | | |
| Kurbelgehäuseheizungsmodus | $P_{CK}$ | 0.000 | kW | Art der Energiezufuhr | Elektrisch | | |

| | | | | | | | |
|---|---|---|---|---|---|---|---|
| **Andere Dinge** | | | | | | | |
| Kapazitätskontrolle | Variable | | | Bei Luft/Wasser-Wärmepumpen: Nennluftvolumenstrom, außen | - | 4500 | $m^3/h$ |
| Schallleistungspegel, innen/außen | $L_{WA}$ | -/61 | dB | Für Wasser- oder Sole/Wasser-Wärmepumpen: Sole- oder Wasser- Nennvolumenstrom Außenwärmetauscher | - | N/A | $m^3/h$ |
| Jährlicher Energieverbrauch | $Q_{HE}$ | 5613 | kWh | | | | |
| Für Kombiheizgeräte mit Wärmepumpe: | | | | | | | |
| **Deklariertes Lastprofil** | N/A | | | **Energieeffizienz der Warmwasserbereitung** | $\eta_{wh}$ | N/A | % |
| Täglicher Stromverbrauch | $Q_{elec}$ | N/A | kWh | Täglicher Kraftstoffverbrauch | $Q_{fuel}$ | N/A | kWh |
| Jährlicher Stromverbrauch | AEC | N/A | kWh | Jährlicher Kraftstoffverbrauch | AFC | N/A | GJ |
| Kontaktdetails | Siehe Rückseite des Handbuchs | | | | | | |

(*) Bei Raumheizgeräten mit Wärmepumpe und Kombiheizgeräten mit Wärmepumpe ist die Nennwärmeleistung Prated gleich der Auslegungslast zum Heizen Pdesignh, und die Nennwärmeleistung eines Zusatzheizgeräts Psup ist gleich der Zusatzleistung zum Heizen sup(Tj ). (**) Wenn Cdh nicht durch Messung bestimmt wird, ist der Standard-Degradationskoeffizient Cdh = 0,9.

# Technisch Parameter

| | |
|---|---|
| Modell(s): | 12kW (Heizung 3kW) ;12kW |
| Luft-Wasser-Wärmepumpe | Ja |
| Wasser-Wasser-Wärmepumpe | nien |
| Sole/Wasser Wärmepumpe | nein |
| Niedertemperatur-Wärmepumpe | nein |
| Ausgestattet mit einer Zusatzheizung | Ja(für 12kW(Heizung 3kW))nein(für 12kW) |
| Kombiheizgerät mit Wärmepumpe | nein |
| Deklarierter Klimazustand; | Durchschnitt |
| Parameter sind für Anwendungen bei niedrigen Temperaturen deklariert. | |

| Artikel | Symbol | Wert | Einheit | Artikel | Symbol | Wert | Einheit |
|---|---|---|---|---|---|---|---|
| **Nennwärmeleistung (*)** | Bewertet | 12 | kW | **Saisonale Raumheizungs-Energieeffizienz** | $\eta_s$ | 188 | % |
| Angegebene Heizleistung bei Teillast bei Innentemperatur 20 °C und Außentemperatur $T_j$ | | | | Angegebene Heizleistung für Teillast bei Innentemperatur 20 °C und Außentemperatur $T_j$ | | | |
| $T_j$ = – 7°C | Bewertet | 10.7 | kW | $T_j$= – 7°C | COPd | 2.90 | - |
| $T_j$ = + 2°C | Pdh | 7.0 | kW | $T_j$ = + 2°C | COPd | 4.53 | - |
| $T_j$ = +7°C | Pdh | 4.6 | kW | $T_j$= +7°C | COPd | 6.66 | - |
| $T_j$ = + 12°C | Pdh | 4.2 | kW | $T_j$ = + 12°C | COPd | 8.92 | - |
| $T_j$= zweiwertige Temperatur | Pdh | 10.7 | kW | $T_j$ = zweiwertige Temperatur | COPd | 2.90 | - |
| $T_j$= Betriebsgrenztemperatur | Pdh | 11.4 | kW | $T_j$ = Betriebsgrenztemperatur | COPd | 2.63 | - |
| Für Luft/Wasser-Wärmepumpen: $T_j$ = – 15 °C (wenn TOL < – 20 °C) | Pdh | N/A | kW | Für Luft/Wasser-Wärmepumpen: Tj = – 15 °C (wenn TOL < – 20 °C) | COPd | N/A | - |
| Zweiwertige Temperatur | $T_{biv}$ | -7 | °C | Für Luft/Wasser-Wärmepumpen: Betriebsgrenztemperatur | TOL | -10 | °C |
| Zyklusintervallkapazität für Heizung | $P_{cych}$ | N/A | kW | Zyklus-Intervall-Effizienz | $COP_{cyc}$ | N/A | - |
| Abbaukoeffizient (**) | $C_{dh}$ | 0.9 | kW | Betriebsgrenztemperatur Heizwasser | WTOL | 65 | °C |
| Stromverbrauch in anderen Modi als dem aktiven Modus | | | | Zusatzheizung | | | |
| Aus-Modus | $P_{OFF}$ | 0.014 | kW | | | | |
| Thermostat-Aus-Modus | $P_{TO}$ | 0.024 | kW | Nennwärmeleistung (**) | $P_{sup}$ | 0.6 | kW |
| Standby Modus | $P_{SB}$ | 0.014 | kW | | | | |
| Kurbelgehäuseheizungsmodus | $P_{CK}$ | 0.000 | kW | Art der Energiezufuhr | Elektrisch | | |

| | | | | | | | |
|---|---|---|---|---|---|---|---|
| **Andere Dinge** | | | | | | | |
| Kapazitätskontrolle | Variable | | | Bei Luft/Wasser-Wärmepumpen: Nennluftvolumenstrom, außen | - | 5000 | $m^3/h$ |
| Schallleistungspegel, innen/außen | $L_{WA}$ | -/64 | dB | Für Wasser- oder Sole/Wasser-Wärmepumpen: Sole- oder Wasser- Nennvolumenstrom Außenwärmetauscher | - | N/A | $m^3/h$ |
| Jährlicher Energieverbrauch | $Q_{HE}$ | 5261 | kWh | | | | |
| Für Kombiheizgeräte mit Wärmepumpe: | | | | | | | |
| **Deklariertes Lastprofil** | N/A | | | **Energieeffizienz der Warmwasserbereitung** | $\eta_{wh}$ | N/A | % |
| Täglicher Stromverbrauch | $Q_{elec}$ | N/A | kWh | Täglicher Kraftstoffverbrauch | $Q_{fuel}$ | N/A | kWh |
| Jährlicher Stromverbrauch | AEC | N/A | kWh | Jährlicher Kraftstoffverbrauch | AFC | N/A | GJ |
| Kontaktdetails | Siehe Rückseite des Handbuchs | | | | | | |

(*) Bei Raumheizgeräten mit Wärmepumpe und Kombiheizgeräten mit Wärmepumpe ist die Nennwärmeleistung Prated gleich der Auslegungslast zum Heizen Pdesignh, und die Nennwärmeleistung eines Zusatzheizgeräts Psup ist gleich der Zusatzleistung zum Heizen sup(Tj ). (**) Wenn Cdh nicht durch Messung bestimmt wird, ist der Standard-Degradationskoeffizient Cdh = 0,9.

# Technisch Parameter

| | |
|---|---|
| Modell(s): | 12kW (Heizung 3kW) ;12kW |
| Luft-Wasser-Wärmepumpe | Ja |
| Wasser-Wasser-Wärmepumpe | nien |
| Sole/Wasser Wärmepumpe | nein |
| Niedertemperatur-Wärmepumpe | nein |
| Ausgestattet mit einer Zusatzheizung | Ja(für 12kW(Heizung 3kW))nein(für 12kW) |
| Kombiheizgerät mit Wärmepumpe | nein |
| Deklarierter Klimazustand; | Wärmer |
| Parameter sind für Anwendungen bei niedrigen Temperaturen deklariert. | |

| Artikel | Symbol | Wert | Einheit | Artikel | Symbol | Wert | Einheit |
|---|---|---|---|---|---|---|---|
| **Nennwärmeleistung (*)** | Bewertet | 11 | kW | **Saisonale Raumheizungs-Energieeffizienz** | $\eta_s$ | 253 | % |
| Angegebene Heizleistung bei Teillast bei Innentemperatur 20 °C und Außentemperatur $T_j$ | | | | Angegebene Heizleistung für Teillast bei Innentemperatur 20 °C und Außentemperatur $T_j$ | | | |
| $T_j$ = – 7°C | Bewertet | N/A | kW | $T_j$= – 7°C | COPd | N/A | - |
| $T_j$ = + 2°C | Pdh | 11.1 | kW | $T_j$ = + 2°C | COPd | 3.62 | - |
| $T_j$ = +7°C | Pdh | 7.1 | kW | $T_j$= +7°C | COPd | 5.64 | - |
| $T_j$ = + 12°C | Pdh | 4.7 | kW | $T_j$ = + 12°C | COPd | 8.33 | - |
| $T_j$= zweiwertige Temperatur | Pdh | 7.1 | kW | $T_j$ = zweiwertige Temperatur | COPd | 5.64 | - |
| $T_j$= Betriebsgrenztemperatur | Pdh | 11.1 | kW | $T_j$ = Betriebsgrenztemperatur | COPd | 3.62 | - |
| Für Luft/Wasser-Wärmepumpen: $T_j$ = – 15 °C (wenn TOL < – 20 °C) | Pdh | N/A | kW | Für Luft/Wasser-Wärmepumpen: Tj = – 15 °C (wenn TOL < – 20 °C) | COPd | N/A | - |
| Zweiwertige Temperatur | $T_{biv}$ | 7 | °C | Für Luft/Wasser-Wärmepumpen: Betriebsgrenztemperatur | TOL | 2 | °C |
| Zyklusintervallkapazität für Heizung | $P_{cych}$ | N/A | kW | Zyklus-Intervall-Effizienz | $COP_{cyc}$ | N/A | - |
| Abbaukoeffizient (**) | $C_{dh}$ | 0.9 | kW | Betriebsgrenztemperatur Heizwasser | WTOL | 65 | °C |
| Stromverbrauch in anderen Modi als dem aktiven Modus | | | | Zusatzheizung | | | |
| Aus-Modus | $P_{OFF}$ | 0.014 | kW | | | | |
| Thermostat-Aus-Modus | $P_{TO}$ | 0.024 | kW | Nennwärmeleistung (**) | $P_{sup}$ | 0.0 | kW |
| Standby Modus | $P_{SB}$ | 0.014 | kW | | | | |
| Kurbelgehäuseheizungsmodus | $P_{CK}$ | 0.000 | kW | Art der Energiezufuhr | Elektrisch | | |

| | | | | | | | |
|---|---|---|---|---|---|---|---|
| **Andere Dinge** | | | | | | | |
| Kapazitätskontrolle | Variable | | | Bei Luft/Wasser-Wärmepumpen: Nennluftvolumenstrom, außen | - | 5000 | $m^3/h$ |
| Schallleistungspegel, innen/außen | $L_{WA}$ | -/64 | dB | Für Wasser- oder Sole/Wasser-Wärmepumpen: Sole- oder Wasser- Nennvolumenstrom Außenwärmetauscher | - | N/A | $m^3/h$ |
| Jährlicher Energieverbrauch | $Q_{HE}$ | 2326 | kWh | | | | |
| Für Kombiheizgeräte mit Wärmepumpe: | | | | | | | |
| **Deklariertes Lastprofil** | N/A | | | **Energieeffizienz der Warmwasserbereitung** | $\eta_{wh}$ | N/A | % |
| Täglicher Stromverbrauch | $Q_{elec}$ | N/A | kWh | Täglicher Kraftstoffverbrauch | $Q_{fuel}$ | N/A | kWh |
| Jährlicher Stromverbrauch | AEC | N/A | kWh | Jährlicher Kraftstoffverbrauch | AFC | N/A | GJ |
| Kontaktdetails | Siehe Rückseite des Handbuchs | | | | | | |

(*) Bei Raumheizgeräten mit Wärmepumpe und Kombiheizgeräten mit Wärmepumpe ist die Nennwärmeleistung Prated gleich der Auslegungslast zum Heizen Pdesignh, und die Nennwärmeleistung eines Zusatzheizgeräts Psup ist gleich der Zusatzleistung zum Heizen sup(Tj ). (**) Wenn Cdh nicht durch Messung bestimmt wird, ist der Standard-Degradationskoeffizient Cdh = 0,9.

# Technisch Parameter

| | |
|---|---|
| Modell(s): | 12kW (Heizung 3kW) ;12kW |
| Luft-Wasser-Wärmepumpe | Ja |
| Wasser-Wasser-Wärmepumpe | nien |
| Sole/Wasser Wärmepumpe | nein |
| Niedertemperatur-Wärmepumpe | nein |
| Ausgestattet mit einer Zusatzheizung | Ja(für 12kW(Heizung 3kW))nein(für 12kW) |
| Kombiheizgerät mit Wärmepumpe | nein |
| Deklarierter Klimazustand; | Kälter |
| Parameter sind für Anwendungen bei niedrigen Temperaturen deklariert. | |

| Artikel | Symbol | Wert | Einheit | Artikel | Symbol | Wert | Einheit |
|---|---|---|---|---|---|---|---|
| **Nennwärmeleistung (*)** | Bewertet | 11 | kW | **Saisonale Raumheizungs-Energieeffizienz** | $\eta_s$ | 163 | % |
| Angegebene Heizleistung bei Teillast bei Innentemperatur 20 °C und Außentemperatur $T_j$ | | | | Angegebene Heizleistung für Teillast bei Innentemperatur 20 °C und Außentemperatur $T_j$ | | | |
| $T_j$ = – 7°C | Bewertet | 7.2 | kW | $T_j$= – 7°C | COPd | 3.51 | - |
| $T_j$ = + 2°C | Pdh | 4.1 | kW | $T_j$ = + 2°C | COPd | 5.05 | - |
| $T_j$ = +7°C | Pdh | 3.2 | kW | $T_j$= +7°C | COPd | 6.17 | - |
| $T_j$ = + 12°C | Pdh | 3.6 | kW | $T_j$ = + 12°C | COPd | 8.19 | - |
| $T_j$= zweiwertige Temperatur | Pdh | 9.3 | kW | $T_j$ = zweiwertige Temperatur | COPd | 2.59 | - |
| $T_j$= Betriebsgrenztemperatur | Pdh | 7.1 | kW | $T_j$ = Betriebsgrenztemperatur | COPd | 2.08 | - |
| Für Luft/Wasser-Wärmepumpen: $T_j$ = – 15 °C (wenn TOL < – 20 °C) | Pdh | N/A | kW | Für Luft/Wasser-Wärmepumpen: Tj = – 15 °C (wenn TOL < – 20 °C) | COPd | N/A | - |
| Zweiwertige Temperatur | $T_{biv}$ | -15 | °C | Für Luft/Wasser-Wärmepumpen: Betriebsgrenztemperatur | TOL | -22 | °C |
| Zyklusintervallkapazität für Heizung | $P_{cych}$ | N/A | kW | Zyklus-Intervall-Effizienz | $COP_{cyc}$ | N/A | - |
| Abbaukoeffizient (**) | $C_{dh}$ | 0.9 | kW | Betriebsgrenztemperatur Heizwasser | WTOL | 65 | °C |
| Stromverbrauch in anderen Modi als dem aktiven Modus | | | | Zusatzheizung | | | |
| Aus-Modus | $P_{OFF}$ | 0.014 | kW | | | | |
| Thermostat-Aus-Modus | $P_{TO}$ | 0.024 | kW | Nennwärmeleistung (**) | $P_{sup}$ | 3.9 | kW |
| Standby Modus | $P_{SB}$ | 0.014 | kW | | | | |
| Kurbelgehäuseheizungsmodus | $P_{CK}$ | 0.000 | kW | Art der Energiezufuhr | Elektrisch | | |

| | | | | | | | |
|---|---|---|---|---|---|---|---|
| **Andere Dinge** | | | | | | | |
| Kapazitätskontrolle | Variable | | | Bei Luft/Wasser-Wärmepumpen: Nennluftvolumenstrom, außen | - | 5000 | $m^3/h$ |
| Schallleistungspegel, innen/außen | $L_{WA}$ | -/64 | dB | Für Wasser- oder Sole/Wasser-Wärmepumpen: Sole- oder Wasser- Nennvolumenstrom Außenwärmetauscher | - | N/A | $m^3/h$ |
| Jährlicher Energieverbrauch | $Q_{HE}$ | 6746 | kWh | | | | |
| Für Kombiheizgeräte mit Wärmepumpe: | | | | | | | |
| **Deklariertes Lastprofil** | N/A | | | **Energieeffizienz der Warmwasserbereitung** | $\eta_{wh}$ | N/A | % |
| Täglicher Stromverbrauch | $Q_{elec}$ | N/A | kWh | Täglicher Kraftstoffverbrauch | $Q_{fuel}$ | N/A | kWh |
| Jährlicher Stromverbrauch | AEC | N/A | kWh | Jährlicher Kraftstoffverbrauch | AFC | N/A | GJ |
| Kontaktdetails | Siehe Rückseite des Handbuchs | | | | | | |

(*) Bei Raumheizgeräten mit Wärmepumpe und Kombiheizgeräten mit Wärmepumpe ist die Nennwärmeleistung Prated gleich der Auslegungslast zum Heizen Pdesignh, und die Nennwärmeleistung eines Zusatzheizgeräts Psup ist gleich der Zusatzleistung zum Heizen sup(Tj ). (**) Wenn Cdh nicht durch Messung bestimmt wird, ist der Standard-Degradationskoeffizient Cdh = 0,9.

# Technisch Parameter

| | |
|---|---|
| Modell(s): | 12kW (Heizung 3kW) ;12kW |
| Luft-Wasser-Wärmepumpe | Ja |
| Wasser-Wasser-Wärmepumpe | nien |
| Sole/Wasser Wärmepumpe | nein |
| Niedertemperatur-Wärmepumpe | nein |
| Ausgestattet mit einer Zusatzheizung | Ja(für 12kW(Heizung 3kW))nein(für 12kW) |
| Kombiheizgerät mit Wärmepumpe | nein |
| Deklarierter Klimazustand; | Durchschnitt |
| Parameter werden für die Anwendung bei mittlerer Temperatur deklariert. | |

| Artikel | Symbol | Wert | Einheit | Artikel | Symbol | Wert | Einheit |
|---|---|---|---|---|---|---|---|
| **Nennwärmeleistung (*)** | Bewertet | 12 | kW | **Saisonale Raumheizungs-Energieeffizienz** | $\eta_s$ | 136 | % |
| Angegebene Heizleistung bei Teillast bei Innentemperatur 20 °C und Außentemperatur $T_j$ | | | | Angegebene Heizleistung für Teillast bei Innentemperatur 20 °C und Außentemperatur $T_j$ | | | |
| $T_j$ = – 7°C | Bewertet | 10.7 | kW | $T_j$= – 7°C | COPd | 2.12 | - |
| $T_j$ = + 2°C | Pdh | 6.6 | kW | $T_j$ = + 2°C | COPd | 3.29 | - |
| $T_j$ = +7°C | Pdh | 4.4 | kW | $T_j$= +7°C | COPd | 4.74 | - |
| $T_j$ = + 12°C | Pdh | 4.0 | kW | $T_j$ = + 12°C | COPd | 7.28 | - |
| $T_j$= zweiwertige Temperatur | Pdh | 10.7 | kW | $T_j$ = zweiwertige Temperatur | COPd | 2.12 | - |
| $T_j$= Betriebsgrenztemperatur | Pdh | 9.9 | kW | $T_j$ = Betriebsgrenztemperatur | COPd | 1.82 | - |
| Für Luft/Wasser-Wärmepumpen: $T_j$ = – 15 °C (wenn TOL < – 20 °C) | Pdh | N/A | kW | Für Luft/Wasser-Wärmepumpen: Tj = – 15 °C (wenn TOL < – 20 °C) | COPd | N/A | - |
| Zweiwertige Temperatur | $T_{biv}$ | -7 | °C | Für Luft/Wasser-Wärmepumpen: Betriebsgrenztemperatur | TOL | -10 | °C |
| Zyklusintervallkapazität für Heizung | $P_{cych}$ | N/A | kW | Zyklus-Intervall-Effizienz | $COP_{cyc}$ | N/A | - |
| Abbaukoeffizient (**) | $C_{dh}$ | 0.9 | kW | Betriebsgrenztemperatur Heizwasser | WTOL | 65 | °C |
| Stromverbrauch in anderen Modi als dem aktiven Modus | | | | Zusatzheizung | | | |
| Aus-Modus | $P_{OFF}$ | 0.014 | kW | | | | |
| Thermostat-Aus-Modus | $P_{TO}$ | 0.024 | kW | Nennwärmeleistung (**) | $P_{sup}$ | 2.1 | kW |
| Standby Modus | $P_{SB}$ | 0.014 | kW | | | | |
| Kurbelgehäuseheizungsmodus | $P_{CK}$ | 0.000 | kW | Art der Energiezufuhr | Elektrisch | | |

| | | | | | | | |
|---|---|---|---|---|---|---|---|
| **Andere Dinge** | | | | | | | |
| Kapazitätskontrolle | Variable | | | Bei Luft/Wasser-Wärmepumpen: Nennluftvolumenstrom, außen | - | 5000 | $m^3/h$ |
| Schallleistungspegel, innen/außen | $L_{WA}$ | -/64 | dB | Für Wasser- oder Sole/Wasser-Wärmepumpen: Sole- oder Wasser- Nennvolumenstrom Außenwärmetauscher | - | N/A | $m^3/h$ |
| Jährlicher Energieverbrauch | $Q_{HE}$ | 7224 | kWh | | | | |
| Für Kombiheizgeräte mit Wärmepumpe: | | | | | | | |
| **Deklariertes Lastprofil** | N/A | | | **Energieeffizienz der Warmwasserbereitung** | $\eta_{wh}$ | N/A | % |
| Täglicher Stromverbrauch | $Q_{elec}$ | N/A | kWh | Täglicher Kraftstoffverbrauch | $Q_{fuel}$ | N/A | kWh |
| Jährlicher Stromverbrauch | AEC | N/A | kWh | Jährlicher Kraftstoffverbrauch | AFC | N/A | GJ |
| Kontaktdetails | Siehe Rückseite des Handbuchs | | | | | | |

(*) Bei Raumheizgeräten mit Wärmepumpe und Kombiheizgeräten mit Wärmepumpe ist die Nennwärmeleistung Prated gleich der Auslegungslast zum Heizen Pdesignh, und die Nennwärmeleistung eines Zusatzheizgeräts Psup ist gleich der Zusatzleistung zum Heizen sup(Tj ). (**) Wenn Cdh nicht durch Messung bestimmt wird, ist der Standard-Degradationskoeffizient Cdh = 0,9.

# Technisch Parameter

| | |
|---|---|
| Modell(s): | 12kW (Heizung 3kW) ;12kW |
| Luft-Wasser-Wärmepumpe | Ja |
| Wasser-Wasser-Wärmepumpe | nien |
| Sole/Wasser Wärmepumpe | nein |
| Niedertemperatur-Wärmepumpe | nein |
| Ausgestattet mit einer Zusatzheizung | Ja(für 12kW(Heizung 3kW))nein(für 12kW) |
| Kombiheizgerät mit Wärmepumpe | nein |
| Deklarierter Klimazustand; | Wärmer |
| Parameter werden für die Anwendung bei mittlerer Temperatur deklariert. | |

| Artikel | Symbol | Wert | Einheit | Artikel | Symbol | Wert | Einheit |
|---|---|---|---|---|---|---|---|
| **Nennwärmeleistung (*)** | Bewertet | 12 | kW | **Saisonale Raumheizungs-Energieeffizienz** | $\eta_s$ | 174 | % |
| Angegebene Heizleistung bei Teillast bei Innentemperatur 20 °C und Außentemperatur $T_j$ | | | | Angegebene Heizleistung für Teillast bei Innentemperatur 20 °C und Außentemperatur $T_j$ | | | |
| $T_j$ = – 7°C | Bewertet | N/A | kW | $T_j$= – 7°C | COPd | N/A | - |
| $T_j$ = + 2°C | Pdh | 12.1 | kW | $T_j$ = + 2°C | COPd | 2.27 | - |
| $T_j$ = +7°C | Pdh | 8.0 | kW | $T_j$= +7°C | COPd | 3.76 | - |
| $T_j$ = + 12°C | Pdh | 4.3 | kW | $T_j$ = + 12°C | COPd | 5.95 | - |
| $T_j$= zweiwertige Temperatur | Pdh | 8.0 | kW | $T_j$ = zweiwertige Temperatur | COPd | 3.76 | - |
| $T_j$= Betriebsgrenztemperatur | Pdh | 12.1 | kW | $T_j$ = Betriebsgrenztemperatur | COPd | 2.27 | - |
| Für Luft/Wasser-Wärmepumpen: $T_j$ = – 15 °C (wenn TOL < – 20 °C) | Pdh | N/A | kW | Für Luft/Wasser-Wärmepumpen: Tj = – 15 °C (wenn TOL < – 20 °C) | COPd | N/A | - |
| Zweiwertige Temperatur | $T_{biv}$ | 7 | °C | Für Luft/Wasser-Wärmepumpen: Betriebsgrenztemperatur | TOL | 2 | °C |
| Zyklusintervallkapazität für Heizung | $P_{cych}$ | N/A | kW | Zyklus-Intervall-Effizienz | $COP_{cyc}$ | N/A | - |
| Abbaukoeffizient (**) | $C_{dh}$ | 0.9 | kW | Betriebsgrenztemperatur Heizwasser | WTOL | 65 | °C |
| Stromverbrauch in anderen Modi als dem aktiven Modus | | | | Zusatzheizung | | | |
| Aus-Modus | $P_{OFF}$ | 0.014 | kW | | | | |
| Thermostat-Aus-Modus | $P_{TO}$ | 0.024 | kW | Nennwärmeleistung (**) | $P_{sup}$ | 0.0 | kW |
| Standby Modus | $P_{SB}$ | 0.014 | kW | | | | |
| Kurbelgehäuseheizungsmodus | $P_{CK}$ | 0.000 | kW | Art der Energiezufuhr | Elektrisch | | |

| | | | | | | | |
|---|---|---|---|---|---|---|---|
| **Andere Dinge** | | | | | | | |
| Kapazitätskontrolle | Variable | | | Bei Luft/Wasser-Wärmepumpen: Nennluftvolumenstrom, außen | - | 5000 | $m^3/h$ |
| Schallleistungspegel, innen/außen | $L_{WA}$ | -/64 | dB | Für Wasser- oder Sole/Wasser-Wärmepumpen: Sole- oder Wasser- Nennvolumenstrom Außenwärmetauscher | - | N/A | $m^3/h$ |
| Jährlicher Energieverbrauch | $Q_{HE}$ | 3761 | kWh | | | | |
| Für Kombiheizgeräte mit Wärmepumpe: | | | | | | | |
| **Deklariertes Lastprofil** | N/A | | | **Energieeffizienz der Warmwasserbereitung** | $\eta_{wh}$ | N/A | % |
| Täglicher Stromverbrauch | $Q_{elec}$ | N/A | kWh | Täglicher Kraftstoffverbrauch | $Q_{fuel}$ | N/A | kWh |
| Jährlicher Stromverbrauch | AEC | N/A | kWh | Jährlicher Kraftstoffverbrauch | AFC | N/A | GJ |
| Kontaktdetails | Siehe Rückseite des Handbuchs | | | | | | |

(*) Bei Raumheizgeräten mit Wärmepumpe und Kombiheizgeräten mit Wärmepumpe ist die Nennwärmeleistung Prated gleich der Auslegungslast zum Heizen Pdesignh, und die Nennwärmeleistung eines Zusatzheizgeräts Psup ist gleich der Zusatzleistung zum Heizen sup(Tj ). (**) Wenn Cdh nicht durch Messung bestimmt wird, ist der Standard-Degradationskoeffizient Cdh = 0,9.

# Technisch Parameter

| | |
|---|---|
| Modell(s): | 12kW (Heizung 3kW) ;12kW |
| Luft-Wasser-Wärmepumpe | Ja |
| Wasser-Wasser-Wärmepumpe | nien |
| Sole/Wasser Wärmepumpe | nein |
| Niedertemperatur-Wärmepumpe | nein |
| Ausgestattet mit einer Zusatzheizung | Ja(für 12kW(Heizung 3kW))nein(für 12kW) |
| Kombiheizgerät mit Wärmepumpe | nein |
| Deklarierter Klimazustand; | Kälter |
| Parameter werden für die Anwendung bei mittlerer Temperatur deklariert. | |

| Artikel | Symbol | Wert | Einheit | Artikel | Symbol | Wert | Einheit |
|---|---|---|---|---|---|---|---|
| **Nennwärmeleistung (*)** | Bewertet | 10 | kW | **Saisonale Raumheizungs-Energieeffizienz** | $\eta_s$ | 119 | % |
| Angegebene Heizleistung bei Teillast bei Innentemperatur 20 °C und Außentemperatur $T_j$ | | | | Angegebene Heizleistung für Teillast bei Innentemperatur 20 °C und Außentemperatur $T_j$ | | | |
| $T_j$ = – 7°C | Bewertet | 6.7 | kW | $T_j$= – 7°C | COPd | 2.58 | - |
| $T_j$ = + 2°C | Pdh | 4.0 | kW | $T_j$ = + 2°C | COPd | 3.68 | - |
| $T_j$ = +7°C | Pdh | 2.9 | kW | $T_j$= +7°C | COPd | 4.57 | - |
| $T_j$ = + 12°C | Pdh | 3.3 | kW | $T_j$ = + 12°C | COPd | 6.59 | - |
| $T_j$= zweiwertige Temperatur | Pdh | 8.5 | kW | $T_j$ = zweiwertige Temperatur | COPd | 1.84 | - |
| $T_j$= Betriebsgrenztemperatur | Pdh | 4.6 | kW | $T_j$ = Betriebsgrenztemperatur | COPd | 1.21 | - |
| Für Luft/Wasser-Wärmepumpen: $T_j$ = – 15 °C (wenn TOL < – 20 °C) | Pdh | N/A | kW | Für Luft/Wasser-Wärmepumpen: Tj = – 15 °C (wenn TOL < – 20 °C) | COPd | N/A | - |
| Zweiwertige Temperatur | $T_{biv}$ | -15 | °C | Für Luft/Wasser-Wärmepumpen: Betriebsgrenztemperatur | TOL | -22 | °C |
| Zyklusintervallkapazität für Heizung | $P_{cych}$ | N/A | kW | Zyklus-Intervall-Effizienz | $COP_{cyc}$ | N/A | - |
| Abbaukoeffizient (**) | $C_{dh}$ | 0.9 | kW | Betriebsgrenztemperatur Heizwasser | WTOL | 65 | °C |
| Stromverbrauch in anderen Modi als dem aktiven Modus | | | | Zusatzheizung | | | |
| Aus-Modus | $P_{OFF}$ | 0.014 | kW | | | | |
| Thermostat-Aus-Modus | $P_{TO}$ | 0.024 | kW | Nennwärmeleistung (**) | $P_{sup}$ | 5.4 | kW |
| Standby Modus | $P_{SB}$ | 0.014 | kW | | | | |
| Kurbelgehäuseheizungsmodus | $P_{CK}$ | 0.000 | kW | Art der Energiezufuhr | Elektrisch | | |

| | | | | | | | |
|---|---|---|---|---|---|---|---|
| **Andere Dinge** | | | | | | | |
| Kapazitätskontrolle | Variable | | | Bei Luft/Wasser-Wärmepumpen: Nennluftvolumenstrom, außen | - | 5000 | $m^3/h$ |
| Schallleistungspegel, innen/außen | $L_{WA}$ | -/64 | dB | Für Wasser- oder Sole/Wasser-Wärmepumpen: Sole- oder Wasser- Nennvolumenstrom Außenwärmetauscher | - | N/A | $m^3/h$ |
| Jährlicher Energieverbrauch | $Q_{HE}$ | 8470 | kWh | | | | |
| Für Kombiheizgeräte mit Wärmepumpe: | | | | | | | |
| **Deklariertes Lastprofil** | N/A | | | **Energieeffizienz der Warmwasserbereitung** | $\eta_{wh}$ | N/A | % |
| Täglicher Stromverbrauch | $Q_{elec}$ | N/A | kWh | Täglicher Kraftstoffverbrauch | $Q_{fuel}$ | N/A | kWh |
| Jährlicher Stromverbrauch | AEC | N/A | kWh | Jährlicher Kraftstoffverbrauch | AFC | N/A | GJ |
| Kontaktdetails | Siehe Rückseite des Handbuchs | | | | | | |

(*) Bei Raumheizgeräten mit Wärmepumpe und Kombiheizgeräten mit Wärmepumpe ist die Nennwärmeleistung Prated gleich der Auslegungslast zum Heizen Pdesignh, und die Nennwärmeleistung eines Zusatzheizgeräts Psup ist gleich der Zusatzleistung zum Heizen sup(Tj ). (**) Wenn Cdh nicht durch Messung bestimmt wird, ist der Standard-Degradationskoeffizient Cdh = 0,9.

# Technisch Parameter

| | |
|---|---|
| Modell(s): | 14kW (Heizung 3kW) ;14kW |
| Luft-Wasser-Wärmepumpe | Ja |
| Wasser-Wasser-Wärmepumpe | nien |
| Sole/Wasser Wärmepumpe | nein |
| Niedertemperatur-Wärmepumpe | nein |
| Ausgestattet mit einer Zusatzheizung | Ja(für 14kW(Heizung 3kW))nein(für 14kW) |
| Kombiheizgerät mit Wärmepumpe | nein |
| Deklarierter Klimazustand; | Durchschnitt |
| Parameter sind für Anwendungen bei niedrigen Temperaturen deklariert. | |

| Artikel | Symbol | Wert | Einheit | Artikel | Symbol | Wert | Einheit |
|---|---|---|---|---|---|---|---|
| **Nennwärmeleistung (*)** | Bewertet | 14 | kW | **Saisonale Raumheizungs-Energieeffizienz** | $\eta_s$ | 182 | % |
| Angegebene Heizleistung bei Teillast bei Innentemperatur 20 °C und Außentemperatur $T_j$ | | | | Angegebene Heizleistung für Teillast bei Innentemperatur 20 °C und Außentemperatur $T_j$ | | | |
| $T_j$ = – 7°C | Bewertet | 12.4 | kW | $T_j$= – 7°C | COPd | 2.80 | - |
| $T_j$ = + 2°C | Pdh | 7.5 | kW | $T_j$ = + 2°C | COPd | 4.38 | - |
| $T_j$ = +7°C | Pdh | 5.2 | kW | $T_j$= +7°C | COPd | 6.53 | - |
| $T_j$ = + 12°C | Pdh | 4.5 | kW | $T_j$ = + 12°C | COPd | 8.58 | - |
| $T_j$= zweiwertige Temperatur | Pdh | 12.4 | kW | $T_j$ = zweiwertige Temperatur | COPd | 2.80 | - |
| $T_j$= Betriebsgrenztemperatur | Pdh | 12.8 | kW | $T_j$ = Betriebsgrenztemperatur | COPd | 2.51 | - |
| Für Luft/Wasser-Wärmepumpen: $T_j$ = – 15 °C (wenn TOL < – 20 °C) | Pdh | N/A | kW | Für Luft/Wasser-Wärmepumpen: Tj = – 15 °C (wenn TOL < – 20 °C) | COPd | N/A | - |
| Zweiwertige Temperatur | $T_{biv}$ | -7 | °C | Für Luft/Wasser-Wärmepumpen: Betriebsgrenztemperatur | TOL | 10 | |
| Zyklusintervallkapazität für Heizung | $P_{cych}$ | N/A | kW | Zyklus-Intervall-Effizienz | $COP_{cyc}$ | N/A | - |
| Abbaukoeffizient (**) | $C_{dh}$ | 0.9 | kW | Betriebsgrenztemperatur Heizwasser | WTOL | 65 | °C |
| Stromverbrauch in anderen Modi als dem aktiven Modus | | | | Zusatzheizung | | | |
| Aus-Modus | $P_{OFF}$ | 0.014 | kW | | | | |
| Thermostat-Aus-Modus | $P_{TO}$ | 0.024 | kW | Nennwärmeleistung (**) | $P_{sup}$ | 1.2 | kW |
| Standby Modus | $P_{SB}$ | 0.014 | kW | | | | |
| Kurbelgehäuseheizungsmodus | $P_{CK}$ | 0.000 | kW | Art der Energiezufuhr | Elektrisch | | |

| | | | | | | | |
|---|---|---|---|---|---|---|---|
| **Andere Dinge** | | | | | | | |
| Kapazitätskontrolle | Variable | | | Bei Luft/Wasser-Wärmepumpen: Nennluftvolumenstrom, außen | - | 5500 | $m^3/h$ |
| Schallleistungspegel, innen/außen | $L_{WA}$ | -/66 | dB | Für Wasser- oder Sole/Wasser-Wärmepumpen: Sole- oder Wasser- Nennvolumenstrom Außenwärmetauscher | - | N/A | $m^3/h$ |
| Jährlicher Energieverbrauch | $Q_{HE}$ | 6238 | kWh | | | | |
| Für Kombiheizgeräte mit Wärmepumpe: | | | | | | | |
| **Deklariertes Lastprofil** | N/A | | | **Energieeffizienz der Warmwasserbereitung** | $\eta_{wh}$ | N/A | % |
| Täglicher Stromverbrauch | $Q_{elec}$ | N/A | kWh | Täglicher Kraftstoffverbrauch | $Q_{fuel}$ | N/A | kWh |
| Jährlicher Stromverbrauch | AEC | N/A | kWh | Jährlicher Kraftstoffverbrauch | AFC | N/A | GJ |
| Kontaktdetails | Siehe Rückseite des Handbuchs | | | | | | |

(*) Bei Raumheizgeräten mit Wärmepumpe und Kombiheizgeräten mit Wärmepumpe ist die Nennwärmeleistung Prated gleich der Auslegungslast zum Heizen Pdesignh, und die Nennwärmeleistung eines Zusatzheizgeräts Psup ist gleich der Zusatzleistung zum Heizen sup(Tj ). (**) Wenn Cdh nicht durch Messung bestimmt wird, ist der Standard-Degradationskoeffizient Cdh = 0,9.

# Technisch Parameter

| | |
|---|---|
| Modell(s): | 14kW (Heizung 3kW) ;14kW |
| Luft-Wasser-Wärmepumpe | Ja |
| Wasser-Wasser-Wärmepumpe | nien |
| Sole/Wasser Wärmepumpe | nein |
| Niedertemperatur-Wärmepumpe | nein |
| Ausgestattet mit einer Zusatzheizung | Ja(für 14kW(Heizung 3kW))nein(für 14kW) |
| Kombiheizgerät mit Wärmepumpe | nein |
| Deklarierter Klimazustand; | Wärmer |
| Parameter sind für Anwendungen bei niedrigen Temperaturen deklariert. | |

| Artikel | Symbol | Wert | Einheit | Artikel | Symbol | Wert | Einheit |
|---|---|---|---|---|---|---|---|
| **Nennwärmeleistung (*)** | Bewertet | 12 | kW | **Saisonale Raumheizungs-Energieeffizienz** | $\eta_s$ | 248 | % |
| Angegebene Heizleistung bei Teillast bei Innentemperatur 20 °C und Außentemperatur $T_j$ | | | | Angegebene Heizleistung für Teillast bei Innentemperatur 20 °C und Außentemperatur $T_j$ | | | |
| $T_j$ = – 7°C | Bewertet | N/A | kW | $T_j$= – 7°C | COPd | 2.58 | - |
| $T_j$ = + 2°C | Pdh | 12.3 | kW | $T_j$ = + 2°C | COPd | 3.68 | - |
| $T_j$ = +7°C | Pdh | 8.0 | kW | $T_j$= +7°C | COPd | 4.57 | - |
| $T_j$ = + 12°C | Pdh | 4.2 | kW | $T_j$ = + 12°C | COPd | 6.59 | - |
| $T_j$= zweiwertige Temperatur | Pdh | 8.0 | kW | $T_j$ = zweiwertige Temperatur | COPd | 1.84 | - |
| $T_j$= Betriebsgrenztemperatur | Pdh | 12.3 | kW | $T_j$ = Betriebsgrenztemperatur | COPd | 1.21 | - |
| Für Luft/Wasser-Wärmepumpen: $T_j$ = – 15 °C (wenn TOL < – 20 °C) | Pdh | N/A | kW | Für Luft/Wasser-Wärmepumpen: Tj = – 15 °C (wenn TOL < – 20 °C) | COPd | N/A | - |
| Zweiwertige Temperatur | $T_{biv}$ | 7 | °C | Für Luft/Wasser-Wärmepumpen: Betriebsgrenztemperatur | TOL | -22 | °C |
| Zyklusintervallkapazität für Heizung | $P_{cych}$ | N/A | kW | Zyklus-Intervall-Effizienz | $COP_{cyc}$ | N/A | - |
| Abbaukoeffizient (**) | $C_{dh}$ | 0.9 | kW | Betriebsgrenztemperatur Heizwasser | WTOL | 65 | °C |
| Stromverbrauch in anderen Modi als dem aktiven Modus | | | | Zusatzheizung | | | |
| Aus-Modus | $P_{OFF}$ | 0.014 | kW | | | | |
| Thermostat-Aus-Modus | $P_{TO}$ | 0.024 | kW | Nennwärmeleistung (**) | $P_{sup}$ | 5.4 | kW |
| Standby Modus | $P_{SB}$ | 0.014 | kW | | | | |
| Kurbelgehäuseheizungsmodus | $P_{CK}$ | 0.000 | kW | Art der Energiezufuhr | Elektrisch | | |

| | | | | | | | |
|---|---|---|---|---|---|---|---|
| **Andere Dinge** | | | | | | | |
| Kapazitätskontrolle | Variable | | | Bei Luft/Wasser-Wärmepumpen: Nennluftvolumenstrom, außen | - | 5000 | $m^3/h$ |
| Schallleistungspegel, innen/außen | $L_{WA}$ | -/66 | dB | Für Wasser- oder Sole/Wasser-Wärmepumpen: Sole- oder Wasser- Nennvolumenstrom Außenwärmetauscher | - | N/A | $m^3/h$ |
| Jährlicher Energieverbrauch | $Q_{HE}$ | 2638 | kWh | | | | |
| Für Kombiheizgeräte mit Wärmepumpe: | | | | | | | |
| **Deklariertes Lastprofil** | N/A | | | **Energieeffizienz der Warmwasserbereitung** | $\eta_{wh}$ | N/A | % |
| Täglicher Stromverbrauch | $Q_{elec}$ | N/A | kWh | Täglicher Kraftstoffverbrauch | $Q_{fuel}$ | N/A | kWh |
| Jährlicher Stromverbrauch | AEC | N/A | kWh | Jährlicher Kraftstoffverbrauch | AFC | N/A | GJ |
| Kontaktdetails | Siehe Rückseite des Handbuchs | | | | | | |

(*) Bei Raumheizgeräten mit Wärmepumpe und Kombiheizgeräten mit Wärmepumpe ist die Nennwärmeleistung Prated gleich der Auslegungslast zum Heizen Pdesignh, und die Nennwärmeleistung eines Zusatzheizgeräts Psup ist gleich der Zusatzleistung zum Heizen sup(Tj ). (**) Wenn Cdh nicht durch Messung bestimmt wird, ist der Standard-Degradationskoeffizient Cdh = 0,9.

# Technisch Parameter

| | |
|---|---|
| Modell(s): | 14kW (Heizung 3kW) ;14kW |
| Luft-Wasser-Wärmepumpe | Ja |
| Wasser-Wasser-Wärmepumpe | nien |
| Sole/Wasser Wärmepumpe | nein |
| Niedertemperatur-Wärmepumpe | nein |
| Ausgestattet mit einer Zusatzheizung | Ja(für 14kW(Heizung 3kW))nein(für 14kW) |
| Kombiheizgerät mit Wärmepumpe | nein |
| Deklarierter Klimazustand; | Kälter |
| Parameter sind für Anwendungen bei niedrigen Temperaturen deklariert. | |

| Artikel | Symbol | Wert | Einheit | Artikel | Symbol | Wert | Einheit |
|---|---|---|---|---|---|---|---|
| **Nennwärmeleistung (*)** | Bewertet | 13 | kW | **Saisonale Raumheizungs-Energieeffizienz** | $\eta_s$ | 156 | % |
| Angegebene Heizleistung bei Teillast bei Innentemperatur 20 °C und Außentemperatur $T_j$ | | | | Angegebene Heizleistung für Teillast bei Innentemperatur 20 °C und Außentemperatur $T_j$ | | | |
| $T_j$ = – 7°C | Bewertet | 8.2 | kW | $T_j$= – 7°C | COPd | 3.35 | - |
| $T_j$ = + 2°C | Pdh | 4.6 | kW | $T_j$ = + 2°C | COPd | 4.72 | - |
| $T_j$ = +7°C | Pdh | 3.4 | kW | $T_j$= +7°C | COPd | 6.10 | - |
| $T_j$ = + 12°C | Pdh | 3.8 | kW | $T_j$ = + 12°C | COPd | 8.00 | - |
| $T_j$= zweiwertige Temperatur | Pdh | 10.6 | kW | $T_j$ = zweiwertige Temperatur | COPd | 2.55 | - |
| $T_j$= Betriebsgrenztemperatur | Pdh | 7.9 | kW | $T_j$ = Betriebsgrenztemperatur | COPd | 2.10 | - |
| Für Luft/Wasser-Wärmepumpen: $T_j$ = – 15 °C (wenn TOL < – 20 °C) | Pdh | N/A | kW | Für Luft/Wasser-Wärmepumpen: Tj = – 15 °C (wenn TOL < – 20 °C) | COPd | N/A | - |
| Zweiwertige Temperatur | $T_{biv}$ | -15 | °C | Für Luft/Wasser-Wärmepumpen: Betriebsgrenztemperatur | TOL | -22 | °C |
| Zyklusintervallkapazität für Heizung | $P_{cych}$ | N/A | kW | Zyklus-Intervall-Effizienz | $COP_{cyc}$ | N/A | - |
| Abbaukoeffizient (**) | $C_{dh}$ | 0.9 | kW | Betriebsgrenztemperatur Heizwasser | WTOL | 65 | °C |
| Stromverbrauch in anderen Modi als dem aktiven Modus | | | | Zusatzheizung | | | |
| Aus-Modus | $P_{OFF}$ | 0.014 | kW | | | | |
| Thermostat-Aus-Modus | $P_{TO}$ | 0.024 | kW | Nennwärmeleistung (**) | $P_{sup}$ | 5.1 | kW |
| Standby Modus | $P_{SB}$ | 0.014 | kW | | | | |
| Kurbelgehäuseheizungsmodus | $P_{CK}$ | 0.000 | kW | Art der Energiezufuhr | Elektrisch | | |

| | | | | | | | |
|---|---|---|---|---|---|---|---|
| **Andere Dinge** | | | | | | | |
| Kapazitätskontrolle | Variable | | | Bei Luft/Wasser-Wärmepumpen: Nennluftvolumenstrom, außen | - | 5500 | $m^3/h$ |
| Schallleistungspegel, innen/außen | $L_{WA}$ | -/66 | dB | Für Wasser- oder Sole/Wasser-Wärmepumpen: Sole- oder Wasser- Nennvolumenstrom Außenwärmetauscher | - | N/A | $m^3/h$ |
| Jährlicher Energieverbrauch | $Q_{HE}$ | 8111 | kWh | | | | |
| Für Kombiheizgeräte mit Wärmepumpe: | | | | | | | |
| **Deklariertes Lastprofil** | N/A | | | **Energieeffizienz der Warmwasserbereitung** | $\eta_{wh}$ | N/A | % |
| Täglicher Stromverbrauch | $Q_{elec}$ | N/A | kWh | Täglicher Kraftstoffverbrauch | $Q_{fuel}$ | N/A | kWh |
| Jährlicher Stromverbrauch | AEC | N/A | kWh | Jährlicher Kraftstoffverbrauch | AFC | N/A | GJ |
| Kontaktdetails | Siehe Rückseite des Handbuchs | | | | | | |

(*) Bei Raumheizgeräten mit Wärmepumpe und Kombiheizgeräten mit Wärmepumpe ist die Nennwärmeleistung Prated gleich der Auslegungslast zum Heizen Pdesignh, und die Nennwärmeleistung eines Zusatzheizgeräts Psup ist gleich der Zusatzleistung zum Heizen sup(Tj ). (**) Wenn Cdh nicht durch Messung bestimmt wird, ist der Standard-Degradationskoeffizient Cdh = 0,9.

# Technisch Parameter

| | |
|---|---|
| Modell(s): | 14kW (Heizung 3kW) ;14kW |
| Luft-Wasser-Wärmepumpe | Ja |
| Wasser-Wasser-Wärmepumpe | nien |
| Sole/Wasser Wärmepumpe | nein |
| Niedertemperatur-Wärmepumpe | nein |
| Ausgestattet mit einer Zusatzheizung | Ja(für 14kW(Heizung 3kW))nein(für 14kW) |
| Kombiheizgerät mit Wärmepumpe | nein |
| Deklarierter Klimazustand; | Durchschnitt |
| Parameter werden für die Anwendung bei mittlerer Temperatur deklariert. | |

| Artikel | Symbol | Wert | Einheit | Artikel | Symbol | Wert | Einheit |
|---|---|---|---|---|---|---|---|
| **Nennwärmeleistung (*)** | Bewertet | 12 | kW | **Saisonale Raumheizungs-Energieeffizienz** | $\eta_s$ | 134 | % |
| Angegebene Heizleistung bei Teillast bei Innentemperatur 20 °C und Außentemperatur $T_j$ | | | | Angegebene Heizleistung für Teillast bei Innentemperatur 20 °C und Außentemperatur $T_j$ | | | |
| $T_j$ = – 7°C | Bewertet | 10.9 | kW | $T_j$= – 7°C | COPd | 1.99 | - |
| $T_j$ = + 2°C | Pdh | 6.9 | kW | $T_j$ = + 2°C | COPd | 3.26 | - |
| $T_j$ = +7°C | Pdh | 4.5 | kW | $T_j$= +7°C | COPd | 4.79 | - |
| $T_j$ = + 12°C | Pdh | 4.0 | kW | $T_j$ = + 12°C | COPd | 7.25 | - |
| $T_j$= zweiwertige Temperatur | Pdh | 10.9 | kW | $T_j$ = zweiwertige Temperatur | COPd | 1.99 | - |
| $T_j$= Betriebsgrenztemperatur | Pdh | 10.3 | kW | $T_j$ = Betriebsgrenztemperatur | COPd | 1.81 | - |
| Für Luft/Wasser-Wärmepumpen: $T_j$ = – 15 °C (wenn TOL < – 20 °C) | Pdh | N/A | kW | Für Luft/Wasser-Wärmepumpen: Tj = – 15 °C (wenn TOL < – 20 °C) | COPd | N/A | - |
| Zweiwertige Temperatur | $T_{biv}$ | -7 | °C | Für Luft/Wasser-Wärmepumpen: Betriebsgrenztemperatur | TOL | -10 | °C |
| Zyklusintervallkapazität für Heizung | $P_{cych}$ | N/A | kW | Zyklus-Intervall-Effizienz | $COP_{cyc}$ | N/A | - |
| Abbaukoeffizient (**) | $C_{dh}$ | 0.9 | kW | Betriebsgrenztemperatur Heizwasser | WTOL | 65 | °C |
| Stromverbrauch in anderen Modi als dem aktiven Modus | | | | Zusatzheizung | | | |
| Aus-Modus | $P_{OFF}$ | 0.014 | kW | | | | |
| Thermostat-Aus-Modus | $P_{TO}$ | 0.024 | kW | Nennwärmeleistung (**) | $P_{sup}$ | 1.7 | kW |
| Standby Modus | $P_{SB}$ | 0.014 | kW | | | | |
| Kurbelgehäuseheizungsmodus | $P_{CK}$ | 0.000 | kW | Art der Energiezufuhr | Elektrisch | | |

| | | | | | | | |
|---|---|---|---|---|---|---|---|
| **Andere Dinge** | | | | | | | |
| Kapazitätskontrolle | Variable | | | Bei Luft/Wasser-Wärmepumpen: Nennluftvolumenstrom, außen | - | 5500 | $m^3/h$ |
| Schallleistungspegel, innen/außen | $L_{WA}$ | -/66 | dB | Für Wasser- oder Sole/Wasser-Wärmepumpen: Sole- oder Wasser- Nennvolumenstrom Außenwärmetauscher | - | N/A | $m^3/h$ |
| Jährlicher Energieverbrauch | $Q_{HE}$ | 7427 | kWh | | | | |
| Für Kombiheizgeräte mit Wärmepumpe: | | | | | | | |
| **Deklariertes Lastprofil** | N/A | | | **Energieeffizienz der Warmwasserbereitung** | $\eta_{wh}$ | N/A | % |
| Täglicher Stromverbrauch | $Q_{elec}$ | N/A | kWh | Täglicher Kraftstoffverbrauch | $Q_{fuel}$ | N/A | kWh |
| Jährlicher Stromverbrauch | AEC | N/A | kWh | Jährlicher Kraftstoffverbrauch | AFC | N/A | GJ |
| Kontaktdetails | Siehe Rückseite des Handbuchs | | | | | | |

(*) Bei Raumheizgeräten mit Wärmepumpe und Kombiheizgeräten mit Wärmepumpe ist die Nennwärmeleistung Prated gleich der Auslegungslast zum Heizen Pdesignh, und die Nennwärmeleistung eines Zusatzheizgeräts Psup ist gleich der Zusatzleistung zum Heizen sup(Tj ). (**) Wenn Cdh nicht durch Messung bestimmt wird, ist der Standard-Degradationskoeffizient Cdh = 0,9.

# Technisch Parameter

| | |
|---|---|
| Modell(s): | 14kW (Heizung 3kW) ;14kW |
| Luft-Wasser-Wärmepumpe | Ja |
| Wasser-Wasser-Wärmepumpe | nien |
| Sole/Wasser Wärmepumpe | nein |
| Niedertemperatur-Wärmepumpe | nein |
| Ausgestattet mit einer Zusatzheizung | Ja(für 14kW(Heizung 3kW))nein(für 14kW) |
| Kombiheizgerät mit Wärmepumpe | nein |
| Deklarierter Klimazustand; | Wärmer |
| Parameter werden für die Anwendung bei mittlerer Temperatur deklariert. | |

| Artikel | Symbol | Wert | Einheit | Artikel | Symbol | Wert | Einheit |
|---|---|---|---|---|---|---|---|
| **Nennwärmeleistung (*)** | Bewertet | 14 | kW | **Saisonale Raumheizungs-Energieeffizienz** | $\eta_s$ | 170 | % |
| Angegebene Heizleistung bei Teillast bei Innentemperatur 20 °C und Außentemperatur $T_j$ | | | | Angegebene Heizleistung für Teillast bei Innentemperatur 20 °C und Außentemperatur $T_j$ | | | |
| $T_j$ = – 7°C | Bewertet | N/A | kW | $T_j$= – 7°C | COPd | N/A | - |
| $T_j$ = + 2°C | Pdh | 13.1 | kW | $T_j$ = + 2°C | COPd | 2.25 | - |
| $T_j$ = +7°C | Pdh | 9.0 | kW | $T_j$= +7°C | COPd | 3.61 | - |
| $T_j$ = + 12°C | Pdh | 4.1 | kW | $T_j$ = + 12°C | COPd | 5.94 | - |
| $T_j$= zweiwertige Temperatur | Pdh | 9.0 | kW | $T_j$ = zweiwertige Temperatur | COPd | 3.61 | - |
| $T_j$= Betriebsgrenztemperatur | Pdh | 13.1 | kW | $T_j$ = Betriebsgrenztemperatur | COPd | 2.25 | - |
| Für Luft/Wasser-Wärmepumpen: $T_j$ = – 15 °C (wenn TOL < – 20 °C) | Pdh | N/A | kW | Für Luft/Wasser-Wärmepumpen: Tj = – 15 °C (wenn TOL < – 20 °C) | COPd | N/A | - |
| Zweiwertige Temperatur | $T_{biv}$ | 7 | °C | Für Luft/Wasser-Wärmepumpen: Betriebsgrenztemperatur | TOL | 2 | °C |
| Zyklusintervallkapazität für Heizung | $P_{cych}$ | N/A | kW | Zyklus-Intervall-Effizienz | $COP_{cyc}$ | N/A | - |
| Abbaukoeffizient (**) | $C_{dh}$ | 0.9 | kW | Betriebsgrenztemperatur Heizwasser | WTOL | 65 | °C |
| Stromverbrauch in anderen Modi als dem aktiven Modus | | | | Zusatzheizung | | | |
| Aus-Modus | $P_{OFF}$ | 0.014 | kW | | | | |
| Thermostat-Aus-Modus | $P_{TO}$ | 0.024 | kW | Nennwärmeleistung (**) | $P_{sup}$ | 0.9 | kW |
| Standby Modus | $P_{SB}$ | 0.014 | kW | | | | |
| Kurbelgehäuseheizungsmodus | $P_{CK}$ | 0.000 | kW | Art der Energiezufuhr | Elektrisch | | |

| | | | | | | | |
|---|---|---|---|---|---|---|---|
| **Andere Dinge** | | | | | | | |
| Kapazitätskontrolle | Variable | | | Bei Luft/Wasser-Wärmepumpen: Nennluftvolumenstrom, außen | - | 5500 | $m^3/h$ |
| Schallleistungspegel, innen/außen | $L_{WA}$ | -/66 | dB | Für Wasser- oder Sole/Wasser-Wärmepumpen: Sole- oder Wasser- Nennvolumenstrom Außenwärmetauscher | - | N/A | $m^3/h$ |
| Jährlicher Energieverbrauch | $Q_{HE}$ | 4323 | kWh | | | | |
| Für Kombiheizgeräte mit Wärmepumpe: | | | | | | | |
| **Deklariertes Lastprofil** | N/A | | | **Energieeffizienz der Warmwasserbereitung** | $\eta_{wh}$ | N/A | % |
| Täglicher Stromverbrauch | $Q_{elec}$ | N/A | kWh | Täglicher Kraftstoffverbrauch | $Q_{fuel}$ | N/A | kWh |
| Jährlicher Stromverbrauch | AEC | N/A | kWh | Jährlicher Kraftstoffverbrauch | AFC | N/A | GJ |
| Kontaktdetails | Siehe Rückseite des Handbuchs | | | | | | |

(*) Bei Raumheizgeräten mit Wärmepumpe und Kombiheizgeräten mit Wärmepumpe ist die Nennwärmeleistung Prated gleich der Auslegungslast zum Heizen Pdesignh, und die Nennwärmeleistung eines Zusatzheizgeräts Psup ist gleich der Zusatzleistung zum Heizen sup(Tj ). (**) Wenn Cdh nicht durch Messung bestimmt wird, ist der Standard-Degradationskoeffizient Cdh = 0,9.

# Technisch Parameter

| | |
|---|---|
| Modell(s): | 14kW (Heizung 3kW) ;14kW |
| Luft-Wasser-Wärmepumpe | Ja |
| Wasser-Wasser-Wärmepumpe | nien |
| Sole/Wasser Wärmepumpe | nein |
| Niedertemperatur-Wärmepumpe | nein |
| Ausgestattet mit einer Zusatzheizung | Ja(für 14kW(Heizung 3kW))nein(für 14kW) |
| Kombiheizgerät mit Wärmepumpe | nein |
| Deklarierter Klimazustand; | Kälter |
| Parameter werden für die Anwendung bei mittlerer Temperatur deklariert. | |

| Artikel | Symbol | Wert | Einheit | Artikel | Symbol | Wert | Einheit |
|---|---|---|---|---|---|---|---|
| **Nennwärmeleistung (*)** | Bewertet | 11 | kW | **Saisonale Raumheizungs-Energieeffizienz** | $\eta_s$ | 117 | % |
| Angegebene Heizleistung bei Teillast bei Innentemperatur 20 °C und Außentemperatur $T_j$ | | | | Angegebene Heizleistung für Teillast bei Innentemperatur 20 °C und Außentemperatur $T_j$ | | | |
| $T_j$ = – 7°C | Bewertet | 7.2 | kW | $T_j$= – 7°C | COPd | 2.56 | - |
| $T_j$ = + 2°C | Pdh | 4.2 | kW | $T_j$ = + 2°C | COPd | 3.62 | - |
| $T_j$ = +7°C | Pdh | 3.1 | kW | $T_j$= +7°C | COPd | 4.77 | - |
| $T_j$ = + 12°C | Pdh | 3.6 | kW | $T_j$ = + 12°C | COPd | 6.40 | - |
| $T_j$= zweiwertige Temperatur | Pdh | 8.9 | kW | $T_j$ = zweiwertige Temperatur | COPd | 1.82 | - |
| $T_j$= Betriebsgrenztemperatur | Pdh | 4.4 | kW | $T_j$ = Betriebsgrenztemperatur | COPd | 1.16 | - |
| Für Luft/Wasser-Wärmepumpen: $T_j$ = – 15 °C (wenn TOL < – 20 °C) | Pdh | N/A | kW | Für Luft/Wasser-Wärmepumpen: Tj = – 15 °C (wenn TOL < – 20 °C) | COPd | N/A | - |
| Zweiwertige Temperatur | $T_{biv}$ | -15 | °C | Für Luft/Wasser-Wärmepumpen: Betriebsgrenztemperatur | TOL | -22 | °C |
| Zyklusintervallkapazität für Heizung | $P_{cych}$ | N/A | kW | Zyklus-Intervall-Effizienz | $COP_{cyc}$ | N/A | - |
| Abbaukoeffizient (**) | $C_{dh}$ | 0.9 | kW | Betriebsgrenztemperatur Heizwasser | WTOL | 65 | °C |
| Stromverbrauch in anderen Modi als dem aktiven Modus | | | | Zusatzheizung | | | |
| Aus-Modus | $P_{OFF}$ | 0.014 | kW | | | | |
| Thermostat-Aus-Modus | $P_{TO}$ | 0.024 | kW | Nennwärmeleistung (**) | $P_{sup}$ | 6.6 | kW |
| Standby Modus | $P_{SB}$ | 0.014 | kW | | | | |
| Kurbelgehäuseheizungsmodus | $P_{CK}$ | 0.000 | kW | Art der Energiezufuhr | Elektrisch | | |

| | | | | | | | |
|---|---|---|---|---|---|---|---|
| **Andere Dinge** | | | | | | | |
| Kapazitätskontrolle | Variable | | | Bei Luft/Wasser-Wärmepumpen: Nennluftvolumenstrom, außen | - | 5500 | $m^3/h$ |
| Schallleistungspegel, innen/außen | $L_{WA}$ | -/66 | dB | Für Wasser- oder Sole/Wasser-Wärmepumpen: Sole- oder Wasser- Nennvolumenstrom Außenwärmetauscher | - | N/A | $m^3/h$ |
| Jährlicher Energieverbrauch | $Q_{HE}$ | 8975 | kWh | | | | |
| Für Kombiheizgeräte mit Wärmepumpe: | | | | | | | |
| **Deklariertes Lastprofil** | N/A | | | **Energieeffizienz der Warmwasserbereitung** | $\eta_{wh}$ | N/A | % |
| Täglicher Stromverbrauch | $Q_{elec}$ | N/A | kWh | Täglicher Kraftstoffverbrauch | $Q_{fuel}$ | N/A | kWh |
| Jährlicher Stromverbrauch | AEC | N/A | kWh | Jährlicher Kraftstoffverbrauch | AFC | N/A | GJ |
| Kontaktdetails | Siehe Rückseite des Handbuchs | | | | | | |

(*) Bei Raumheizgeräten mit Wärmepumpe und Kombiheizgeräten mit Wärmepumpe ist die Nennwärmeleistung Prated gleich der Auslegungslast zum Heizen Pdesignh, und die Nennwärmeleistung eines Zusatzheizgeräts Psup ist gleich der Zusatzleistung zum Heizen sup(Tj ). (**) Wenn Cdh nicht durch Messung bestimmt wird, ist der Standard-Degradationskoeffizient Cdh = 0,9.

# Technisch Parameter

| | |
|---|---|
| Modell(s): | 16kW (Heizung 3kW) ;16kW |
| Luft-Wasser-Wärmepumpe | Ja |
| Wasser-Wasser-Wärmepumpe | nien |
| Sole/Wasser Wärmepumpe | nein |
| Niedertemperatur-Wärmepumpe | nein |
| Ausgestattet mit einer Zusatzheizung | Ja(für 16kW(Heizung 3kW))nein(für 16kW) |
| Kombiheizgerät mit Wärmepumpe | nein |
| Deklarierter Klimazustand; | Durchschnitt |
| Parameter sind für Anwendungen bei niedrigen Temperaturen deklariert. | |

| Artikel | Symbol | Wert | Einheit | Artikel | Symbol | Wert | Einheit |
|---|---|---|---|---|---|---|---|
| **Nennwärmeleistung (*)** | Bewertet | 15 | kW | **Saisonale Raumheizungs-Energieeffizienz** | $\eta_s$ | 179 | % |
| Angegebene Heizleistung bei Teillast bei Innentemperatur 20 °C und Außentemperatur $T_j$ | | | | Angegebene Heizleistung für Teillast bei Innentemperatur 20 °C und Außentemperatur $T_j$ | | | |
| $T_j$ = – 7°C | Bewertet | 13.4 | kW | $T_j$= – 7°C | COPd | 2.66 | - |
| $T_j$ = + 2°C | Pdh | 8.0 | kW | $T_j$ = + 2°C | COPd | 4.33 | - |
| $T_j$ = +7°C | Pdh | 5.4 | kW | $T_j$= +7°C | COPd | 6.48 | - |
| $T_j$ = + 12°C | Pdh | 4.6 | kW | $T_j$ = + 12°C | COPd | 8.96 | - |
| $T_j$= zweiwertige Temperatur | Pdh | 13.4 | kW | $T_j$ = zweiwertige Temperatur | COPd | 2.66 | - |
| $T_j$= Betriebsgrenztemperatur | Pdh | 13.4 | kW | $T_j$ = Betriebsgrenztemperatur | COPd | 2.46 | - |
| Für Luft/Wasser-Wärmepumpen: $T_j$ = – 15 °C (wenn TOL < – 20 °C) | Pdh | N/A | kW | Für Luft/Wasser-Wärmepumpen: Tj = – 15 °C (wenn TOL < – 20 °C) | COPd | N/A | - |
| Zweiwertige Temperatur | $T_{biv}$ | -7 | °C | Für Luft/Wasser-Wärmepumpen: Betriebsgrenztemperatur | TOL | -10 | °C |
| Zyklusintervallkapazität für Heizung | $P_{cych}$ | N/A | kW | Zyklus-Intervall-Effizienz | $COP_{cyc}$ | N/A | - |
| Abbaukoeffizient (**) | $C_{dh}$ | 0.9 | kW | Betriebsgrenztemperatur Heizwasser | WTOL | 65 | °C |
| Stromverbrauch in anderen Modi als dem aktiven Modus | | | | Zusatzheizung | | | |
| Aus-Modus | $P_{OFF}$ | 0.014 | kW | | | | |
| Thermostat-Aus-Modus | $P_{TO}$ | 0.024 | kW | Nennwärmeleistung (**) | $P_{sup}$ | 1.6 | kW |
| Standby Modus | $P_{SB}$ | 0.014 | kW | | | | |
| Kurbelgehäuseheizungsmodus | $P_{CK}$ | 0.000 | kW | Art der Energiezufuhr | Elektrisch | | |

| | | | | | | | |
|---|---|---|---|---|---|---|---|
| **Andere Dinge** | | | | | | | |
| Kapazitätskontrolle | Variable | | | Bei Luft/Wasser-Wärmepumpen: Nennluftvolumenstrom, außen | - | 6000 | $m^3/h$ |
| Schallleistungspegel, innen/außen | $L_{WA}$ | -/68 | dB | Für Wasser- oder Sole/Wasser-Wärmepumpen: Sole- oder Wasser- Nennvolumenstrom Außenwärmetauscher | - | N/A | $m^3/h$ |
| Jährlicher Energieverbrauch | $Q_{HE}$ | 6863 | kWh | | | | |
| Für Kombiheizgeräte mit Wärmepumpe: | | | | | | | |
| **Deklariertes Lastprofil** | N/A | | | **Energieeffizienz der Warmwasserbereitung** | $\eta_{wh}$ | N/A | % |
| Täglicher Stromverbrauch | $Q_{elec}$ | N/A | kWh | Täglicher Kraftstoffverbrauch | $Q_{fuel}$ | N/A | kWh |
| Jährlicher Stromverbrauch | AEC | N/A | kWh | Jährlicher Kraftstoffverbrauch | AFC | N/A | GJ |
| Kontaktdetails | Siehe Rückseite des Handbuchs | | | | | | |

(*) Bei Raumheizgeräten mit Wärmepumpe und Kombiheizgeräten mit Wärmepumpe ist die Nennwärmeleistung Prated gleich der Auslegungslast zum Heizen Pdesignh, und die Nennwärmeleistung eines Zusatzheizgeräts Psup ist gleich der Zusatzleistung zum Heizen sup(Tj ). (**) Wenn Cdh nicht durch Messung bestimmt wird, ist der Standard-Degradationskoeffizient Cdh = 0,9.

# Technisch Parameter

| | |
|---|---|
| Modell(s): | 12kW (Heizung 3kW) ;12kW |
| Luft-Wasser-Wärmepumpe | Ja |
| Wasser-Wasser-Wärmepumpe | nien |
| Sole/Wasser Wärmepumpe | nein |
| Niedertemperatur-Wärmepumpe | nein |
| Ausgestattet mit einer Zusatzheizung | Ja(für 12kW(Heizung 3kW))nein(für 12kW) |
| Kombiheizgerät mit Wärmepumpe | nein |
| Deklarierter Klimazustand; | Wärmer |
| Parameter sind für Anwendungen bei niedrigen Temperaturen deklariert. | |

| Artikel | Symbol | Wert | Einheit | Artikel | Symbol | Wert | Einheit |
|---|---|---|---|---|---|---|---|
| **Nennwärmeleistung (*)** | Bewertet | 13 | kW | **Saisonale Raumheizungs-Energieeffizienz** | $\eta_s$ | 239 | % |
| Angegebene Heizleistung bei Teillast bei Innentemperatur 20 °C und Außentemperatur $T_j$ | | | | Angegebene Heizleistung für Teillast bei Innentemperatur 20 °C und Außentemperatur $T_j$ | | | |
| $T_j$ = – 7°C | Bewertet | N/A | kW | $T_j$= – 7°C | COPd | N/A | - |
| $T_j$ = + 2°C | Pdh | 13.3 | kW | $T_j$ = + 2°C | COPd | 3.33 | - |
| $T_j$ = +7°C | Pdh | 8.5 | kW | $T_j$= +7°C | COPd | 5.19 | - |
| $T_j$ = + 12°C | Pdh | 4.8 | kW | $T_j$ = + 12°C | COPd | 7.95 | - |
| $T_j$= zweiwertige Temperatur | Pdh | 8.5 | kW | $T_j$ = zweiwertige Temperatur | COPd | 5.19 | - |
| $T_j$= Betriebsgrenztemperatur | Pdh | 13.3 | kW | $T_j$ = Betriebsgrenztemperatur | COPd | 3.33 | - |
| Für Luft/Wasser-Wärmepumpen: $T_j$ = – 15 °C (wenn TOL < – 20 °C) | Pdh | N/A | kW | Für Luft/Wasser-Wärmepumpen: Tj = – 15 °C (wenn TOL < – 20 °C) | COPd | N/A | - |
| Zweiwertige Temperatur | $T_{biv}$ | 7 | °C | Für Luft/Wasser-Wärmepumpen: Betriebsgrenztemperatur | TOL | 2 | °C |
| Zyklusintervallkapazität für Heizung | $P_{cych}$ | N/A | kW | Zyklus-Intervall-Effizienz | $COP_{cyc}$ | N/A | - |
| Abbaukoeffizient (**) | $C_{dh}$ | 0.9 | kW | Betriebsgrenztemperatur Heizwasser | WTOL | 65 | °C |
| Stromverbrauch in anderen Modi als dem aktiven Modus | | | | Zusatzheizung | | | |
| Aus-Modus | $P_{OFF}$ | 0.014 | kW | | | | |
| Thermostat-Aus-Modus | $P_{TO}$ | 0.024 | kW | Nennwärmeleistung (**) | $P_{sup}$ | 0.0 | kW |
| Standby Modus | $P_{SB}$ | 0.014 | kW | | | | |
| Kurbelgehäuseheizungsmodus | $P_{CK}$ | 0.000 | kW | Art der Energiezufuhr | Elektrisch | | |

| | | | | | | | |
|---|---|---|---|---|---|---|---|
| **Andere Dinge** | | | | | | | |
| Kapazitätskontrolle | Variable | | | Bei Luft/Wasser-Wärmepumpen: Nennluftvolumenstrom, außen | - | 6000 | $m^3/h$ |
| Schallleistungspegel, innen/außen | $L_{WA}$ | -/68 | dB | Für Wasser- oder Sole/Wasser-Wärmepumpen: Sole- oder Wasser- Nennvolumenstrom Außenwärmetauscher | - | N/A | $m^3/h$ |
| Jährlicher Energieverbrauch | $Q_{HE}$ | 2934 | kWh | | | | |
| Für Kombiheizgeräte mit Wärmepumpe: | | | | | | | |
| **Deklariertes Lastprofil** | N/A | | | **Energieeffizienz der Warmwasserbereitung** | $\eta_{wh}$ | N/A | % |
| Täglicher Stromverbrauch | $Q_{elec}$ | N/A | kWh | Täglicher Kraftstoffverbrauch | $Q_{fuel}$ | N/A | kWh |
| Jährlicher Stromverbrauch | AEC | N/A | kWh | Jährlicher Kraftstoffverbrauch | AFC | N/A | GJ |
| Kontaktdetails | Siehe Rückseite des Handbuchs | | | | | | |

(*) Bei Raumheizgeräten mit Wärmepumpe und Kombiheizgeräten mit Wärmepumpe ist die Nennwärmeleistung Prated gleich der Auslegungslast zum Heizen Pdesignh, und die Nennwärmeleistung eines Zusatzheizgeräts Psup ist gleich der Zusatzleistung zum Heizen sup(Tj ). (**) Wenn Cdh nicht durch Messung bestimmt wird, ist der Standard-Degradationskoeffizient Cdh = 0,9.

# Technisch Parameter

| | |
|---|---|
| Modell(s): | 16kW (Heizung 3kW) ;16kW |
| Luft-Wasser-Wärmepumpe | Ja |
| Wasser-Wasser-Wärmepumpe | nien |
| Sole/Wasser Wärmepumpe | nein |
| Niedertemperatur-Wärmepumpe | nein |
| Ausgestattet mit einer Zusatzheizung | Ja(für 16kW(Heizung 3kW))nein(für 16kW) |
| Kombiheizgerät mit Wärmepumpe | nein |
| Deklarierter Klimazustand; | Kälter |
| PParameter sind für Anwendungen bei niedrigen Temperaturen deklariert. | |

| Artikel | Symbol | Wert | Einheit | Artikel | Symbol | Wert | Einheit |
|---|---|---|---|---|---|---|---|
| **Nennwärmeleistung (*)** | Bewertet | 14 | kW | **Saisonale Raumheizungs-Energieeffizienz** | $\eta_s$ | 156 | % |
| Angegebene Heizleistung bei Teillast bei Innentemperatur 20 °C und Außentemperatur $T_j$ | | | | Angegebene Heizleistung für Teillast bei Innentemperatur 20 °C und Außentemperatur $T_j$ | | | |
| $T_j$ = – 7°C | Bewertet | 9.1 | kW | $T_j$= – 7°C | COPd | 3.30 | - |
| $T_j$ = + 2°C | Pdh | 5.0 | kW | $T_j$ = + 2°C | COPd | 4.87 | - |
| $T_j$ = +7°C | Pdh | 4.2 | kW | $T_j$= +7°C | COPd | 6.50 | - |
| $T_j$ = + 12°C | Pdh | 3.7 | kW | $T_j$ = + 12°C | COPd | 7.59 | - |
| $T_j$= zweiwertige Temperatur | Pdh | 11.3 | kW | $T_j$ = zweiwertige Temperatur | COPd | 2.28 | - |
| $T_j$= Betriebsgrenztemperatur | Pdh | 9.8 | kW | $T_j$ = Betriebsgrenztemperatur | COPd | 1.89 | - |
| Für Luft/Wasser-Wärmepumpen: $T_j$ = – 15 °C (wenn TOL < – 20 °C) | Pdh | N/A | kW | Für Luft/Wasser-Wärmepumpen: Tj = – 15 °C (wenn TOL < – 20 °C) | COPd | N/A | - |
| Zweiwertige Temperatur | $T_{biv}$ | -15 | °C | Für Luft/Wasser-Wärmepumpen: Betriebsgrenztemperatur | TOL | -22 | °C |
| Zyklusintervallkapazität für Heizung | $P_{cych}$ | N/A | kW | Zyklus-Intervall-Effizienz | $COP_{cyc}$ | N/A | - |
| Abbaukoeffizient (**) | $C_{dh}$ | 0.9 | kW | Betriebsgrenztemperatur Heizwasser | WTOL | 65 | °C |
| Stromverbrauch in anderen Modi als dem aktiven Modus | | | | Zusatzheizung | | | |
| Aus-Modus | $P_{OFF}$ | 0.014 | kW | | | | |
| Thermostat-Aus-Modus | $P_{TO}$ | 0.024 | kW | Nennwärmeleistung (**) | $P_{sup}$ | 4.2 | kW |
| Standby Modus | $P_{SB}$ | 0.014 | kW | | | | |
| Kurbelgehäuseheizungsmodus | $P_{CK}$ | 0.000 | kW | Art der Energiezufuhr | Elektrisch | | |

| | | | | | | | |
|---|---|---|---|---|---|---|---|
| **Andere Dinge** | | | | | | | |
| Kapazitätskontrolle | Variable | | | Bei Luft/Wasser-Wärmepumpen: Nennluftvolumenstrom, außen | - | 6000 | $m^3/h$ |
| Schallleistungspegel, innen/außen | $L_{WA}$ | -/68 | dB | Für Wasser- oder Sole/Wasser-Wärmepumpen: Sole- oder Wasser- Nennvolumenstrom Außenwärmetauscher | - | N/A | $m^3/h$ |
| Jährlicher Energieverbrauch | $Q_{HE}$ | 8618 | kWh | | | | |
| Für Kombiheizgeräte mit Wärmepumpe: | | | | | | | |
| **Deklariertes Lastprofil** | N/A | | | **Energieeffizienz der Warmwasserbereitung** | $\eta_{wh}$ | N/A | % |
| Täglicher Stromverbrauch | $Q_{elec}$ | N/A | kWh | Täglicher Kraftstoffverbrauch | $Q_{fuel}$ | N/A | kWh |
| Jährlicher Stromverbrauch | AEC | N/A | kWh | Jährlicher Kraftstoffverbrauch | AFC | N/A | GJ |
| Kontaktdetails | Siehe Rückseite des Handbuchs | | | | | | |

(*) Bei Raumheizgeräten mit Wärmepumpe und Kombiheizgeräten mit Wärmepumpe ist die Nennwärmeleistung Prated gleich der Auslegungslast zum Heizen Pdesignh, und die Nennwärmeleistung eines Zusatzheizgeräts Psup ist gleich der Zusatzleistung zum Heizen sup(Tj ). (**) Wenn Cdh nicht durch Messung bestimmt wird, ist der Standard-Degradationskoeffizient Cdh = 0,9.

# Technisch Parameter

| | |
|---|---|
| Modell(s): | 16kW (Heizung 3kW) ;16kW |
| Luft-Wasser-Wärmepumpe | Ja |
| Wasser-Wasser-Wärmepumpe | nien |
| Sole/Wasser Wärmepumpe | nein |
| Niedertemperatur-Wärmepumpe | nein |
| Ausgestattet mit einer Zusatzheizung | Ja(für 16kW(Heizung 3kW))nein(für 16kW) |
| Kombiheizgerät mit Wärmepumpe | nein |
| Deklarierter Klimazustand; | Durchschnitt |
| Parameter werden für die Anwendung bei mittlerer Temperatur deklariert. | |

| Artikel | Symbol | Wert | Einheit | Artikel | Symbol | Wert | Einheit |
|---|---|---|---|---|---|---|---|
| **Nennwärmeleistung (*)** | Bewertet | 13 | kW | **Saisonale Raumheizungs-Energieeffizienz** | $\eta_s$ | 136 | % |
| Angegebene Heizleistung bei Teillast bei Innentemperatur 20 °C und Außentemperatur $T_j$ | | | | Angegebene Heizleistung für Teillast bei Innentemperatur 20 °C und Außentemperatur $T_j$ | | | |
| $T_j$ = – 7°C | Bewertet | 11.3 | kW | $T_j$= – 7°C | COPd | 2.04 | - |
| $T_j$ = + 2°C | Pdh | 7.3 | kW | $T_j$ = + 2°C | COPd | 3.31 | - |
| $T_j$ = +7°C | Pdh | 4.8 | kW | $T_j$= +7°C | COPd | 4.81 | - |
| $T_j$ = + 12°C | Pdh | 4.0 | kW | $T_j$ = + 12°C | COPd | 7.35 | - |
| $T_j$= zweiwertige Temperatur | Pdh | 11.3 | kW | $T_j$ = zweiwertige Temperatur | COPd | 2.04 | - |
| $T_j$= Betriebsgrenztemperatur | Pdh | 11.2 | kW | $T_j$ = Betriebsgrenztemperatur | COPd | 1.72 | - |
| Für Luft/Wasser-Wärmepumpen: $T_j$ = – 15 °C (wenn TOL < – 20 °C) | Pdh | N/A | kW | Für Luft/Wasser-Wärmepumpen: Tj = – 15 °C (wenn TOL < – 20 °C) | COPd | N/A | - |
| Zweiwertige Temperatur | $T_{biv}$ | -7 | °C | Für Luft/Wasser-Wärmepumpen: Betriebsgrenztemperatur | TOL | -10 | °C |
| Zyklusintervallkapazität für Heizung | $P_{cych}$ | N/A | kW | Zyklus-Intervall-Effizienz | $COP_{cyc}$ | N/A | - |
| Abbaukoeffizient (**) | $C_{dh}$ | 0.9 | kW | Betriebsgrenztemperatur Heizwasser | WTOL | 65 | °C |
| Stromverbrauch in anderen Modi als dem aktiven Modus | | | | Zusatzheizung | | | |
| Aus-Modus | $P_{OFF}$ | 0.014 | kW | | | | |
| Thermostat-Aus-Modus | $P_{TO}$ | 0.024 | kW | Nennwärmeleistung (**) | $P_{sup}$ | 1.8 | kW |
| Standby Modus | $P_{SB}$ | 0.014 | kW | | | | |
| Kurbelgehäuseheizungsmodus | $P_{CK}$ | 0.000 | kW | Art der Energiezufuhr | Elektrisch | | |

| | | | | | | | |
|---|---|---|---|---|---|---|---|
| **Andere Dinge** | | | | | | | |
| Kapazitätskontrolle | Variable | | | Bei Luft/Wasser-Wärmepumpen: Nennluftvolumenstrom, außen | - | 6000 | $m^3/h$ |
| Schallleistungspegel, innen/außen | $L_{WA}$ | -/68 | dB | Für Wasser- oder Sole/Wasser-Wärmepumpen: Sole- oder Wasser- Nennvolumenstrom Außenwärmetauscher | - | N/A | $m^3/h$ |
| Jährlicher Energieverbrauch | $Q_{HE}$ | 7593 | kWh | | | | |
| Für Kombiheizgeräte mit Wärmepumpe: | | | | | | | |
| **Deklariertes Lastprofil** | N/A | | | **Energieeffizienz der Warmwasserbereitung** | $\eta_{wh}$ | N/A | % |
| Täglicher Stromverbrauch | $Q_{elec}$ | N/A | kWh | Täglicher Kraftstoffverbrauch | $Q_{fuel}$ | N/A | kWh |
| Jährlicher Stromverbrauch | AEC | N/A | kWh | Jährlicher Kraftstoffverbrauch | AFC | N/A | GJ |
| Kontaktdetails | Siehe Rückseite des Handbuchs | | | | | | |

(*) Bei Raumheizgeräten mit Wärmepumpe und Kombiheizgeräten mit Wärmepumpe ist die Nennwärmeleistung Prated gleich der Auslegungslast zum Heizen Pdesignh, und die Nennwärmeleistung eines Zusatzheizgeräts Psup ist gleich der Zusatzleistung zum Heizen sup(Tj ). (**) Wenn Cdh nicht durch Messung bestimmt wird, ist der Standard-Degradationskoeffizient Cdh = 0,9.

# Technisch Parameter

| | |
|---|---|
| Modell(s): | 16kW (Heizung 3kW) ;16kW |
| Luft-Wasser-Wärmepumpe | Ja |
| Wasser-Wasser-Wärmepumpe | nien |
| Sole/Wasser Wärmepumpe | nein |
| Niedertemperatur-Wärmepumpe | nein |
| Ausgestattet mit einer Zusatzheizung | Ja(für 16kW(Heizung 3kW))nein(für 16kW) |
| Kombiheizgerät mit Wärmepumpe | nein |
| Deklarierter Klimazustand; | Wärmer |
| Parameter werden für die Anwendung bei mittlerer Temperatur deklariert. | |

| Artikel | Symbol | Wert | Einheit | Artikel | Symbol | Wert | Einheit |
|---|---|---|---|---|---|---|---|
| **Nennwärmeleistung (*)** | Bewertet | 14 | kW | **Saisonale Raumheizungs-Energieeffizienz** | $\eta_s$ | 171 | % |
| Angegebene Heizleistung bei Teillast bei Innentemperatur 20 °C und Außentemperatur $T_j$ | | | | Angegebene Heizleistung für Teillast bei Innentemperatur 20 °C und Außentemperatur $T_j$ | | | |
| $T_j$ = – 7°C | Bewertet | N/A | kW | $T_j$= – 7°C | COPd | N/A | - |
| $T_j$ = + 2°C | Pdh | 13.2 | kW | $T_j$ = + 2°C | COPd | 2.30 | - |
| $T_j$ = +7°C | Pdh | 9.0 | kW | $T_j$= +7°C | COPd | 3.68 | - |
| $T_j$ = + 12°C | Pdh | 4.1 | kW | $T_j$ = + 12°C | COPd | 5.80 | - |
| $T_j$= zweiwertige Temperatur | Pdh | 9.0 | kW | $T_j$ = zweiwertige Temperatur | COPd | 3.68 | - |
| $T_j$= Betriebsgrenztemperatur | Pdh | 13.2 | kW | $T_j$ = Betriebsgrenztemperatur | COPd | 2.30 | - |
| Für Luft/Wasser-Wärmepumpen: $T_j$ = – 15 °C (wenn TOL < – 20 °C) | Pdh | N/A | kW | Für Luft/Wasser-Wärmepumpen: Tj = – 15 °C (wenn TOL < – 20 °C) | COPd | N/A | - |
| Zweiwertige Temperatur | $T_{biv}$ | 7 | °C | Für Luft/Wasser-Wärmepumpen: Betriebsgrenztemperatur | TOL | 2 | °C |
| Zyklusintervallkapazität für Heizung | $P_{cych}$ | N/A | kW | Zyklus-Intervall-Effizienz | $COP_{cyc}$ | N/A | - |
| Abbaukoeffizient (**) | $C_{dh}$ | 0.9 | kW | Betriebsgrenztemperatur Heizwasser | WTOL | 65 | °C |
| Stromverbrauch in anderen Modi als dem aktiven Modus | | | | Zusatzheizung | | | |
| Aus-Modus | $P_{OFF}$ | 0.014 | kW | | | | |
| Thermostat-Aus-Modus | $P_{TO}$ | 0.024 | kW | Nennwärmeleistung (**) | $P_{sup}$ | 0.8 | kW |
| Standby Modus | $P_{SB}$ | 0.014 | kW | | | | |
| Kurbelgehäuseheizungsmodus | $P_{CK}$ | 0.000 | kW | Art der Energiezufuhr | Elektrisch | | |

| | | | | | | | |
|---|---|---|---|---|---|---|---|
| **Andere Dinge** | | | | | | | |
| Kapazitätskontrolle | Variable | | | Bei Luft/Wasser-Wärmepumpen: Nennluftvolumenstrom, außen | - | 6000 | $m^3/h$ |
| Schallleistungspegel, innen/außen | $L_{WA}$ | -/68 | dB | Für Wasser- oder Sole/Wasser-Wärmepumpen: Sole- oder Wasser- Nennvolumenstrom Außenwärmetauscher | - | N/A | $m^3/h$ |
| Jährlicher Energieverbrauch | $Q_{HE}$ | 4329 | kWh | | | | |
| Für Kombiheizgeräte mit Wärmepumpe: | | | | | | | |
| **Deklariertes Lastprofil** | N/A | | | **Energieeffizienz der Warmwasserbereitung** | $\eta_{wh}$ | N/A | % |
| Täglicher Stromverbrauch | $Q_{elec}$ | N/A | kWh | Täglicher Kraftstoffverbrauch | $Q_{fuel}$ | N/A | kWh |
| Jährlicher Stromverbrauch | AEC | N/A | kWh | Jährlicher Kraftstoffverbrauch | AFC | N/A | GJ |
| Kontaktdetails | Siehe Rückseite des Handbuchs | | | | | | |

(*) Bei Raumheizgeräten mit Wärmepumpe und Kombiheizgeräten mit Wärmepumpe ist die Nennwärmeleistung Prated gleich der Auslegungslast zum Heizen Pdesignh, und die Nennwärmeleistung eines Zusatzheizgeräts Psup ist gleich der Zusatzleistung zum Heizen sup(Tj ). (**) Wenn Cdh nicht durch Messung bestimmt wird, ist der Standard-Degradationskoeffizient Cdh = 0,9.

# Technisch Parameter

| | |
|---|---|
| Modell(s): | 16kW (Heizung 3kW) ;16kW |
| Luft-Wasser-Wärmepumpe | Ja |
| Wasser-Wasser-Wärmepumpe | nien |
| Sole/Wasser Wärmepumpe | nein |
| Niedertemperatur-Wärmepumpe | nein |
| Ausgestattet mit einer Zusatzheizung | Ja(für 16kW(Heizung 3kW))nein(für 16kW) |
| Kombiheizgerät mit Wärmepumpe | nein |
| Deklarierter Klimazustand; | Kälter |
| Parameter werden für die Anwendung bei mittlerer Temperatur deklariert. | |

| Artikel | Symbol | Wert | Einheit | Artikel | Symbol | Wert | Einheit |
|---|---|---|---|---|---|---|---|
| **Nennwärmeleistung (*)** | Bewertet | 12 | kW | **Saisonale Raumheizungs-Energieeffizienz** | $\eta_s$ | 121 | % |
| Angegebene Heizleistung bei Teillast bei Innentemperatur 20 °C und Außentemperatur $T_j$ | | | | Angegebene Heizleistung für Teillast bei Innentemperatur 20 °C und Außentemperatur $T_j$ | | | |
| $T_j$ = – 7°C | Bewertet | 7.7 | kW | $T_j$= – 7°C | COPd | 2.61 | - |
| $T_j$ = + 2°C | Pdh | 4.5 | kW | $T_j$ = + 2°C | COPd | 3.78 | - |
| $T_j$ = +7°C | Pdh | 3.2 | kW | $T_j$= +7°C | COPd | 4.87 | - |
| $T_j$ = + 12°C | Pdh | 3.6 | kW | $T_j$ = + 12°C | COPd | 6.39 | - |
| $T_j$= zweiwertige Temperatur | Pdh | 9.6 | kW | $T_j$ = zweiwertige Temperatur | COPd | 1.84 | - |
| $T_j$= Betriebsgrenztemperatur | Pdh | 5.1 | kW | $T_j$ = Betriebsgrenztemperatur | COPd | 1.04 | - |
| Für Luft/Wasser-Wärmepumpen: $T_j$ = – 15 °C (wenn TOL < – 20 °C) | Pdh | N/A | kW | Für Luft/Wasser-Wärmepumpen: Tj = – 15 °C (wenn TOL < – 20 °C) | COPd | N/A | - |
| Zweiwertige Temperatur | $T_{biv}$ | -15 | °C | Für Luft/Wasser-Wärmepumpen: Betriebsgrenztemperatur | TOL | -22 | °C |
| Zyklusintervallkapazität für Heizung | $P_{cych}$ | N/A | kW | Zyklus-Intervall-Effizienz | $COP_{cyc}$ | N/A | - |
| Abbaukoeffizient (**) | $C_{dh}$ | 0.9 | kW | Betriebsgrenztemperatur Heizwasser | WTOL | 65 | °C |
| Stromverbrauch in anderen Modi als dem aktiven Modus | | | | Zusatzheizung | | | |
| Aus-Modus | $P_{OFF}$ | 0.014 | kW | | | | |
| Thermostat-Aus-Modus | $P_{TO}$ | 0.024 | kW | Nennwärmeleistung (**) | $P_{sup}$ | 6.9 | kW |
| Standby Modus | $P_{SB}$ | 0.014 | kW | | | | |
| Kurbelgehäuseheizungsmodus | $P_{CK}$ | 0.000 | kW | Art der Energiezufuhr | Elektrisch | | |

| | | | | | | | |
|---|---|---|---|---|---|---|---|
| **Andere Dinge** | | | | | | | |
| Kapazitätskontrolle | Variable | | | Bei Luft/Wasser-Wärmepumpen: Nennluftvolumenstrom, außen | - | 6000 | $m^3/h$ |
| Schallleistungspegel, innen/außen | $L_{WA}$ | -/68 | dB | Für Wasser- oder Sole/Wasser-Wärmepumpen: Sole- oder Wasser- Nennvolumenstrom Außenwärmetauscher | - | N/A | $m^3/h$ |
| Jährlicher Energieverbrauch | $Q_{HE}$ | 9389 | kWh | | | | |
| Für Kombiheizgeräte mit Wärmepumpe: | | | | | | | |
| **Deklariertes Lastprofil** | N/A | | | **Energieeffizienz der Warmwasserbereitung** | $\eta_{wh}$ | N/A | % |
| Täglicher Stromverbrauch | $Q_{elec}$ | N/A | kWh | Täglicher Kraftstoffverbrauch | $Q_{fuel}$ | N/A | kWh |
| Jährlicher Stromverbrauch | AEC | N/A | kWh | Jährlicher Kraftstoffverbrauch | AFC | N/A | GJ |
| Kontaktdetails | Siehe Rückseite des Handbuchs | | | | | | |

(*) Bei Raumheizgeräten mit Wärmepumpe und Kombiheizgeräten mit Wärmepumpe ist die Nennwärmeleistung Prated gleich der Auslegungslast zum Heizen Pdesignh, und die Nennwärmeleistung eines Zusatzheizgeräts Psup ist gleich der Zusatzleistung zum Heizen sup(Tj ). (**) Wenn Cdh nicht durch Messung bestimmt wird, ist der Standard-Degradationskoeffizient Cdh = 0,9.

# Technisch Parameter

| | |
|---|---|
| Modell(s): | 3-PH 12kW(Heizung 9kW);3-PH 12kW(Heizung 6kW); 3-PH 12kW(Heizung 3kW);3-PH 12kW |
| Luft-Wasser-Wärmepumpe | Ja |
| Wasser-Wasser-Wärmepumpe | nien |
| Sole/Wasser Wärmepumpe | nein |
| Niedertemperatur-Wärmepumpe | nein |
| Ausgestattet mit einer Zusatzheizung | ja(für 3-PH 12kW (Heizung 9kW); 3-PH 12kW (Heizung 6kW); 3-PH 12kW(Heizung 3kW))nein(für 3-PH 12kW) |
| Kombiheizgerät mit Wärmepumpe | nein |
| Deklarierter Klimazustand; | Durchschnitt |
| Parameter sind für Anwendungen bei niedrigen Temperaturen deklariert. | |

| Artikel | Symbol | Wert | Einheit | Artikel | Symbol | Wert | Einheit |
|---|---|---|---|---|---|---|---|
| **Nennwärmeleistung (*)** | Bewertet | 12 | kW | **Saisonale Raumheizungs-Energieeffizienz** | $\eta_s$ | 187 | % |
| Angegebene Heizleistung bei Teillast bei Innentemperatur 20 °C und Außentemperatur $T_j$ | | | | Angegebene Heizleistung für Teillast bei Innentemperatur 20 °C und Außentemperatur $T_j$ | | | |
| $T_j$ = – 7°C | Bewertet | 10.7 | kW | $T_j$= – 7°C | COPd | 2.90 | - |
| $T_j$ = + 2°C | Pdh | 7.0 | kW | $T_j$ = + 2°C | COPd | 4.53 | - |
| $T_j$ = +7°C | Pdh | 4.6 | kW | $T_j$= +7°C | COPd | 6.65 | - |
| $T_j$ = + 12°C | $P_{dh}$ | 4.2 | kW | $T_j$ = + 12°C | COPd | 8.92 | - |
| $T_j$= zweiwertige Temperatur | $P_{dh}$ | 10.7 | kW | $T_j$ = zweiwertige Temperatur | COPd | 2.90 | - |
| $T_j$= Betriebsgrenztemperatur | $P_{dh}$ | 11.4 | kW | $T_j$ = Betriebsgrenztemperatur | COPd | 2.63 | - |
| Für Luft/Wasser-Wärmepumpen: $T_j$ = – 15 °C (wenn TOL < – 20 °C) | Pdh | N/A | kW | Für Luft/Wasser-Wärmepumpen: Tj = – 15 °C (wenn TOL < – 20 °C) | COPd | N/A | - |
| Zweiwertige Temperatur | $T_{biv}$ | -7 | °C | Für Luft/Wasser-Wärmepumpen: Betriebsgrenztemperatur | TOL | -10 | °C |
| Zyklusintervallkapazität für Heizung | $P_{cych}$ | N/A | kW | Zyklus-Intervall-Effizienz | $COP_{cyc}$ | N/A | - |
| Abbaukoeffizient (**) | $C_{dh}$ | 0.9 | kW | Betriebsgrenztemperatur Heizwasser | WTOL | 65 | °C |
| Stromverbrauch in anderen Modi als dem aktiven Modus | | | | Zusatzheizung | | | |
| Aus-Modus | $P_{OFF}$ | 0.014 | kW | | | | |
| Thermostat-Aus-Modus | $P_{TO}$ | 0.024 | kW | Nennwärmeleistung (**) | $P_{sup}$ | 0.6 | kW |
| Standby Modus | $P_{SB}$ | 0.014 | kW | | | | |
| Kurbelgehäuseheizungsmodus | $P_{CK}$ | 0.000 | kW | Art der Energiezufuhr | Elektrisch | | |

| | | | | | | | |
|---|---|---|---|---|---|---|---|
| **Andere Dinge** | | | | | | | |
| Kapazitätskontrolle | Variable | | | Bei Luft/Wasser-Wärmepumpen: Nennluftvolumenstrom, außen | - | 5000 | $m^3/h$ |
| Schallleistungspegel, innen/außen | $L_{WA}$ | -/64 | dB | Für Wasser- oder Sole/Wasser-Wärmepumpen: Sole- oder Wasser- Nennvolumenstrom Außenwärmetauscher | - | N/A | $m^3/h$ |
| Jährlicher Energieverbrauch | $Q_{HE}$ | 5256 | kWh | | | | |
| Für Kombiheizgeräte mit Wärmepumpe: | | | | | | | |
| **Deklariertes Lastprofil** | N/A | | | **Energieeffizienz der Warmwasserbereitung** | $\eta_{wh}$ | N/A | % |
| Täglicher Stromverbrauch | $Q_{elec}$ | N/A | kWh | Täglicher Kraftstoffverbrauch | $Q_{fuel}$ | N/A | kWh |
| Jährlicher Stromverbrauch | AEC | N/A | kWh | Jährlicher Kraftstoffverbrauch | AFC | N/A | GJ |
| Kontaktdetails | Siehe Rückseite des Handbuchs | | | | | | |

(*) Bei Raumheizgeräten mit Wärmepumpe und Kombiheizgeräten mit Wärmepumpe ist die Nennwärmeleistung Prated gleich der Auslegungslast zum Heizen Pdesignh, und die Nennwärmeleistung eines Zusatzheizgeräts Psup ist gleich der Zusatzleistung zum Heizen sup(Tj ). (**) Wenn Cdh nicht durch Messung bestimmt wird, ist der Standard-Degradationskoeffizient Cdh = 0,9.

# Technisch Parameter

| | |
|---|---|
| Modell(s): | 3-PH 12kW(Heizung 9kW);3-PH 12kW(Heizung 6kW); 3-PH 12kW(Heizung 3kW);3-PH 12kW |
| Luft-Wasser-Wärmepumpe | Ja |
| Wasser-Wasser-Wärmepumpe | nien |
| Sole/Wasser Wärmepumpe | nein |
| Niedertemperatur-Wärmepumpe | nein |
| Ausgestattet mit einer Zusatzheizung | ja(für 3-PH 12kW (Heizung 9kW); 3-PH 12kW (Heizung 6kW); 3-PH 12kW(Heizung 3kW))nein(für 3-PH 12kW) |
| Kombiheizgerät mit Wärmepumpe | nein |
| Deklarierter Klimazustand; | Wärmer |
| Parameter sind für Anwendungen bei niedrigen Temperaturen deklariert. | |

| Artikel | Symbol | Wert | Einheit | Artikel | Symbol | Wert | Einheit |
|---|---|---|---|---|---|---|---|
| **Nennwärmeleistung (*)** | Bewertet | 11 | kW | **Saisonale Raumheizungs-Energieeffizienz** | $\eta_s$ | 253 | % |
| Angegebene Heizleistung bei Teillast bei Innentemperatur 20 °C und Außentemperatur $T_j$ | | | | Angegebene Heizleistung für Teillast bei Innentemperatur 20 °C und Außentemperatur $T_j$ | | | |
| $T_j$ = – 7°C | Bewertet | N/A | kW | $T_j$= – 7°C | COPd | N/A | - |
| $T_j$ = + 2°C | Pdh | 11.1 | kW | $T_j$ = + 2°C | COPd | 3.62 | - |
| $T_j$ = +7°C | Pdh | 7.2 | kW | $T_j$= +7°C | COPd | 5.64 | - |
| $T_j$ = + 12°C | $P_{dh}$ | 4.7 | kW | $T_j$ = + 12°C | COPd | 8.34 | - |
| $T_j$= zweiwertige Temperatur | $P_{dh}$ | 7.2 | kW | $T_j$ = zweiwertige Temperatur | COPd | 5.64 | - |
| $T_j$= Betriebsgrenztemperatur | $P_{dh}$ | 11.1 | kW | $T_j$ = Betriebsgrenztemperatur | COPd | 3.62 | - |
| Für Luft/Wasser-Wärmepumpen: $T_j$ = – 15 °C (wenn TOL < – 20 °C) | Pdh | N/A | kW | Für Luft/Wasser-Wärmepumpen: Tj = – 15 °C (wenn TOL < – 20 °C) | COPd | N/A | - |
| Zweiwertige Temperatur | $T_{biv}$ | 7 | °C | Für Luft/Wasser-Wärmepumpen: Betriebsgrenztemperatur | TOL | 2 | °C |
| Zyklusintervallkapazität für Heizung | $P_{cych}$ | N/A | kW | Zyklus-Intervall-Effizienz | $COP_{cyc}$ | N/A | - |
| Abbaukoeffizient (**) | $C_{dh}$ | 0.9 | kW | Betriebsgrenztemperatur Heizwasser | WTOL | 65 | °C |
| Stromverbrauch in anderen Modi als dem aktiven Modus | | | | Zusatzheizung | | | |
| Aus-Modus | $P_{OFF}$ | 0.014 | kW | | | | |
| Thermostat-Aus-Modus | $P_{TO}$ | 0.024 | kW | Nennwärmeleistung (**) | $P_{sup}$ | 0.6 | kW |
| Standby Modus | $P_{SB}$ | 0.014 | kW | | | | |
| Kurbelgehäuseheizungsmodus | $P_{CK}$ | 0.000 | kW | Art der Energiezufuhr | Elektrisch | | |

| | | | | | | | |
|---|---|---|---|---|---|---|---|
| **Andere Dinge** | | | | | | | |
| Kapazitätskontrolle | Variable | | | Bei Luft/Wasser-Wärmepumpen: Nennluftvolumenstrom, außen | - | 5000 | $m^3/h$ |
| Schallleistungspegel, innen/außen | $L_{WA}$ | -/64 | dB | Für Wasser- oder Sole/Wasser-Wärmepumpen: Sole- oder Wasser- Nennvolumenstrom Außenwärmetauscher | - | N/A | $m^3/h$ |
| Jährlicher Energieverbrauch | $Q_{HE}$ | 2325 | kWh | | | | |
| Für Kombiheizgeräte mit Wärmepumpe: | | | | | | | |
| **Deklariertes Lastprofil** | N/A | | | **Energieeffizienz der Warmwasserbereitung** | $\eta_{wh}$ | N/A | % |
| Täglicher Stromverbrauch | $Q_{elec}$ | N/A | kWh | Täglicher Kraftstoffverbrauch | $Q_{fuel}$ | N/A | kWh |
| Jährlicher Stromverbrauch | AEC | N/A | kWh | Jährlicher Kraftstoffverbrauch | AFC | N/A | GJ |
| Kontaktdetails | Siehe Rückseite des Handbuchs | | | | | | |

(*) Bei Raumheizgeräten mit Wärmepumpe und Kombiheizgeräten mit Wärmepumpe ist die Nennwärmeleistung Prated gleich der Auslegungslast zum Heizen Pdesignh, und die Nennwärmeleistung eines Zusatzheizgeräts Psup ist gleich der Zusatzleistung zum Heizen sup(Tj ). (**) Wenn Cdh nicht durch Messung bestimmt wird, ist der Standard-Degradationskoeffizient Cdh = 0,9.

# Technisch Parameter

| | |
|---|---|
| Modell(s): | 3-PH 12kW(Heizung 9kW);3-PH 12kW(Heizung 6kW); 3-PH 12kW(Heizung 3kW);3-PH 12kW |
| Luft-Wasser-Wärmepumpe | Ja |
| Wasser-Wasser-Wärmepumpe | nien |
| Sole/Wasser Wärmepumpe | nein |
| Niedertemperatur-Wärmepumpe | nein |
| Ausgestattet mit einer Zusatzheizung | ja(für 3-PH 12kW (Heizung 9kW); 3-PH 12kW (Heizung 6kW); 3-PH 12kW(Heizung 3kW))nein(für 3-PH 12kW) |
| Kombiheizgerät mit Wärmepumpe | nein |
| Deklarierter Klimazustand; | Kälter |
| Parameter sind für Anwendungen bei niedrigen Temperaturen deklariert. | |

| Artikel | Symbol | Wert | Einheit | Artikel | Symbol | Wert | Einheit |
|---|---|---|---|---|---|---|---|
| **Nennwärmeleistung (*)** | Bewertet | 11 | kW | **Saisonale Raumheizungs-Energieeffizienz** | $\eta_s$ | 163 | % |
| Angegebene Heizleistung bei Teillast bei Innentemperatur 20 °C und Außentemperatur $T_j$ | | | | Angegebene Heizleistung für Teillast bei Innentemperatur 20 °C und Außentemperatur $T_j$ | | | |
| $T_j$ = – 7°C | Bewertet | 7.2 | kW | $T_j$= – 7°C | COPd | 3.51 | - |
| $T_j$ = + 2°C | Pdh | 4.2 | kW | $T_j$ = + 2°C | COPd | 5.06 | - |
| $T_j$ = +7°C | Pdh | 3.2 | kW | $T_j$= +7°C | COPd | 6.20 | - |
| $T_j$ = + 12°C | $P_{dh}$ | 3.6 | kW | $T_j$ = + 12°C | COPd | 8.19 | - |
| $T_j$= zweiwertige Temperatur | $P_{dh}$ | 9.3 | kW | $T_j$ = zweiwertige Temperatur | COPd | 2.59 | - |
| $T_j$= Betriebsgrenztemperatur | $P_{dh}$ | 7.1 | kW | $T_j$ = Betriebsgrenztemperatur | COPd | 2.08 | - |
| Für Luft/Wasser-Wärmepumpen: $T_j$ = – 15 °C (wenn TOL < – 20 °C) | Pdh | N/A | kW | Für Luft/Wasser-Wärmepumpen: Tj = – 15 °C (wenn TOL < – 20 °C) | COPd | N/A | - |
| Zweiwertige Temperatur | $T_{biv}$ | -15 | °C | Für Luft/Wasser-Wärmepumpen: Betriebsgrenztemperatur | TOL | -22 | °C |
| Zyklusintervallkapazität für Heizung | $P_{cych}$ | N/A | kW | Zyklus-Intervall-Effizienz | $COP_{cyc}$ | N/A | - |
| Abbaukoeffizient (**) | $C_{dh}$ | 0.9 | kW | Betriebsgrenztemperatur Heizwasser | WTOL | 65 | °C |
| Stromverbrauch in anderen Modi als dem aktiven Modus | | | | Zusatzheizung | | | |
| Aus-Modus | $P_{OFF}$ | 0.014 | kW | | | | |
| Thermostat-Aus-Modus | $P_{TO}$ | 0.024 | kW | Nennwärmeleistung (**) | $P_{sup}$ | 3.9 | kW |
| Standby Modus | $P_{SB}$ | 0.014 | kW | | | | |
| Kurbelgehäuseheizungsmodus | $P_{CK}$ | 0.000 | kW | Art der Energiezufuhr | Elektrisch | | |

| | | | | | | | |
|---|---|---|---|---|---|---|---|
| **Andere Dinge** | | | | | | | |
| Kapazitätskontrolle | Variable | | | Bei Luft/Wasser-Wärmepumpen: Nennluftvolumenstrom, außen | - | 5000 | $m^3/h$ |
| Schallleistungspegel, innen/außen | $L_{WA}$ | -/64 | dB | Für Wasser- oder Sole/Wasser-Wärmepumpen: Sole- oder Wasser- Nennvolumenstrom Außenwärmetauscher | - | N/A | $m^3/h$ |
| Jährlicher Energieverbrauch | $Q_{HE}$ | 6736 | kWh | | | | |
| Für Kombiheizgeräte mit Wärmepumpe: | | | | | | | |
| **Deklariertes Lastprofil** | N/A | | | **Energieeffizienz der Warmwasserbereitung** | $\eta_{wh}$ | N/A | % |
| Täglicher Stromverbrauch | $Q_{elec}$ | N/A | kWh | Täglicher Kraftstoffverbrauch | $Q_{fuel}$ | N/A | kWh |
| Jährlicher Stromverbrauch | AEC | N/A | kWh | Jährlicher Kraftstoffverbrauch | AFC | N/A | GJ |
| Kontaktdetails | Siehe Rückseite des Handbuchs | | | | | | |

(*) Bei Raumheizgeräten mit Wärmepumpe und Kombiheizgeräten mit Wärmepumpe ist die Nennwärmeleistung Prated gleich der Auslegungslast zum Heizen Pdesignh, und die Nennwärmeleistung eines Zusatzheizgeräts Psup ist gleich der Zusatzleistung zum Heizen sup(Tj ). (**) Wenn Cdh nicht durch Messung bestimmt wird, ist der Standard-Degradationskoeffizient Cdh = 0,9.

# Technisch Parameter

| | |
|---|---|
| Modell(s): | 3-PH 12kW(Heizung 9kW);3-PH 12kW(Heizung 6kW); 3-PH 12kW(Heizung 3kW);3-PH 12kW |
| Luft-Wasser-Wärmepumpe | Ja |
| Wasser-Wasser-Wärmepumpe | nien |
| Sole/Wasser Wärmepumpe | nein |
| Niedertemperatur-Wärmepumpe | nein |
| Ausgestattet mit einer Zusatzheizung | ja(für 3-PH 12kW (Heizung 9kW); 3-PH 12kW (Heizung 6kW); 3-PH 12kW(Heizung 3kW))nein(für 3-PH 12kW) |
| Kombiheizgerät mit Wärmepumpe | nein |
| Deklarierter Klimazustand; | Durchschnitt |
| Parameter werden für die Anwendung bei mittlerer Temperatur deklariert. | |

| Artikel | Symbol | Wert | Einheit | Artikel | Symbol | Wert | Einheit |
|---|---|---|---|---|---|---|---|
| **Nennwärmeleistung (*)** | Bewertet | 12 | kW | **Saisonale Raumheizungs-Energieeffizienz** | $\eta_s$ | 138 | % |
| Angegebene Heizleistung bei Teillast bei Innentemperatur 20 °C und Außentemperatur $T_j$ | | | | Angegebene Heizleistung für Teillast bei Innentemperatur 20 °C und Außentemperatur $T_j$ | | | |
| $T_j$ = – 7°C | Bewertet | 10.7 | kW | $T_j$= – 7°C | COPd | 2.13 | - |
| $T_j$ = + 2°C | Pdh | 6.6 | kW | $T_j$ = + 2°C | COPd | 3.33 | - |
| $T_j$ = +7°C | Pdh | 4.4 | kW | $T_j$= +7°C | COPd | 4.88 | - |
| $T_j$ = + 12°C | $P_{dh}$ | 4.0 | kW | $T_j$ = + 12°C | COPd | 7.67 | - |
| $T_j$= zweiwertige Temperatur | $P_{dh}$ | 10.7 | kW | $T_j$ = zweiwertige Temperatur | COPd | 2.13 | - |
| $T_j$= Betriebsgrenztemperatur | $P_{dh}$ | 10.0 | kW | $T_j$ = Betriebsgrenztemperatur | COPd | 1.82 | - |
| Für Luft/Wasser-Wärmepumpen: $T_j$ = – 15 °C (wenn TOL < – 20 °C) | Pdh | N/A | kW | Für Luft/Wasser-Wärmepumpen: Tj = – 15 °C (wenn TOL < – 20 °C) | COPd | N/A | - |
| Zweiwertige Temperatur | $T_{biv}$ | -7 | °C | Für Luft/Wasser-Wärmepumpen: Betriebsgrenztemperatur | TOL | -10 | °C |
| Zyklusintervallkapazität für Heizung | $P_{cych}$ | N/A | kW | Zyklus-Intervall-Effizienz | $COP_{cyc}$ | N/A | - |
| Abbaukoeffizient (**) | $C_{dh}$ | 0.9 | kW | Betriebsgrenztemperatur Heizwasser | WTOL | 65 | °C |
| Stromverbrauch in anderen Modi als dem aktiven Modus | | | | Zusatzheizung | | | |
| Aus-Modus | $P_{OFF}$ | 0.014 | kW | | | | |
| Thermostat-Aus-Modus | $P_{TO}$ | 0.024 | kW | Nennwärmeleistung (**) | $P_{sup}$ | 2.0 | kW |
| Standby Modus | $P_{SB}$ | 0.014 | kW | | | | |
| Kurbelgehäuseheizungsmodus | $P_{CK}$ | 0.000 | kW | Art der Energiezufuhr | Elektrisch | | |

| | | | | | | | |
|---|---|---|---|---|---|---|---|
| **Andere Dinge** | | | | | | | |
| Kapazitätskontrolle | Variable | | | Bei Luft/Wasser-Wärmepumpen: Nennluftvolumenstrom, außen | - | 5000 | $m^3/h$ |
| Schallleistungspegel, innen/außen | $L_{WA}$ | -/64 | dB | Für Wasser- oder Sole/Wasser-Wärmepumpen: Sole- oder Wasser- Nennvolumenstrom Außenwärmetauscher | - | N/A | $m^3/h$ |
| Jährlicher Energieverbrauch | $Q_{HE}$ | 7085 | kWh | | | | |
| Für Kombiheizgeräte mit Wärmepumpe: | | | | | | | |
| **Deklariertes Lastprofil** | N/A | | | **Energieeffizienz der Warmwasserbereitung** | $\eta_{wh}$ | N/A | % |
| Täglicher Stromverbrauch | $Q_{elec}$ | N/A | kWh | Täglicher Kraftstoffverbrauch | $Q_{fuel}$ | N/A | kWh |
| Jährlicher Stromverbrauch | AEC | N/A | kWh | Jährlicher Kraftstoffverbrauch | AFC | N/A | GJ |
| Kontaktdetails | Siehe Rückseite des Handbuchs | | | | | | |

(*) Bei Raumheizgeräten mit Wärmepumpe und Kombiheizgeräten mit Wärmepumpe ist die Nennwärmeleistung Prated gleich der Auslegungslast zum Heizen Pdesignh, und die Nennwärmeleistung eines Zusatzheizgeräts Psup ist gleich der Zusatzleistung zum Heizen sup(Tj ). (**) Wenn Cdh nicht durch Messung bestimmt wird, ist der Standard-Degradationskoeffizient Cdh = 0,9.

# Technisch Parameter

| | |
|---|---|
| Modell(s): | 3-PH 12kW(Heizung 9kW);3-PH 12kW(Heizung 6kW); 3-PH 12kW(Heizung 3kW);3-PH 12kW |
| Luft-Wasser-Wärmepumpe | Ja |
| Wasser-Wasser-Wärmepumpe | nien |
| Sole/Wasser Wärmepumpe | nein |
| Niedertemperatur-Wärmepumpe | nein |
| Ausgestattet mit einer Zusatzheizung | ja(für 3-PH 12kW (Heizung 9kW); 3-PH 12kW (Heizung 6kW); 3-PH 12kW(Heizung 3kW))nein(für 3-PH 12kW) |
| Kombiheizgerät mit Wärmepumpe | nein |
| Deklarierter Klimazustand; | Wärmer |
| Parameter werden für die Anwendung bei mittlerer Temperatur deklariert. | |

| Artikel | Symbol | Wert | Einheit | Artikel | Symbol | Wert | Einheit |
|---|---|---|---|---|---|---|---|
| **Nennwärmeleistung (*)** | Bewertet | 12 | kW | **Saisonale Raumheizungs-Energieeffizienz** | $\eta_s$ | 175 | % |
| Angegebene Heizleistung bei Teillast bei Innentemperatur 20 °C und Außentemperatur $T_j$ | | | | Angegebene Heizleistung für Teillast bei Innentemperatur 20 °C und Außentemperatur $T_j$ | | | |
| $T_j$ = – 7°C | Bewertet | N/A | kW | $T_j$= – 7°C | COPd | N/A | - |
| $T_j$ = + 2°C | Pdh | 12.1 | kW | $T_j$ = + 2°C | COPd | 2.27 | - |
| $T_j$ = +7°C | Pdh | 8.0 | kW | $T_j$= +7°C | COPd | 3.85 | - |
| $T_j$ = + 12°C | $P_{dh}$ | 4.3 | kW | $T_j$ = + 12°C | COPd | 5.95 | - |
| $T_j$= zweiwertige Temperatur | $P_{dh}$ | 8.0 | kW | $T_j$ = zweiwertige Temperatur | COPd | 3.85 | - |
| $T_j$= Betriebsgrenztemperatur | $P_{dh}$ | 12.1 | kW | $T_j$ = Betriebsgrenztemperatur | COPd | 2.27 | - |
| Für Luft/Wasser-Wärmepumpen: $T_j$ = – 15 °C (wenn TOL < – 20 °C) | Pdh | N/A | kW | Für Luft/Wasser-Wärmepumpen: Tj = – 15 °C (wenn TOL < – 20 °C) | COPd | N/A | - |
| Zweiwertige Temperatur | $T_{biv}$ | 7 | °C | Für Luft/Wasser-Wärmepumpen: Betriebsgrenztemperatur | TOL | 2 | °C |
| Zyklusintervallkapazität für Heizung | $P_{cych}$ | N/A | kW | Zyklus-Intervall-Effizienz | $COP_{cyc}$ | N/A | - |
| Abbaukoeffizient (**) | $C_{dh}$ | 0.9 | kW | Betriebsgrenztemperatur Heizwasser | WTOL | 65 | °C |
| Stromverbrauch in anderen Modi als dem aktiven Modus | | | | Zusatzheizung | | | |
| Aus-Modus | $P_{OFF}$ | 0.014 | kW | | | | |
| Thermostat-Aus-Modus | $P_{TO}$ | 0.024 | kW | Nennwärmeleistung (**) | $P_{sup}$ | 0.0 | kW |
| Standby Modus | $P_{SB}$ | 0.014 | kW | | | | |
| Kurbelgehäuseheizungsmodus | $P_{CK}$ | 0.000 | kW | Art der Energiezufuhr | Elektrisch | | |

| | | | | | | | |
|---|---|---|---|---|---|---|---|
| **Andere Dinge** | | | | | | | |
| Kapazitätskontrolle | Variable | | | Bei Luft/Wasser-Wärmepumpen: Nennluftvolumenstrom, außen | - | 5000 | $m^3/h$ |
| Schallleistungspegel, innen/außen | $L_{WA}$ | -/64 | dB | Für Wasser- oder Sole/Wasser-Wärmepumpen: Sole- oder Wasser- Nennvolumenstrom Außenwärmetauscher | - | N/A | $m^3/h$ |
| Jährlicher Energieverbrauch | $Q_{HE}$ | 3733 | kWh | | | | |
| Für Kombiheizgeräte mit Wärmepumpe: | | | | | | | |
| **Deklariertes Lastprofil** | N/A | | | **Energieeffizienz der Warmwasserbereitung** | $\eta_{wh}$ | N/A | % |
| Täglicher Stromverbrauch | $Q_{elec}$ | N/A | kWh | Täglicher Kraftstoffverbrauch | $Q_{fuel}$ | N/A | kWh |
| Jährlicher Stromverbrauch | AEC | N/A | kWh | Jährlicher Kraftstoffverbrauch | AFC | N/A | GJ |
| Kontaktdetails | Siehe Rückseite des Handbuchs | | | | | | |

(*) Bei Raumheizgeräten mit Wärmepumpe und Kombiheizgeräten mit Wärmepumpe ist die Nennwärmeleistung Prated gleich der Auslegungslast zum Heizen Pdesignh, und die Nennwärmeleistung eines Zusatzheizgeräts Psup ist gleich der Zusatzleistung zum Heizen sup(Tj ). (**) Wenn Cdh nicht durch Messung bestimmt wird, ist der Standard-Degradationskoeffizient Cdh = 0,9.

# Technisch Parameter

| | |
|---|---|
| Modell(s): | 3-PH 12kW(Heizung 9kW);3-PH 12kW(Heizung 6kW); 3-PH 12kW(Heizung 3kW);3-PH 12kW |
| Luft-Wasser-Wärmepumpe | Ja |
| Wasser-Wasser-Wärmepumpe | nien |
| Sole/Wasser Wärmepumpe | nein |
| Niedertemperatur-Wärmepumpe | nein |
| Ausgestattet mit einer Zusatzheizung | ja(für 3-PH 12kW (Heizung 9kW); 3-PH 12kW (Heizung 6kW); 3-PH 12kW(Heizung 3kW))nein(für 3-PH 12kW) |
| Kombiheizgerät mit Wärmepumpe | nein |
| Deklarierter Klimazustand; | Kälter |
| Parameter werden für die Anwendung bei mittlerer Temperatur deklariert. | |

| Artikel | Symbol | Wert | Einheit | Artikel | Symbol | Wert | Einheit |
|---|---|---|---|---|---|---|---|
| **Nennwärmeleistung (*)** | Bewertet | 10 | kW | **Saisonale Raumheizungs-Energieeffizienz** | $\eta_s$ | 119 | % |
| Angegebene Heizleistung bei Teillast bei Innentemperatur 20 °C und Außentemperatur $T_j$ | | | | Angegebene Heizleistung für Teillast bei Innentemperatur 20 °C und Außentemperatur $T_j$ | | | |
| $T_j$ = – 7°C | Bewertet | 6.7 | kW | $T_j$= – 7°C | COPd | 2.58 | - |
| $T_j$ = + 2°C | Pdh | 4.0 | kW | $T_j$ = + 2°C | COPd | 3.68 | - |
| $T_j$ = +7°C | Pdh | 2.9 | kW | $T_j$= +7°C | COPd | 4.57 | - |
| $T_j$ = + 12°C | $P_{dh}$ | 3.3 | kW | $T_j$ = + 12°C | COPd | 6.59 | - |
| $T_j$= zweiwertige Temperatur | $P_{dh}$ | 8.5 | kW | $T_j$ = zweiwertige Temperatur | COPd | 1.89 | - |
| $T_j$= Betriebsgrenztemperatur | $P_{dh}$ | 4.7 | kW | $T_j$ = Betriebsgrenztemperatur | COPd | 1.21 | - |
| Für Luft/Wasser-Wärmepumpen: $T_j$ = – 15 °C (wenn TOL < – 20 °C) | Pdh | N/A | kW | Für Luft/Wasser-Wärmepumpen: Tj = – 15 °C (wenn TOL < – 20 °C) | COPd | N/A | - |
| Zweiwertige Temperatur | $T_{biv}$ | -15 | °C | Für Luft/Wasser-Wärmepumpen: Betriebsgrenztemperatur | TOL | -22 | °C |
| Zyklusintervallkapazität für Heizung | $P_{cych}$ | N/A | kW | Zyklus-Intervall-Effizienz | $COP_{cyc}$ | N/A | - |
| Abbaukoeffizient (**) | $C_{dh}$ | 0.9 | kW | Betriebsgrenztemperatur Heizwasser | WTOL | 65 | °C |
| Stromverbrauch in anderen Modi als dem aktiven Modus | | | | Zusatzheizung | | | |
| Aus-Modus | $P_{OFF}$ | 0.014 | kW | | | | |
| Thermostat-Aus-Modus | $P_{TO}$ | 0.024 | kW | Nennwärmeleistung (**) | $P_{sup}$ | 5.3 | kW |
| Standby Modus | $P_{SB}$ | 0.014 | kW | | | | |
| Kurbelgehäuseheizungsmodus | $P_{CK}$ | 0.000 | kW | Art der Energiezufuhr | Elektrisch | | |

| **Andere Dinge** | | | | | | | |
|---|---|---|---|---|---|---|---|
| Kapazitätskontrolle | Variable | | | Bei Luft/Wasser-Wärmepumpen: Nennluftvolumenstrom, außen | - | 5000 | $m^3/h$ |
| Schallleistungspegel, innen/außen | $L_{WA}$ | -/64 | dB | Für Wasser- oder Sole/Wasser-Wärmepumpen: Sole- oder Wasser- Nennvolumenstrom Außenwärmetauscher | - | N/A | $m^3/h$ |
| Jährlicher Energieverbrauch | $Q_{HE}$ | 8459 | kWh | | | | |
| Für Kombiheizgeräte mit Wärmepumpe: | | | | | | | |
| **Deklariertes Lastprofil** | N/A | | | **Energieeffizienz der Warmwasserbereitung** | $\eta_{wh}$ | N/A | % |
| Täglicher Stromverbrauch | $Q_{elec}$ | N/A | kWh | Täglicher Kraftstoffverbrauch | $Q_{fuel}$ | N/A | kWh |
| Jährlicher Stromverbrauch | AEC | N/A | kWh | Jährlicher Kraftstoffverbrauch | AFC | N/A | GJ |
| Kontaktdetails | Siehe Rückseite des Handbuchs | | | | | | |

(*) Bei Raumheizgeräten mit Wärmepumpe und Kombiheizgeräten mit Wärmepumpe ist die Nennwärmeleistung Prated gleich der Auslegungslast zum Heizen Pdesignh, und die Nennwärmeleistung eines Zusatzheizgeräts Psup ist gleich der Zusatzleistung zum Heizen sup(Tj ). (**) Wenn Cdh nicht durch Messung bestimmt wird, ist der Standard-Degradationskoeffizient Cdh = 0,9.

# Technisch Parameter

| | |
|---|---|
| Modell(s): | 3-PH 14kW(Heizung 9kW);3-PH 14kW(Heizung 6kW); 3-PH 14kW(Heizung 3kW);3-PH 14kW |
| Luft-Wasser-Wärmepumpe | Ja |
| Wasser-Wasser-Wärmepumpe | nien |
| Sole/Wasser Wärmepumpe | nein |
| Niedertemperatur-Wärmepumpe | nein |
| Ausgestattet mit einer Zusatzheizung | ja(für 3-PH 14kW (Heizung 9kW); 3-PH 14kW (Heizung 6kW); 3-PH 14kW(Heizung 3kW))nein(für 3-PH 14kW) |
| Kombiheizgerät mit Wärmepumpe | nein |
| Deklarierter Klimazustand; | Durchschnitt |
| Parameter sind für Anwendungen bei niedrigen Temperaturen deklariert. | |

| Artikel | Symbol | Wert | Einheit | Artikel | Symbol | Wert | Einheit |
|---|---|---|---|---|---|---|---|
| **Nennwärmeleistung (*)** | Bewertet | 14 | kW | **Saisonale Raumheizungs-Energieeffizienz** | $\eta_s$ | 182 | % |
| Angegebene Heizleistung bei Teillast bei Innentemperatur 20 °C und Außentemperatur $T_j$ | | | | Angegebene Heizleistung für Teillast bei Innentemperatur 20 °C und Außentemperatur $T_j$ | | | |
| $T_j$ = – 7°C | Bewertet | 12.4 | kW | $T_j$= – 7°C | COPd | 2.80 | - |
| $T_j$ = + 2°C | Pdh | 7.5 | kW | $T_j$ = + 2°C | COPd | 4.40 | - |
| $T_j$ = +7°C | Pdh | 5.1 | kW | $T_j$= +7°C | COPd | 6.38 | - |
| $T_j$ = + 12°C | $P_{dh}$ | 4.9 | kW | $T_j$ = + 12°C | COPd | 9.16 | - |
| $T_j$= zweiwertige Temperatur | $P_{dh}$ | 12.4 | kW | $T_j$ = zweiwertige Temperatur | COPd | 2.80 | - |
| $T_j$= Betriebsgrenztemperatur | $P_{dh}$ | 12.9 | kW | $T_j$ = Betriebsgrenztemperatur | COPd | 2.63 | - |
| Für Luft/Wasser-Wärmepumpen: $T_j$ = – 15 °C (wenn TOL < – 20 °C) | Pdh | N/A | kW | Für Luft/Wasser-Wärmepumpen: Tj = – 15 °C (wenn TOL < – 20 °C) | COPd | N/A | - |
| Zweiwertige Temperatur | $T_{biv}$ | -7 | °C | Für Luft/Wasser-Wärmepumpen: Betriebsgrenztemperatur | TOL | -10 | °C |
| Zyklusintervallkapazität für Heizung | $P_{cych}$ | N/A | kW | Zyklus-Intervall-Effizienz | $COP_{cyc}$ | N/A | - |
| Abbaukoeffizient (**) | $C_{dh}$ | 0.9 | kW | Betriebsgrenztemperatur Heizwasser | WTOL | 65 | °C |
| Stromverbrauch in anderen Modi als dem aktiven Modus | | | | Zusatzheizung | | | |
| Aus-Modus | $P_{OFF}$ | 0.014 | kW | | | | |
| Thermostat-Aus-Modus | $P_{TO}$ | 0.024 | kW | Nennwärmeleistung (**) | $P_{sup}$ | 1.1 | kW |
| Standby Modus | $P_{SB}$ | 0.014 | kW | | | | |
| Kurbelgehäuseheizungsmodus | $P_{CK}$ | 0.000 | kW | Art der Energiezufuhr | Elektrisch | | |

| **Andere Dinge** | | | | | | | |
|---|---|---|---|---|---|---|---|
| Kapazitätskontrolle | Variable | | | Bei Luft/Wasser-Wärmepumpen: Nennluftvolumenstrom, außen | - | 5500 | $m^3/h$ |
| Schallleistungspegel, innen/außen | $L_{WA}$ | -/66 | dB | Für Wasser- oder Sole/Wasser-Wärmepumpen: Sole- oder Wasser- Nennvolumenstrom Außenwärmetauscher | - | N/A | $m^3/h$ |
| Jährlicher Energieverbrauch | $Q_{HE}$ | 6237 | kWh | | | | |
| Für Kombiheizgeräte mit Wärmepumpe: | | | | | | | |
| **Deklariertes Lastprofil** | N/A | | | **Energieeffizienz der Warmwasserbereitung** | $\eta_{wh}$ | N/A | % |
| Täglicher Stromverbrauch | $Q_{elec}$ | N/A | kWh | Täglicher Kraftstoffverbrauch | $Q_{fuel}$ | N/A | kWh |
| Jährlicher Stromverbrauch | AEC | N/A | kWh | Jährlicher Kraftstoffverbrauch | AFC | N/A | GJ |
| Kontaktdetails | Siehe Rückseite des Handbuchs | | | | | | |

(*) Bei Raumheizgeräten mit Wärmepumpe und Kombiheizgeräten mit Wärmepumpe ist die Nennwärmeleistung Prated gleich der Auslegungslast zum Heizen Pdesignh, und die Nennwärmeleistung eines Zusatzheizgeräts Psup ist gleich der Zusatzleistung zum Heizen sup(Tj ). (**) Wenn Cdh nicht durch Messung bestimmt wird, ist der Standard-Degradationskoeffizient Cdh = 0,9.

# Technisch Parameter

| | |
|---|---|
| Modell(s): | 3-PH 14kW(Heizung 9kW);3-PH 14kW(Heizung 6kW); 3-PH 14kW(Heizung 3kW);3-PH 14kW |
| Luft-Wasser-Wärmepumpe | Ja |
| Wasser-Wasser-Wärmepumpe | nien |
| Sole/Wasser Wärmepumpe | nein |
| Niedertemperatur-Wärmepumpe | nein |
| Ausgestattet mit einer Zusatzheizung | ja(für 3-PH 14kW (Heizung 9kW); 3-PH 14kW (Heizung 6kW); 3-PH 14kW(Heizung 3kW))nein(für 3-PH 14kW) |
| Kombiheizgerät mit Wärmepumpe | nein |
| Deklarierter Klimazustand; | Wärmer |
| Parameter sind für Anwendungen bei niedrigen Temperaturen deklariert. | |

| Artikel | Symbol | Wert | Einheit | Artikel | Symbol | Wert | Einheit |
|---|---|---|---|---|---|---|---|
| **Nennwärmeleistung (*)** | Bewertet | 12 | kW | **Saisonale Raumheizungs-Energieeffizienz** | $\eta_s$ | 248 | % |
| Angegebene Heizleistung bei Teillast bei Innentemperatur 20 °C und Außentemperatur $T_j$ | | | | Angegebene Heizleistung für Teillast bei Innentemperatur 20 °C und Außentemperatur $T_j$ | | | |
| $T_j$ = – 7°C | Bewertet | N/A | kW | $T_j$= – 7°C | COPd | N/A | - |
| $T_j$ = + 2°C | Pdh | 12.3 | kW | $T_j$ = + 2°C | COPd | 3.41 | - |
| $T_j$ = +7°C | Pdh | 8.0 | kW | $T_j$= +7°C | COPd | 5.61 | - |
| $T_j$ = + 12°C | $P_{dh}$ | 4.2 | kW | $T_j$ = + 12°C | COPd | 7.94 | - |
| $T_j$= zweiwertige Temperatur | $P_{dh}$ | 8.0 | kW | $T_j$ = zweiwertige Temperatur | COPd | 5.61 | - |
| $T_j$= Betriebsgrenztemperatur | $P_{dh}$ | 12.3 | kW | $T_j$ = Betriebsgrenztemperatur | COPd | 3.41 | - |
| Für Luft/Wasser-Wärmepumpen: $T_j$ = – 15 °C (wenn TOL < – 20 °C) | Pdh | N/A | kW | Für Luft/Wasser-Wärmepumpen: Tj = – 15 °C (wenn TOL < – 20 °C) | COPd | N/A | - |
| Zweiwertige Temperatur | $T_{biv}$ | 7 | °C | Für Luft/Wasser-Wärmepumpen: Betriebsgrenztemperatur | TOL | 2 | °C |
| Zyklusintervallkapazität für Heizung | $P_{cych}$ | N/A | kW | Zyklus-Intervall-Effizienz | $COP_{cyc}$ | N/A | - |
| Abbaukoeffizient (**) | $C_{dh}$ | 0.9 | kW | Betriebsgrenztemperatur Heizwasser | WTOL | 65 | °C |
| Stromverbrauch in anderen Modi als dem aktiven Modus | | | | Zusatzheizung | | | |
| Aus-Modus | $P_{OFF}$ | 0.014 | kW | | | | |
| Thermostat-Aus-Modus | $P_{TO}$ | 0.024 | kW | Nennwärmeleistung (**) | $P_{sup}$ | 0.0 | kW |
| Standby Modus | $P_{SB}$ | 0.014 | kW | | | | |
| Kurbelgehäuseheizungsmodus | $P_{CK}$ | 0.000 | kW | Art der Energiezufuhr | Elektrisch | | |

| | | | | | | | |
|---|---|---|---|---|---|---|---|
| **Andere Dinge** | | | | | | | |
| Kapazitätskontrolle | Variable | | | Bei Luft/Wasser-Wärmepumpen: Nennluftvolumenstrom, außen | - | 5500 | $m^3/h$ |
| Schallleistungspegel, innen/außen | $L_{WA}$ | -/66 | dB | Für Wasser- oder Sole/Wasser-Wärmepumpen: Sole- oder Wasser- Nennvolumenstrom Außenwärmetauscher | - | N/A | $m^3/h$ |
| Jährlicher Energieverbrauch | $Q_{HE}$ | 2638 | kWh | | | | |
| Für Kombiheizgeräte mit Wärmepumpe: | | | | | | | |
| **Deklariertes Lastprofil** | N/A | | | **Energieeffizienz der Warmwasserbereitung** | $\eta_{wh}$ | N/A | % |
| Täglicher Stromverbrauch | $Q_{elec}$ | N/A | kWh | Täglicher Kraftstoffverbrauch | $Q_{fuel}$ | N/A | kWh |
| Jährlicher Stromverbrauch | AEC | N/A | kWh | Jährlicher Kraftstoffverbrauch | AFC | N/A | GJ |
| Kontaktdetails | Siehe Rückseite des Handbuchs | | | | | | |

(*) Bei Raumheizgeräten mit Wärmepumpe und Kombiheizgeräten mit Wärmepumpe ist die Nennwärmeleistung Prated gleich der Auslegungslast zum Heizen Pdesignh, und die Nennwärmeleistung eines Zusatzheizgeräts Psup ist gleich der Zusatzleistung zum Heizen sup(Tj ). (**) Wenn Cdh nicht durch Messung bestimmt wird, ist der Standard-Degradationskoeffizient Cdh = 0,9.

# Technisch Parameter

| | |
|---|---|
| Modell(s): | 3-PH 14kW(Heizung 9kW);3-PH 14kW(Heizung 6kW); 3-PH 14kW(Heizung 3kW);3-PH 14kW |
| Luft-Wasser-Wärmepumpe | Ja |
| Wasser-Wasser-Wärmepumpe | nien |
| Sole/Wasser Wärmepumpe | nein |
| Niedertemperatur-Wärmepumpe | nein |
| Ausgestattet mit einer Zusatzheizung | ja(für 3-PH 14kW (Heizung 9kW); 3-PH 14kW (Heizung 6kW); 3-PH 14kW(Heizung 3kW))nein(für 3-PH 14kW) |
| Kombiheizgerät mit Wärmepumpe | nein |
| Deklarierter Klimazustand; | Kälter |
| Parameter sind für Anwendungen bei niedrigen Temperaturen deklariert. | |

| Artikel | Symbol | Wert | Einheit | Artikel | Symbol | Wert | Einheit |
|---|---|---|---|---|---|---|---|
| **Nennwärmeleistung (*)** | Bewertet | 13 | kW | **Saisonale Raumheizungs-Energieeffizienz** | $\eta_s$ | 156 | % |
| Angegebene Heizleistung bei Teillast bei Innentemperatur 20 °C und Außentemperatur $T_j$ | | | | Angegebene Heizleistung für Teillast bei Innentemperatur 20 °C und Außentemperatur $T_j$ | | | |
| $T_j$ = – 7°C | Bewertet | 8.3 | kW | $T_j$= – 7°C | COPd | 3.36 | - |
| $T_j$ = + 2°C | Pdh | 4.7 | kW | $T_j$ = + 2°C | COPd | 4.73 | - |
| $T_j$ = +7°C | Pdh | 3.4 | kW | $T_j$= +7°C | COPd | 6.11 | - |
| $T_j$ = + 12°C | $P_{dh}$ | 3.8 | kW | $T_j$ = + 12°C | COPd | 7.98 | - |
| $T_j$= zweiwertige Temperatur | $P_{dh}$ | 10.7 | kW | $T_j$ = zweiwertige Temperatur | COPd | 2.61 | - |
| $T_j$= Betriebsgrenztemperatur | $P_{dh}$ | 7.9 | kW | $T_j$ = Betriebsgrenztemperatur | COPd | 2.10 | - |
| Für Luft/Wasser-Wärmepumpen: $T_j$ = – 15 °C (wenn TOL < – 20 °C) | Pdh | N/A | kW | Für Luft/Wasser-Wärmepumpen: Tj = – 15 °C (wenn TOL < – 20 °C) | COPd | N/A | - |
| Zweiwertige Temperatur | $T_{biv}$ | -15 | °C | Für Luft/Wasser-Wärmepumpen: Betriebsgrenztemperatur | TOL | -22 | °C |
| Zyklusintervallkapazität für Heizung | $P_{cych}$ | N/A | kW | Zyklus-Intervall-Effizienz | $COP_{cyc}$ | N/A | - |
| Abbaukoeffizient (**) | $C_{dh}$ | 0.9 | kW | Betriebsgrenztemperatur Heizwasser | WTOL | 65 | °C |
| Stromverbrauch in anderen Modi als dem aktiven Modus | | | | Zusatzheizung | | | |
| Aus-Modus | $P_{OFF}$ | 0.014 | kW | | | | |
| Thermostat-Aus-Modus | $P_{TO}$ | 0.024 | kW | Nennwärmeleistung (**) | $P_{sup}$ | 5.1 | kW |
| Standby Modus | $P_{SB}$ | 0.014 | kW | | | | |
| Kurbelgehäuseheizungsmodus | $P_{CK}$ | 0.000 | kW | Art der Energiezufuhr | Elektrisch | | |

| | | | | | | | |
|---|---|---|---|---|---|---|---|
| **Andere Dinge** | | | | | | | |
| Kapazitätskontrolle | Variable | | | Bei Luft/Wasser-Wärmepumpen: Nennluftvolumenstrom, außen | - | 5500 | $m^3/h$ |
| Schallleistungspegel, innen/außen | $L_{WA}$ | -/66 | dB | Für Wasser- oder Sole/Wasser-Wärmepumpen: Sole- oder Wasser- Nennvolumenstrom Außenwärmetauscher | - | N/A | $m^3/h$ |
| Jährlicher Energieverbrauch | $Q_{HE}$ | 8082 | kWh | | | | |
| Für Kombiheizgeräte mit Wärmepumpe: | | | | | | | |
| **Deklariertes Lastprofil** | N/A | | | **Energieeffizienz der Warmwasserbereitung** | $\eta_{wh}$ | N/A | % |
| Täglicher Stromverbrauch | $Q_{elec}$ | N/A | kWh | Täglicher Kraftstoffverbrauch | $Q_{fuel}$ | N/A | kWh |
| Jährlicher Stromverbrauch | AEC | N/A | kWh | Jährlicher Kraftstoffverbrauch | AFC | N/A | GJ |
| Kontaktdetails | Siehe Rückseite des Handbuchs | | | | | | |

(*) Bei Raumheizgeräten mit Wärmepumpe und Kombiheizgeräten mit Wärmepumpe ist die Nennwärmeleistung Prated gleich der Auslegungslast zum Heizen Pdesignh, und die Nennwärmeleistung eines Zusatzheizgeräts Psup ist gleich der Zusatzleistung zum Heizen sup(Tj ). (**) Wenn Cdh nicht durch Messung bestimmt wird, ist der Standard-Degradationskoeffizient Cdh = 0,9.

# Technisch Parameter

| | |
|---|---|
| Modell(s): | 3-PH 14kW(Heizung 9kW);3-PH 14kW(Heizung 6kW); 3-PH 14kW(Heizung 3kW);3-PH 14kW |
| Luft-Wasser-Wärmepumpe | Ja |
| Wasser-Wasser-Wärmepumpe | nien |
| Sole/Wasser Wärmepumpe | nein |
| Niedertemperatur-Wärmepumpe | nein |
| Ausgestattet mit einer Zusatzheizung | ja(für 3-PH 14kW (Heizung 9kW); 3-PH 14kW (Heizung 6kW); 3-PH 14kW(Heizung 3kW))nein(für 3-PH 14kW) |
| Kombiheizgerät mit Wärmepumpe | nein |
| Deklarierter Klimazustand; | Durchschnitt |
| Parameter werden für die Anwendung bei mittlerer Temperatur deklariert. | |

| Artikel | Symbol | Wert | Einheit | Artikel | Symbol | Wert | Einheit |
|---|---|---|---|---|---|---|---|
| **Nennwärmeleistung (*)** | Bewertet | 12 | kW | **Saisonale Raumheizungs-Energieeffizienz** | $\eta_s$ | 135 | % |
| Angegebene Heizleistung bei Teillast bei Innentemperatur 20 °C und Außentemperatur $T_j$ | | | | Angegebene Heizleistung für Teillast bei Innentemperatur 20 °C und Außentemperatur $T_j$ | | | |
| $T_j$ = – 7°C | Bewertet | 10.9 | kW | $T_j$= – 7°C | COPd | 2.03 | - |
| $T_j$ = + 2°C | Pdh | 7.1 | kW | $T_j$ = + 2°C | COPd | 3.35 | - |
| $T_j$ = +7°C | Pdh | 4.8 | kW | $T_j$= +7°C | COPd | 4.67 | - |
| $T_j$ = + 12°C | $P_{dh}$ | 4.0 | kW | $T_j$ = + 12°C | COPd | 7.27 | - |
| $T_j$= zweiwertige Temperatur | $P_{dh}$ | 10.9 | kW | $T_j$ = zweiwertige Temperatur | COPd | 2.03 | - |
| $T_j$= Betriebsgrenztemperatur | $P_{dh}$ | 10.0 | kW | $T_j$ = Betriebsgrenztemperatur | COPd | 1.79 | - |
| Für Luft/Wasser-Wärmepumpen: $T_j$ = – 15 °C (wenn TOL < – 20 °C) | Pdh | N/A | kW | Für Luft/Wasser-Wärmepumpen: Tj = – 15 °C (wenn TOL < – 20 °C) | COPd | N/A | - |
| Zweiwertige Temperatur | $T_{biv}$ | -7 | °C | Für Luft/Wasser-Wärmepumpen: Betriebsgrenztemperatur | TOL | -10 | °C |
| Zyklusintervallkapazität für Heizung | $P_{cych}$ | N/A | kW | Zyklus-Intervall-Effizienz | $COP_{cyc}$ | N/A | - |
| Abbaukoeffizient (**) | $C_{dh}$ | 0.9 | kW | Betriebsgrenztemperatur Heizwasser | WTOL | 65 | °C |
| Stromverbrauch in anderen Modi als dem aktiven Modus | | | | Zusatzheizung | | | |
| Aus-Modus | $P_{OFF}$ | 0.014 | kW | | | | |
| Thermostat-Aus-Modus | $P_{TO}$ | 0.024 | kW | Nennwärmeleistung (**) | $P_{sup}$ | 2.0 | kW |
| Standby Modus | $P_{SB}$ | 0.014 | kW | | | | |
| Kurbelgehäuseheizungsmodus | $P_{CK}$ | 0.000 | kW | Art der Energiezufuhr | Elektrisch | | |

| **Andere Dinge** | | | | | | | |
|---|---|---|---|---|---|---|---|
| Kapazitätskontrolle | Variable | | | Bei Luft/Wasser-Wärmepumpen: Nennluftvolumenstrom, außen | - | 5500 | $m^3/h$ |
| Schallleistungspegel, innen/außen | $L_{WA}$ | -/66 | dB | Für Wasser- oder Sole/Wasser-Wärmepumpen: Sole- oder Wasser- Nennvolumenstrom Außenwärmetauscher | - | N/A | $m^3/h$ |
| Jährlicher Energieverbrauch | $Q_{HE}$ | 7384 | kWh | | | | |
| Für Kombiheizgeräte mit Wärmepumpe: | | | | | | | |
| **Deklariertes Lastprofil** | N/A | | | **Energieeffizienz der Warmwasserbereitung** | $\eta_{wh}$ | N/A | % |
| Täglicher Stromverbrauch | $Q_{elec}$ | N/A | kWh | Täglicher Kraftstoffverbrauch | $Q_{fuel}$ | N/A | kWh |
| Jährlicher Stromverbrauch | AEC | N/A | kWh | Jährlicher Kraftstoffverbrauch | AFC | N/A | GJ |
| Kontaktdetails | Siehe Rückseite des Handbuchs | | | | | | |

(*) Bei Raumheizgeräten mit Wärmepumpe und Kombiheizgeräten mit Wärmepumpe ist die Nennwärmeleistung Prated gleich der Auslegungslast zum Heizen Pdesignh, und die Nennwärmeleistung eines Zusatzheizgeräts Psup ist gleich der Zusatzleistung zum Heizen sup(Tj ). (**) Wenn Cdh nicht durch Messung bestimmt wird, ist der Standard-Degradationskoeffizient Cdh = 0,9.

# Technisch Parameter

| | |
|---|---|
| Modell(s): | 3-PH 14kW(Heizung 9kW);3-PH 14kW(Heizung 6kW); 3-PH 14kW(Heizung 3kW);3-PH 14kW |
| Luft-Wasser-Wärmepumpe | Ja |
| Wasser-Wasser-Wärmepumpe | nien |
| Sole/Wasser Wärmepumpe | nein |
| Niedertemperatur-Wärmepumpe | nein |
| Ausgestattet mit einer Zusatzheizung | ja(für 3-PH 14kW (Heizung 9kW); 3-PH 14kW (Heizung 6kW); 3-PH 14kW(Heizung 3kW))nein(für 3-PH 14kW) |
| Kombiheizgerät mit Wärmepumpe | nein |
| Deklarierter Klimazustand; | Wärmer |
| Parameter werden für die Anwendung bei mittlerer Temperatur deklariert. | |

| Artikel | Symbol | Wert | Einheit | Artikel | Symbol | Wert | Einheit |
|---|---|---|---|---|---|---|---|
| **Nennwärmeleistung (*)** | Bewertet | 14 | kW | **Saisonale Raumheizungs-Energieeffizienz** | $\eta_s$ | 170 | % |
| Angegebene Heizleistung bei Teillast bei Innentemperatur 20 °C und Außentemperatur $T_j$ | | | | Angegebene Heizleistung für Teillast bei Innentemperatur 20 °C und Außentemperatur $T_j$ | | | |
| $T_j$ = – 7°C | Bewertet | N/A | kW | $T_j$= – 7°C | COPd | N/A | - |
| $T_j$ = + 2°C | Pdh | 13.1 | kW | $T_j$ = + 2°C | COPd | 2.25 | - |
| $T_j$ = +7°C | Pdh | 9.0 | kW | $T_j$= +7°C | COPd | 3.61 | - |
| $T_j$ = + 12°C | $P_{dh}$ | 4.1 | kW | $T_j$ = + 12°C | COPd | 5.94 | - |
| $T_j$= zweiwertige Temperatur | $P_{dh}$ | 9.0 | kW | $T_j$ = zweiwertige Temperatur | COPd | 3.61 | - |
| $T_j$= Betriebsgrenztemperatur | $P_{dh}$ | 13.1 | kW | $T_j$ = Betriebsgrenztemperatur | COPd | 2.25 | - |
| Für Luft/Wasser-Wärmepumpen: $T_j$ = – 15 °C (wenn TOL < – 20 °C) | Pdh | N/A | kW | Für Luft/Wasser-Wärmepumpen: Tj = – 15 °C (wenn TOL < – 20 °C) | COPd | N/A | - |
| Zweiwertige Temperatur | $T_{biv}$ | 7 | °C | Für Luft/Wasser-Wärmepumpen: Betriebsgrenztemperatur | TOL | 2 | °C |
| Zyklusintervallkapazität für Heizung | $P_{cych}$ | N/A | kW | Zyklus-Intervall-Effizienz | $COP_{cyc}$ | N/A | - |
| Abbaukoeffizient (**) | $C_{dh}$ | 0.9 | kW | Betriebsgrenztemperatur Heizwasser | WTOL | 65 | °C |
| Stromverbrauch in anderen Modi als dem aktiven Modus | | | | Zusatzheizung | | | |
| Aus-Modus | $P_{OFF}$ | 0.014 | kW | | | | |
| Thermostat-Aus-Modus | $P_{TO}$ | 0.024 | kW | Nennwärmeleistung (**) | $P_{sup}$ | 0.9 | kW |
| Standby Modus | $P_{SB}$ | 0.014 | kW | | | | |
| Kurbelgehäuseheizungsmodus | $P_{CK}$ | 0.000 | kW | Art der Energiezufuhr | Elektrisch | | |

| **Andere Dinge** | | | | | | | |
|---|---|---|---|---|---|---|---|
| Kapazitätskontrolle | Variable | | | Bei Luft/Wasser-Wärmepumpen: Nennluftvolumenstrom, außen | - | 5500 | $m^3/h$ |
| Schallleistungspegel, innen/außen | $L_{WA}$ | -/66 | dB | Für Wasser- oder Sole/Wasser-Wärmepumpen: Sole- oder Wasser- Nennvolumenstrom Außenwärmetauscher | - | N/A | $m^3/h$ |
| Jährlicher Energieverbrauch | $Q_{HE}$ | 4320 | kWh | | | | |
| Für Kombiheizgeräte mit Wärmepumpe: | | | | | | | |
| **Deklariertes Lastprofil** | N/A | | | **Energieeffizienz der Warmwasserbereitung** | $\eta_{wh}$ | N/A | % |
| Täglicher Stromverbrauch | $Q_{elec}$ | N/A | kWh | Täglicher Kraftstoffverbrauch | $Q_{fuel}$ | N/A | kWh |
| Jährlicher Stromverbrauch | AEC | N/A | kWh | Jährlicher Kraftstoffverbrauch | AFC | N/A | GJ |
| Kontaktdetails | Siehe Rückseite des Handbuchs | | | | | | |

(*) Bei Raumheizgeräten mit Wärmepumpe und Kombiheizgeräten mit Wärmepumpe ist die Nennwärmeleistung Prated gleich der Auslegungslast zum Heizen Pdesignh, und die Nennwärmeleistung eines Zusatzheizgeräts Psup ist gleich der Zusatzleistung zum Heizen sup(Tj ). (**) Wenn Cdh nicht durch Messung bestimmt wird, ist der Standard-Degradationskoeffizient Cdh = 0,9.

# Technisch Parameter

| | |
|---|---|
| Modell(s): | 3-PH 14kW(Heizung 9kW);3-PH 14kW(Heizung 6kW); 3-PH 14kW(Heizung 3kW);3-PH 14kW |
| Luft-Wasser-Wärmepumpe | Ja |
| Wasser-Wasser-Wärmepumpe | nien |
| Sole/Wasser Wärmepumpe | nein |
| Niedertemperatur-Wärmepumpe | nein |
| Ausgestattet mit einer Zusatzheizung | ja(für 3-PH 14kW (Heizung 9kW); 3-PH 14kW (Heizung 6kW); 3-PH 14kW(Heizung 3kW))nein(für 3-PH 14kW) |
| Kombiheizgerät mit Wärmepumpe | nein |
| Deklarierter Klimazustand; | Kälter |
| Parameter werden für die Anwendung bei mittlerer Temperatur deklariert. | |

| Artikel | Symbol | Wert | Einheit | Artikel | Symbol | Wert | Einheit |
|---|---|---|---|---|---|---|---|
| **Nennwärmeleistung (*)** | Bewertet | 11 | kW | **Saisonale Raumheizungs-Energieeffizienz** | $\eta_s$ | 117 | % |
| Angegebene Heizleistung bei Teillast bei Innentemperatur 20 °C und Außentemperatur $T_j$ | | | | Angegebene Heizleistung für Teillast bei Innentemperatur 20 °C und Außentemperatur $T_j$ | | | |
| $T_j$ = – 7°C | Bewertet | 7.2 | kW | $T_j$= – 7°C | COPd | 2.56 | - |
| $T_j$ = + 2°C | Pdh | 4.3 | kW | $T_j$ = + 2°C | COPd | 3.62 | - |
| $T_j$ = +7°C | Pdh | 3.1 | kW | $T_j$= +7°C | COPd | 4.77 | - |
| $T_j$ = + 12°C | $P_{dh}$ | 3.6 | kW | $T_j$ = + 12°C | COPd | 6.40 | - |
| $T_j$= zweiwertige Temperatur | $P_{dh}$ | 8.9 | kW | $T_j$ = zweiwertige Temperatur | COPd | 1.82 | - |
| $T_j$= Betriebsgrenztemperatur | $P_{dh}$ | 4.4 | kW | $T_j$ = Betriebsgrenztemperatur | COPd | 1.16 | - |
| Für Luft/Wasser-Wärmepumpen: $T_j$ = – 15 °C (wenn TOL < – 20 °C) | Pdh | N/A | kW | Für Luft/Wasser-Wärmepumpen: Tj = – 15 °C (wenn TOL < – 20 °C) | COPd | N/A | - |
| Zweiwertige Temperatur | $T_{biv}$ | -15 | °C | Für Luft/Wasser-Wärmepumpen: Betriebsgrenztemperatur | TOL | -22 | °C |
| Zyklusintervallkapazität für Heizung | $P_{cych}$ | N/A | kW | Zyklus-Intervall-Effizienz | $COP_{cyc}$ | N/A | - |
| Abbaukoeffizient (**) | $C_{dh}$ | 0.9 | kW | Betriebsgrenztemperatur Heizwasser | WTOL | 65 | °C |
| Stromverbrauch in anderen Modi als dem aktiven Modus | | | | Zusatzheizung | | | |
| Aus-Modus | $P_{OFF}$ | 0.014 | kW | | | | |
| Thermostat-Aus-Modus | $P_{TO}$ | 0.024 | kW | Nennwärmeleistung (**) | $P_{sup}$ | 6.6 | kW |
| Standby Modus | $P_{SB}$ | 0.014 | kW | | | | |
| Kurbelgehäuseheizungsmodus | $P_{CK}$ | 0.000 | kW | Art der Energiezufuhr | Elektrisch | | |

| | | | | | | | |
|---|---|---|---|---|---|---|---|
| **Andere Dinge** | | | | | | | |
| Kapazitätskontrolle | Variable | | | Bei Luft/Wasser-Wärmepumpen: Nennluftvolumenstrom, außen | - | 5500 | $m^3/h$ |
| Schallleistungspegel, innen/außen | $L_{WA}$ | -/66 | dB | Für Wasser- oder Sole/Wasser-Wärmepumpen: Sole- oder Wasser- Nennvolumenstrom Außenwärmetauscher | - | N/A | $m^3/h$ |
| Jährlicher Energieverbrauch | $Q_{HE}$ | 8967 | kWh | | | | |
| Für Kombiheizgeräte mit Wärmepumpe: | | | | | | | |
| **Deklariertes Lastprofil** | N/A | | | **Energieeffizienz der Warmwasserbereitung** | $\eta_{wh}$ | N/A | % |
| Täglicher Stromverbrauch | $Q_{elec}$ | N/A | kWh | Täglicher Kraftstoffverbrauch | $Q_{fuel}$ | N/A | kWh |
| Jährlicher Stromverbrauch | AEC | N/A | kWh | Jährlicher Kraftstoffverbrauch | AFC | N/A | GJ |
| Kontaktdetails | Siehe Rückseite des Handbuchs | | | | | | |

(*) Bei Raumheizgeräten mit Wärmepumpe und Kombiheizgeräten mit Wärmepumpe ist die Nennwärmeleistung Prated gleich der Auslegungslast zum Heizen Pdesignh, und die Nennwärmeleistung eines Zusatzheizgeräts Psup ist gleich der Zusatzleistung zum Heizen sup(Tj ). (**) Wenn Cdh nicht durch Messung bestimmt wird, ist der Standard-Degradationskoeffizient Cdh = 0,9.

# Technisch Parameter

| | |
|---|---|
| Modell(s): | 3-PH 16kW(Heizung 9kW);3-PH 16kW(Heizung 6kW); 3-PH 16kW(Heizung 3kW);3-PH 16kW |
| Luft-Wasser-Wärmepumpe | Ja |
| Wasser-Wasser-Wärmepumpe | nien |
| Sole/Wasser Wärmepumpe | nein |
| Niedertemperatur-Wärmepumpe | nein |
| Ausgestattet mit einer Zusatzheizung | ja(für 3-PH 16kW (Heizung 9kW); 3-PH 16kW (Heizung 6kW); 3-PH 16kW(Heizung 3kW))nein(für 3-PH 16kW) |
| Kombiheizgerät mit Wärmepumpe | nein |
| Deklarierter Klimazustand; | Durchschnitt |
| Parameter sind für Anwendungen bei niedrigen Temperaturen deklariert. | |

| Artikel | Symbol | Wert | Einheit | Artikel | Symbol | Wert | Einheit |
|---|---|---|---|---|---|---|---|
| **Nennwärmeleistung (*)** | Bewertet | 15 | kW | **Saisonale Raumheizungs-Energieeffizienz** | $\eta_s$ | 179 | % |
| Angegebene Heizleistung bei Teillast bei Innentemperatur 20 °C und Außentemperatur $T_j$ | | | | Angegebene Heizleistung für Teillast bei Innentemperatur 20 °C und Außentemperatur $T_j$ | | | |
| $T_j$ = – 7°C | Bewertet | 13.4 | kW | $T_j$= – 7°C | COPd | 2.60 | - |
| $T_j$ = + 2°C | Pdh | 8.0 | kW | $T_j$ = + 2°C | COPd | 4.39 | - |
| $T_j$ = +7°C | Pdh | 5.4 | kW | $T_j$= +7°C | COPd | 6.44 | - |
| $T_j$ = + 12°C | $P_{dh}$ | 4.6 | kW | $T_j$ = + 12°C | COPd | 8.92 | - |
| $T_j$= zweiwertige Temperatur | $P_{dh}$ | 13.4 | kW | $T_j$ = zweiwertige Temperatur | COPd | 2.60 | - |
| $T_j$= Betriebsgrenztemperatur | $P_{dh}$ | 13.4 | kW | $T_j$ = Betriebsgrenztemperatur | COPd | 2.44 | - |
| Für Luft/Wasser-Wärmepumpen: $T_j$ = – 15 °C (wenn TOL < – 20 °C) | Pdh | N/A | kW | Für Luft/Wasser-Wärmepumpen: Tj = – 15 °C (wenn TOL < – 20 °C) | COPd | N/A | - |
| Zweiwertige Temperatur | $T_{biv}$ | -7 | °C | Für Luft/Wasser-Wärmepumpen: Betriebsgrenztemperatur | TOL | -10 | °C |
| Zyklusintervallkapazität für Heizung | $P_{cych}$ | N/A | kW | Zyklus-Intervall-Effizienz | $COP_{cyc}$ | N/A | - |
| Abbaukoeffizient (**) | $C_{dh}$ | 0.9 | kW | Betriebsgrenztemperatur Heizwasser | WTOL | 65 | °C |
| Stromverbrauch in anderen Modi als dem aktiven Modus | | | | Zusatzheizung | | | |
| Aus-Modus | $P_{OFF}$ | 0.014 | kW | | | | |
| Thermostat-Aus-Modus | $P_{TO}$ | 0.024 | kW | Nennwärmeleistung (**) | $P_{sup}$ | 1.6 | kW |
| Standby Modus | $P_{SB}$ | 0.014 | kW | | | | |
| Kurbelgehäuseheizungsmodus | $P_{CK}$ | 0.000 | kW | Art der Energiezufuhr | Elektrisch | | |

| | | | | | | | |
|---|---|---|---|---|---|---|---|
| **Andere Dinge** | | | | | | | |
| Kapazitätskontrolle | Variable | | | Bei Luft/Wasser-Wärmepumpen: Nennluftvolumenstrom, außen | - | 6000 | $m^3/h$ |
| Schallleistungspegel, innen/außen | $L_{WA}$ | -/68 | dB | Für Wasser- oder Sole/Wasser-Wärmepumpen: Sole- oder Wasser- Nennvolumenstrom Außenwärmetauscher | - | N/A | $m^3/h$ |
| Jährlicher Energieverbrauch | $Q_{HE}$ | 6838 | kWh | | | | |
| Für Kombiheizgeräte mit Wärmepumpe: | | | | | | | |
| **Deklariertes Lastprofil** | N/A | | | **Energieeffizienz der Warmwasserbereitung** | $\eta_{wh}$ | N/A | % |
| Täglicher Stromverbrauch | $Q_{elec}$ | N/A | kWh | Täglicher Kraftstoffverbrauch | $Q_{fuel}$ | N/A | kWh |
| Jährlicher Stromverbrauch | AEC | N/A | kWh | Jährlicher Kraftstoffverbrauch | AFC | N/A | GJ |
| Kontaktdetails | Siehe Rückseite des Handbuchs | | | | | | |

(*) Bei Raumheizgeräten mit Wärmepumpe und Kombiheizgeräten mit Wärmepumpe ist die Nennwärmeleistung Prated gleich der Auslegungslast zum Heizen Pdesignh, und die Nennwärmeleistung eines Zusatzheizgeräts Psup ist gleich der Zusatzleistung zum Heizen sup(Tj ). (**) Wenn Cdh nicht durch Messung bestimmt wird, ist der Standard-Degradationskoeffizient Cdh = 0,9.

# Technisch Parameter

| | |
|---|---|
| Modell(s): | 3-PH 16kW(Heizung 9kW);3-PH 16kW(Heizung 6kW); 3-PH 16kW(Heizung 3kW);3-PH 16kW |
| Luft-Wasser-Wärmepumpe | Ja |
| Wasser-Wasser-Wärmepumpe | nien |
| Sole/Wasser Wärmepumpe | nein |
| Niedertemperatur-Wärmepumpe | nein |
| Ausgestattet mit einer Zusatzheizung | ja(für 3-PH 16kW (Heizung 9kW); 3-PH 16kW (Heizung 6kW); 3-PH 16kW(Heizung 3kW))nein(für 3-PH 16kW) |
| Kombiheizgerät mit Wärmepumpe | nein |
| Deklarierter Klimazustand; | Wärmer |
| Parameter sind für Anwendungen bei niedrigen Temperaturen deklariert. | |

| Artikel | Symbol | Wert | Einheit | Artikel | Symbol | Wert | Einheit |
|---|---|---|---|---|---|---|---|
| **Nennwärmeleistung (*)** | Bewertet | 13 | kW | **Saisonale Raumheizungs-Energieeffizienz** | $\eta_s$ | 239 | % |
| Angegebene Heizleistung bei Teillast bei Innentemperatur 20 °C und Außentemperatur $T_j$ | | | | Angegebene Heizleistung für Teillast bei Innentemperatur 20 °C und Außentemperatur $T_j$ | | | |
| $T_j$ = – 7°C | Bewertet | N/A | kW | $T_j$= – 7°C | COPd | N/A | - |
| $T_j$ = + 2°C | Pdh | 13.3 | kW | $T_j$ = + 2°C | COPd | 3.33 | - |
| $T_j$ = +7°C | Pdh | 8.6 | kW | $T_j$= +7°C | COPd | 5.20 | - |
| $T_j$ = + 12°C | $P_{dh}$ | 4.8 | kW | $T_j$ = + 12°C | COPd | 7.95 | - |
| $T_j$= zweiwertige Temperatur | $P_{dh}$ | 8.6 | kW | $T_j$ = zweiwertige Temperatur | COPd | 5.20 | - |
| $T_j$= Betriebsgrenztemperatur | $P_{dh}$ | 13.3 | kW | $T_j$ = Betriebsgrenztemperatur | COPd | 3.33 | - |
| Für Luft/Wasser-Wärmepumpen: $T_j$ = – 15 °C (wenn TOL < – 20 °C) | Pdh | N/A | kW | Für Luft/Wasser-Wärmepumpen: Tj = – 15 °C (wenn TOL < – 20 °C) | COPd | N/A | - |
| Zweiwertige Temperatur | $T_{biv}$ | 7 | °C | Für Luft/Wasser-Wärmepumpen: Betriebsgrenztemperatur | TOL | 2 | °C |
| Zyklusintervallkapazität für Heizung | $P_{cych}$ | N/A | kW | Zyklus-Intervall-Effizienz | $COP_{cyc}$ | N/A | - |
| Abbaukoeffizient (**) | $C_{dh}$ | 0.9 | kW | Betriebsgrenztemperatur Heizwasser | WTOL | 65 | °C |
| Stromverbrauch in anderen Modi als dem aktiven Modus | | | | Zusatzheizung | | | |
| Aus-Modus | $P_{OFF}$ | 0.014 | kW | | | | |
| Thermostat-Aus-Modus | $P_{TO}$ | 0.024 | kW | Nennwärmeleistung (**) | $P_{sup}$ | 0.0 | kW |
| Standby Modus | $P_{SB}$ | 0.014 | kW | | | | |
| Kurbelgehäuseheizungsmodus | $P_{CK}$ | 0.000 | kW | Art der Energiezufuhr | Elektrisch | | |

| **Andere Dinge** | | | | | | | |
|---|---|---|---|---|---|---|---|
| Kapazitätskontrolle | Variable | | | Bei Luft/Wasser-Wärmepumpen: Nennluftvolumenstrom, außen | - | 6000 | $m^3/h$ |
| Schallleistungspegel, innen/außen | $L_{WA}$ | -/68 | dB | Für Wasser- oder Sole/Wasser-Wärmepumpen: Sole- oder Wasser- Nennvolumenstrom Außenwärmetauscher | - | N/A | $m^3/h$ |
| Jährlicher Energieverbrauch | $Q_{HE}$ | 2933 | kWh | | | | |
| Für Kombiheizgeräte mit Wärmepumpe: | | | | | | | |
| **Deklariertes Lastprofil** | N/A | | | **Energieeffizienz der Warmwasserbereitung** | $\eta_{wh}$ | N/A | % |
| Täglicher Stromverbrauch | $Q_{elec}$ | N/A | kWh | Täglicher Kraftstoffverbrauch | $Q_{fuel}$ | N/A | kWh |
| Jährlicher Stromverbrauch | AEC | N/A | kWh | Jährlicher Kraftstoffverbrauch | AFC | N/A | GJ |
| Kontaktdetails | Siehe Rückseite des Handbuchs | | | | | | |

(*) Bei Raumheizgeräten mit Wärmepumpe und Kombiheizgeräten mit Wärmepumpe ist die Nennwärmeleistung Prated gleich der Auslegungslast zum Heizen Pdesignh, und die Nennwärmeleistung eines Zusatzheizgeräts Psup ist gleich der Zusatzleistung zum Heizen sup(Tj ). (**) Wenn Cdh nicht durch Messung bestimmt wird, ist der Standard-Degradationskoeffizient Cdh = 0,9.

# Technisch Parameter

| | |
|---|---|
| Modell(s): | 3-PH 16kW(Heizung 9kW);3-PH 16kW(Heizung 6kW); 3-PH 16kW(Heizung 3kW);3-PH 16kW |
| Luft-Wasser-Wärmepumpe | Ja |
| Wasser-Wasser-Wärmepumpe | nien |
| Sole/Wasser Wärmepumpe | nein |
| Niedertemperatur-Wärmepumpe | nein |
| Ausgestattet mit einer Zusatzheizung | ja(für 3-PH 16kW (Heizung 9kW); 3-PH 16kW (Heizung 6kW); 3-PH 16kW(Heizung 3kW))nein(für 3-PH 16kW) |
| Kombiheizgerät mit Wärmepumpe | nein |
| Deklarierter Klimazustand; | kälter |
| Parameter sind für Anwendungen bei niedrigen Temperaturen deklariert. | |

| Artikel | Symbol | Wert | Einheit | Artikel | Symbol | Wert | Einheit |
|---|---|---|---|---|---|---|---|
| **Nennwärmeleistung (*)** | Bewertet | 14 | kW | **Saisonale Raumheizungs-Energieeffizienz** | $\eta_s$ | 156 | % |
| Angegebene Heizleistung bei Teillast bei Innentemperatur 20 °C und Außentemperatur $T_j$ | | | | Angegebene Heizleistung für Teillast bei Innentemperatur 20 °C und Außentemperatur $T_j$ | | | |
| $T_j$ = – 7°C | Bewertet | 9.1 | kW | $T_j$= – 7°C | COPd | 3.32 | - |
| $T_j$ = + 2°C | Pdh | 5.0 | kW | $T_j$ = + 2°C | COPd | 4.88 | - |
| $T_j$ = +7°C | Pdh | 4.2 | kW | $T_j$= +7°C | COPd | 6.50 | - |
| $T_j$ = + 12°C | $P_{dh}$ | 3.7 | kW | $T_j$ = + 12°C | COPd | 7.59 | - |
| $T_j$= zweiwertige Temperatur | $P_{dh}$ | 11.3 | kW | $T_j$ = zweiwertige Temperatur | COPd | 2.28 | - |
| $T_j$= Betriebsgrenztemperatur | $P_{dh}$ | 9.8 | kW | $T_j$ = Betriebsgrenztemperatur | COPd | 1.89 | - |
| Für Luft/Wasser-Wärmepumpen: $T_j$ = – 15 °C (wenn TOL < – 20 °C) | Pdh | N/A | kW | Für Luft/Wasser-Wärmepumpen: Tj = – 15 °C (wenn TOL < – 20 °C) | COPd | N/A | - |
| Zweiwertige Temperatur | $T_{biv}$ | -15 | °C | Für Luft/Wasser-Wärmepumpen: Betriebsgrenztemperatur | TOL | -22 | °C |
| Zyklusintervallkapazität für Heizung | $P_{cych}$ | N/A | kW | Zyklus-Intervall-Effizienz | $COP_{cyc}$ | N/A | - |
| Abbaukoeffizient (**) | $C_{dh}$ | 0.9 | kW | Betriebsgrenztemperatur Heizwasser | WTOL | 65 | °C |
| Stromverbrauch in anderen Modi als dem aktiven Modus | | | | Zusatzheizung | | | |
| Aus-Modus | $P_{OFF}$ | 0.014 | kW | | | | |
| Thermostat-Aus-Modus | $P_{TO}$ | 0.024 | kW | Nennwärmeleistung (**) | $P_{sup}$ | 4.2 | kW |
| Standby Modus | $P_{SB}$ | 0.014 | kW | | | | |
| Kurbelgehäuseheizungsmodus | $P_{CK}$ | 0.000 | kW | Art der Energiezufuhr | Elektrisch | | |

| **Andere Dinge** | | | | | | | |
|---|---|---|---|---|---|---|---|
| Kapazitätskontrolle | Variable | | | Bei Luft/Wasser-Wärmepumpen: Nennluftvolumenstrom, außen | - | 6000 | $m^3/h$ |
| Schallleistungspegel, innen/außen | $L_{WA}$ | -/68 | dB | Für Wasser- oder Sole/Wasser-Wärmepumpen: Sole- oder Wasser- Nennvolumenstrom Außenwärmetauscher | - | N/A | $m^3/h$ |
| Jährlicher Energieverbrauch | $Q_{HE}$ | 8597 | kWh | | | | |
| Für Kombiheizgeräte mit Wärmepumpe: | | | | | | | |
| **Deklariertes Lastprofil** | N/A | | | **Energieeffizienz der Warmwasserbereitung** | $\eta_{wh}$ | N/A | % |
| Täglicher Stromverbrauch | $Q_{elec}$ | N/A | kWh | Täglicher Kraftstoffverbrauch | $Q_{fuel}$ | N/A | kWh |
| Jährlicher Stromverbrauch | AEC | N/A | kWh | Jährlicher Kraftstoffverbrauch | AFC | N/A | GJ |
| Kontaktdetails | Siehe Rückseite des Handbuchs | | | | | | |

(*) Bei Raumheizgeräten mit Wärmepumpe und Kombiheizgeräten mit Wärmepumpe ist die Nennwärmeleistung Prated gleich der Auslegungslast zum Heizen Pdesignh, und die Nennwärmeleistung eines Zusatzheizgeräts Psup ist gleich der Zusatzleistung zum Heizen sup(Tj ). (**) Wenn Cdh nicht durch Messung bestimmt wird, ist der Standard-Degradationskoeffizient Cdh = 0,9.

# Technisch Parameter

| | |
|---|---|
| Modell(s): | 3-PH 16kW(Heizung 9kW);3-PH 16kW(Heizung 6kW); 3-PH 16kW(Heizung 3kW);3-PH 16kW |
| Luft-Wasser-Wärmepumpe | Ja |
| Wasser-Wasser-Wärmepumpe | nien |
| Sole/Wasser Wärmepumpe | nein |
| Niedertemperatur-Wärmepumpe | nein |
| Ausgestattet mit einer Zusatzheizung | ja(für 3-PH 16kW (Heizung 9kW); 3-PH 16kW (Heizung 6kW); 3-PH 16kW(Heizung 3kW))nein(für 3-PH 16kW) |
| Kombiheizgerät mit Wärmepumpe | nein |
| Deklarierter Klimazustand; | Durchschnitt |
| Parameter werden für die Anwendung bei mittlerer Temperatur deklariert. | |

| Artikel | Symbol | Wert | Einheit | Artikel | Symbol | Wert | Einheit |
|---|---|---|---|---|---|---|---|
| **Nennwärmeleistung (*)** | Bewertet | 13 | kW | **Saisonale Raumheizungs-Energieeffizienz** | $\eta_s$ | 136 | % |
| Angegebene Heizleistung bei Teillast bei Innentemperatur 20 °C und Außentemperatur $T_j$ | | | | Angegebene Heizleistung für Teillast bei Innentemperatur 20 °C und Außentemperatur $T_j$ | | | |
| $T_j$ = – 7°C | Bewertet | 11.3 | kW | $T_j$= – 7°C | COPd | 2.04 | - |
| $T_j$ = + 2°C | Pdh | 7.3 | kW | $T_j$ = + 2°C | COPd | 3.33 | - |
| $T_j$ = +7°C | Pdh | 4.8 | kW | $T_j$= +7°C | COPd | 4.81 | - |
| $T_j$ = + 12°C | $P_{dh}$ | 4.0 | kW | $T_j$ = + 12°C | COPd | 7.36 | - |
| $T_j$= zweiwertige Temperatur | $P_{dh}$ | 11.3 | kW | $T_j$ = zweiwertige Temperatur | COPd | 2.04 | - |
| $T_j$= Betriebsgrenztemperatur | $P_{dh}$ | 11.3 | kW | $T_j$ = Betriebsgrenztemperatur | COPd | 1.78 | - |
| Für Luft/Wasser-Wärmepumpen: $T_j$ = – 15 °C (wenn TOL < – 20 °C) | Pdh | N/A | kW | Für Luft/Wasser-Wärmepumpen: Tj = – 15 °C (wenn TOL < – 20 °C) | COPd | N/A | - |
| Zweiwertige Temperatur | $T_{biv}$ | -7 | °C | Für Luft/Wasser-Wärmepumpen: Betriebsgrenztemperatur | TOL | -10 | °C |
| Zyklusintervallkapazität für Heizung | $P_{cych}$ | N/A | kW | Zyklus-Intervall-Effizienz | $COP_{cyc}$ | N/A | - |
| Abbaukoeffizient (**) | $C_{dh}$ | 0.9 | kW | Betriebsgrenztemperatur Heizwasser | WTOL | 65 | °C |
| Stromverbrauch in anderen Modi als dem aktiven Modus | | | | Zusatzheizung | | | |
| Aus-Modus | $P_{OFF}$ | 0.014 | kW | | | | |
| Thermostat-Aus-Modus | $P_{TO}$ | 0.024 | kW | Nennwärmeleistung (**) | $P_{sup}$ | 1.7 | kW |
| Standby Modus | $P_{SB}$ | 0.014 | kW | | | | |
| Kurbelgehäuseheizungsmodus | $P_{CK}$ | 0.000 | kW | Art der Energiezufuhr | Elektrisch | | |

| **Andere Dinge** | | | | | | | |
|---|---|---|---|---|---|---|---|
| Kapazitätskontrolle | Variable | | | Bei Luft/Wasser-Wärmepumpen: Nennluftvolumenstrom, außen | - | 6000 | $m^3/h$ |
| Schallleistungspegel, innen/außen | $L_{WA}$ | -/68 | dB | Für Wasser- oder Sole/Wasser-Wärmepumpen: Sole- oder Wasser- Nennvolumenstrom Außenwärmetauscher | - | N/A | $m^3/h$ |
| Jährlicher Energieverbrauch | $Q_{HE}$ | 7571 | kWh | | | | |
| Für Kombiheizgeräte mit Wärmepumpe: | | | | | | | |
| **Deklariertes Lastprofil** | N/A | | | **Energieeffizienz der Warmwasserbereitung** | $\eta_{wh}$ | N/A | % |
| Täglicher Stromverbrauch | $Q_{elec}$ | N/A | kWh | Täglicher Kraftstoffverbrauch | $Q_{fuel}$ | N/A | kWh |
| Jährlicher Stromverbrauch | AEC | N/A | kWh | Jährlicher Kraftstoffverbrauch | AFC | N/A | GJ |
| Kontaktdetails | Siehe Rückseite des Handbuchs | | | | | | |

(*) Bei Raumheizgeräten mit Wärmepumpe und Kombiheizgeräten mit Wärmepumpe ist die Nennwärmeleistung Prated gleich der Auslegungslast zum Heizen Pdesignh, und die Nennwärmeleistung eines Zusatzheizgeräts Psup ist gleich der Zusatzleistung zum Heizen sup(Tj ). (**) Wenn Cdh nicht durch Messung bestimmt wird, ist der Standard-Degradationskoeffizient Cdh = 0,9.

# Technisch Parameter

| | |
|---|---|
| Modell(s): | 3-PH 16kW(Heizung 9kW);3-PH 16kW(Heizung 6kW); 3-PH 16kW(Heizung 3kW);3-PH 16kW |
| Luft-Wasser-Wärmepumpe | Ja |
| Wasser-Wasser-Wärmepumpe | nien |
| Sole/Wasser Wärmepumpe | nein |
| Niedertemperatur-Wärmepumpe | nein |
| Ausgestattet mit einer Zusatzheizung | ja(für 3-PH 16kW (Heizung 9kW); 3-PH 16kW (Heizung 6kW); 3-PH 16kW(Heizung 3kW))nein(für 3-PH 16kW) |
| Kombiheizgerät mit Wärmepumpe | nein |
| Deklarierter Klimazustand; | Wärmer |
| Parameter werden für die Anwendung bei mittlerer Temperatur deklariert. | |

| Artikel | Symbol | Wert | Einheit | Artikel | Symbol | Wert | Einheit |
|---|---|---|---|---|---|---|---|
| **Nennwärmeleistung (*)** | Bewertet | 14 | kW | **Saisonale Raumheizungs-Energieeffizienz** | $\eta_s$ | 171 | % |
| Angegebene Heizleistung bei Teillast bei Innentemperatur 20 °C und Außentemperatur $T_j$ | | | | Angegebene Heizleistung für Teillast bei Innentemperatur 20 °C und Außentemperatur $T_j$ | | | |
| $T_j$ = – 7°C | Bewertet | N/A | kW | $T_j$= – 7°C | COPd | N/A | - |
| $T_j$ = + 2°C | Pdh | 13.2 | kW | $T_j$ = + 2°C | COPd | 2.32 | - |
| $T_j$ = +7°C | Pdh | 9.1 | kW | $T_j$= +7°C | COPd | 3.70 | - |
| $T_j$ = + 12°C | $P_{dh}$ | 4.1 | kW | $T_j$ = + 12°C | COPd | 5.80 | - |
| $T_j$= zweiwertige Temperatur | $P_{dh}$ | 9.1 | kW | $T_j$ = zweiwertige Temperatur | COPd | 3.70 | - |
| $T_j$= Betriebsgrenztemperatur | $P_{dh}$ | 13.2 | kW | $T_j$ = Betriebsgrenztemperatur | COPd | 2.32 | - |
| Für Luft/Wasser-Wärmepumpen: $T_j$ = – 15 °C (wenn TOL < – 20 °C) | Pdh | N/A | kW | Für Luft/Wasser-Wärmepumpen: Tj = – 15 °C (wenn TOL < – 20 °C) | COPd | N/A | - |
| Zweiwertige Temperatur | $T_{biv}$ | 7 | °C | Für Luft/Wasser-Wärmepumpen: Betriebsgrenztemperatur | TOL | 2 | °C |
| Zyklusintervallkapazität für Heizung | $P_{cych}$ | N/A | kW | Zyklus-Intervall-Effizienz | $COP_{cyc}$ | N/A | - |
| Abbaukoeffizient (**) | $C_{dh}$ | 0.9 | kW | Betriebsgrenztemperatur Heizwasser | WTOL | 65 | °C |
| Stromverbrauch in anderen Modi als dem aktiven Modus | | | | Zusatzheizung | | | |
| Aus-Modus | $P_{OFF}$ | 0.014 | kW | | | | |
| Thermostat-Aus-Modus | $P_{TO}$ | 0.024 | kW | Nennwärmeleistung (**) | $P_{sup}$ | 0.8 | kW |
| Standby Modus | $P_{SB}$ | 0.014 | kW | | | | |
| Kurbelgehäuseheizungsmodus | $P_{CK}$ | 0.000 | kW | Art der Energiezufuhr | Elektrisch | | |

| | | | | | | | |
|---|---|---|---|---|---|---|---|
| **Andere Dinge** | | | | | | | |
| Kapazitätskontrolle | Variable | | | Bei Luft/Wasser-Wärmepumpen: Nennluftvolumenstrom, außen | - | 6000 | $m^3/h$ |
| Schallleistungspegel, innen/außen | $L_{WA}$ | -/68 | dB | Für Wasser- oder Sole/Wasser-Wärmepumpen: Sole- oder Wasser- Nennvolumenstrom Außenwärmetauscher | - | N/A | $m^3/h$ |
| Jährlicher Energieverbrauch | $Q_{HE}$ | 4321 | kWh | | | | |
| Für Kombiheizgeräte mit Wärmepumpe: | | | | | | | |
| **Deklariertes Lastprofil** | N/A | | | **Energieeffizienz der Warmwasserbereitung** | $\eta_{wh}$ | N/A | % |
| Täglicher Stromverbrauch | $Q_{elec}$ | N/A | kWh | Täglicher Kraftstoffverbrauch | $Q_{fuel}$ | N/A | kWh |
| Jährlicher Stromverbrauch | AEC | N/A | kWh | Jährlicher Kraftstoffverbrauch | AFC | N/A | GJ |
| Kontaktdetails | Siehe Rückseite des Handbuchs | | | | | | |

(*) Bei Raumheizgeräten mit Wärmepumpe und Kombiheizgeräten mit Wärmepumpe ist die Nennwärmeleistung Prated gleich der Auslegungslast zum Heizen Pdesignh, und die Nennwärmeleistung eines Zusatzheizgeräts Psup ist gleich der Zusatzleistung zum Heizen sup(Tj ). (**) Wenn Cdh nicht durch Messung bestimmt wird, ist der Standard-Degradationskoeffizient Cdh = 0,9.

# Technisch Parameter

| | |
|---|---|
| Modell(s): | 3-PH 16kW(Heizung 9kW);3-PH 16kW(Heizung 6kW); 3-PH 16kW(Heizung 3kW);3-PH 16kW |
| Luft-Wasser-Wärmepumpe | Ja |
| Wasser-Wasser-Wärmepumpe | nien |
| Sole/Wasser Wärmepumpe | nein |
| Niedertemperatur-Wärmepumpe | nein |
| Ausgestattet mit einer Zusatzheizung | ja(für 3-PH 16kW (Heizung 9kW); 3-PH 16kW (Heizung 6kW); 3-PH 16kW(Heizung 3kW))nein(für 3-PH 16kW) |
| Kombiheizgerät mit Wärmepumpe | nein |
| Deklarierter Klimazustand; | kälter |
| Parameter werden für die Anwendung bei mittlerer Temperatur deklariert. | |

| Artikel | Symbol | Wert | Einheit | Artikel | Symbol | Wert | Einheit |
|---|---|---|---|---|---|---|---|
| **Nennwärmeleistung (*)** | Bewertet | 12 | kW | **Saisonale Raumheizungs-Energieeffizienz** | $\eta_s$ | 121 | % |
| Angegebene Heizleistung bei Teillast bei Innentemperatur 20 °C und Außentemperatur $T_j$ | | | | Angegebene Heizleistung für Teillast bei Innentemperatur 20 °C und Außentemperatur $T_j$ | | | |
| $T_j$ = – 7°C | Bewertet | 7.8 | kW | $T_j$= – 7°C | COPd | 2.64 | - |
| $T_j$ = + 2°C | Pdh | 4.5 | kW | $T_j$ = + 2°C | COPd | 3.78 | - |
| $T_j$ = +7°C | Pdh | 3.2 | kW | $T_j$= +7°C | COPd | 4.87 | - |
| $T_j$ = + 12°C | $P_{dh}$ | 3.7 | kW | $T_j$ = + 12°C | COPd | 6.40 | - |
| $T_j$= zweiwertige Temperatur | $P_{dh}$ | 9.6 | kW | $T_j$ = zweiwertige Temperatur | COPd | 1.85 | - |
| $T_j$= Betriebsgrenztemperatur | $P_{dh}$ | 5.1 | kW | $T_j$ = Betriebsgrenztemperatur | COPd | 1.04 | - |
| Für Luft/Wasser-Wärmepumpen: $T_j$ = – 15 °C (wenn TOL < – 20 °C) | Pdh | N/A | kW | Für Luft/Wasser-Wärmepumpen: Tj = – 15 °C (wenn TOL < – 20 °C) | COPd | N/A | - |
| Zweiwertige Temperatur | $T_{biv}$ | -15 | °C | Für Luft/Wasser-Wärmepumpen: Betriebsgrenztemperatur | TOL | -22 | °C |
| Zyklusintervallkapazität für Heizung | $P_{cych}$ | N/A | kW | Zyklus-Intervall-Effizienz | $COP_{cyc}$ | N/A | - |
| Abbaukoeffizient (**) | $C_{dh}$ | 0.9 | kW | Betriebsgrenztemperatur Heizwasser | WTOL | 65 | °C |
| Stromverbrauch in anderen Modi als dem aktiven Modus | | | | Zusatzheizung | | | |
| Aus-Modus | $P_{OFF}$ | 0.014 | kW | | | | |
| Thermostat-Aus-Modus | $P_{TO}$ | 0.024 | kW | Nennwärmeleistung (**) | $P_{sup}$ | 6.9 | kW |
| Standby Modus | $P_{SB}$ | 0.014 | kW | | | | |
| Kurbelgehäuseheizungsmodus | $P_{CK}$ | 0.000 | kW | Art der Energiezufuhr | Elektrisch | | |

| **Andere Dinge** | | | | | | | |
|---|---|---|---|---|---|---|---|
| Kapazitätskontrolle | Variable | | | Bei Luft/Wasser-Wärmepumpen: Nennluftvolumenstrom, außen | - | 6000 | $m^3/h$ |
| Schallleistungspegel, innen/außen | $L_{WA}$ | -/68 | dB | Für Wasser- oder Sole/Wasser-Wärmepumpen: Sole- oder Wasser- Nennvolumenstrom Außenwärmetauscher | - | N/A | $m^3/h$ |
| Jährlicher Energieverbrauch | $Q_{HE}$ | 9356 | kWh | | | | |
| Für Kombiheizgeräte mit Wärmepumpe: | | | | | | | |
| **Deklariertes Lastprofil** | N/A | | | **Energieeffizienz der Warmwasserbereitung** | $\eta_{wh}$ | N/A | % |
| Täglicher Stromverbrauch | $Q_{elec}$ | N/A | kWh | Täglicher Kraftstoffverbrauch | $Q_{fuel}$ | N/A | kWh |
| Jährlicher Stromverbrauch | AEC | N/A | kWh | Jährlicher Kraftstoffverbrauch | AFC | N/A | GJ |
| Kontaktdetails | Siehe Rückseite des Handbuchs | | | | | | |

(*) Bei Raumheizgeräten mit Wärmepumpe und Kombiheizgeräten mit Wärmepumpe ist die Nennwärmeleistung Prated gleich der Auslegungslast zum Heizen Pdesignh, und die Nennwärmeleistung eines Zusatzheizgeräts Psup ist gleich der Zusatzleistung zum Heizen sup(Tj ). (**) Wenn Cdh nicht durch Messung bestimmt wird, ist der Standard-Degradationskoeffizient Cdh = 0,9.

# Informationspflichten für Komfortkühler

| | |
|---|---|
| Modell(s): | 4 kW (Heizung 3 kW) ;4 kW |
| Außenseitiger Wärmetauscher des Chillers | Luft zu Wasser |
| Innenseitiger Wärmetauscher-Kühler | Wasser |
| Typ: | Kompressorbetriebene Dampfkompression |
| Treiber für Kompressor | Elektromotor |

| Artikel | Symbol | Wert | Einheit | Artikel | Symbol | Wert | Einheit |
|---|---|---|---|---|---|---|---|
| **Nennwärmeleistung (*)** | Prated .c | 4.6 | kW | **Saisonale Raumheizungs-Energieeffizienz** | ηs,c | 216 | % |
| Angegebene Kühlkapazität für Teillast bei gegebener Außentemperatur $T_j$ | | | | Erklärter Energieeffizienzfaktor für Kühlung bei Teillast bei gegebener Außentemperatur $T_j$ | | | |
| $Tj_{=}$ + 35 °C | $P_{dc}$ | 4.6 | kW | Tj = +35 °C | EERd | 3.38 | - |
| $Tj_{=}$ + 30 °C | $P_{dc}$ | 3.5 | kW | $Tj_{=}$ + 30 °C | EERd | 4.60 | - |
| $Tj_{=}$ + 25 °C | $P_{dc}$ | 2.2 | kW | $Tj_{=}$ + 25 °C | EERd | 6.23 | - |
| $Tj_{=}$ + 20 °C | $P_{dc}$ | 1.0 | kW | $Tj_{=}$ + 20 °C | EERd | 7.69 | - |
| Verschlechterungskoeffizient des Kühlers (*) | $C_{dc}$ | 0.9 | kW | | | | |
| Stromverbrauch in anderen Modi als „aktiver Modus “ | | | | | | | |
| Aus-Modus | $P_{OFF}$ | 0,010 | kW | Kurbelgehäuseheizungsmodus | $P_{ck}$ | 0,000 | KW |
| Thermostat-Aus-Modus | $P_{TO}$ | 0,010 | kW | Standby Modus | $P_{SB}$ | 0,010 | KW |

Andere Dinge

| | | | | | | | |
|---|---|---|---|---|---|---|---|
| Kapazitätskontrolle | Variable | | | **Für Luft-Wasser-Komfortkühler; Luftdurchsatz, im Freien gemessen.** | - | 2600 | $m^3/h$ |
| Schallleistungspegel, innen/außen | LWA | -/56 | dB | Für Wasser/Sole-Wasser-Kaltwassersätze; Sole- oder Wassernenndurchfluss außenseitiger Wärmetauscher | - | N/A | $m^3/h$ |
| Emissionen von Stickoxiden (falls zutreffend) | NOx(**) | - | Mg/kWh Input GCV | | | | |
| GWP des Kältemittels | - | 675 | kg $CO_2$ eq (100 Jahre) | | | | |
| Verwendete Standardbewertungsbedingungen | Anwendung bei niedrigen Temperaturen | | | | | | |
| Kontaktdetails | Siehe Rückseite des Handbuchs | | | | | | |

(**) Wenn Cdh nicht durch Messung bestimmt wird, muss der standardmäßige Degradationskoeffizient von Kühlern sein 0,9.

(**) Ab 26. September 2018.

# Informationspflichten für Komfortkühler

| | |
|---|---|
| Modell(s): | 4KW (Heizung 3 kW) ;4KW |
| Außenseitiger Wärmetauscher des Chillers | Luft zu Wasser |
| Innenseitiger Wärmetauscher-Kühler | Wasser |
| Typ: | Kompressorbetriebene Dampfkompression |
| Treiber für Kompressor | Elektromotor |

| Artikel | Symbol | Wert | Einheit | Artikel | Symbol | Wert | Einheit |
|---|---|---|---|---|---|---|---|
| **Nennwärmeleistung (*)** | Prated .c | 4.5 | kW | **Saisonale Raumheizungs-Energieeffizienz** | ηs,c | 305 | % |
| Angegebene Kühlkapazität für Teillast bei gegebener Außentemperatur $T_j$ | | | | Erklärter Energieeffizienzfaktor für Kühlung bei Teillast bei gegebener Außentemperatur $T_j$ | | | |
| Tj = + 35 °C | $P_{dc}$ | 4.5 | kW | Tj = +35 °C | EERd | 5.64 | - |
| Tj = + 30 °C | $P_{dc}$ | 3.4 | kW | Tj = + 30 °C | EERd | 7.47 | - |
| Tj = + 25 °C | $P_{dc}$ | 2.3 | kW | Tj = + 25 °C | EERd | 8.97 | - |
| Tj = + 20 °C | $P_{dc}$ | 1.0 | kW | Tj = + 20 °C | EERd | 8.81 | - |
| Verschlechterungskoeffizient des Kühlers (*) | $C_{dc}$ | 0.9 | kW | | | | |
| Stromverbrauch in anderen Modi als „aktiver Modus “ | | | | | | | |
| Aus-Modus | $P_{OFF}$ | 0,010 | kW | Kurbelgehäuseheizungsmodus | $P_{ck}$ | 0,000 | KW |
| Thermostat-Aus-Modus | $P_{TO}$ | 0,010 | kW | Standby Modus | $P_{SB}$ | 0,010 | KW |
| Andere Dinge | | | | | | | |
| Kapazitätskontrolle | Variable | | | **Für Luft-Wasser-Komfortkühler; Luftdurchsatz, im Freien gemessen.** | - | 2600 | $m^3/h$ |
| Schallleistungspegel, innen/außen | LWA | -/56 | dB | Für Wasser/Sole-Wasser-Kaltwassersätze; Sole- oder Wassernenndurchfluss außenseitiger Wärmetauscher | - | N/A | $m^3/h$ |
| Emissionen von Stickoxiden (falls zutreffend) | NOx(**) | - | Mg/kWh Input GCV | | | | |
| GWP des Kältemittels | - | 675 | kg $CO_2$ eq (100 Jahre) | | | | |
| Verwendete Standardbewertungsbedingungen | Anwendung bei mittlerer Temperatur | | | | | | |
| Kontaktdetails | Siehe Rückseite des Handbuchs | | | | | | |

(**) Wenn Cdh nicht durch Messung bestimmt wird, muss der standardmäßige Degradationskoeffizient von Kühlern sein 0,9.

(**) Ab 26. September 2018.

# Informationspflichten für Komfortkühler

| | |
|---|---|
| Modell(s): | 6KW (Heizung 3 kW) ;6KW |
| Außenseitiger Wärmetauscher des Chillers | Luft zu Wasser |
| Innenseitiger Wärmetauscher-Kühler | Wasser |
| Typ: | Kompressorbetriebene Dampfkompression |
| Treiber für Kompressor | Elektromotor |

| Artikel | Symbol | Wert | Einheit | Artikel | Symbol | Wert | Einheit |
|---|---|---|---|---|---|---|---|
| **Nennwärmeleistung (*)** | Prated .c | 6.1 | kW | **Saisonale Raumheizungs-Energieeffizienz** | ηs,c | 207 | % |
| Angegebene Kühlkapazität für Teillast bei gegebener Außentemperatur $T_j$ | | | | Erklärter Energieeffizienzfaktor für Kühlung bei Teillast bei gegebener Außentemperatur $T_j$ | | | |
| $T_j$ = + 35 °C | $P_{dc}$ | 6.1 | kW | Tj = +35 °C | EERd | 3.22 | - |
| $T_j$ = + 30 °C | $P_{dc}$ | 4.7 | kW | $T_j$ = + 30 °C | EERd | 4.68 | - |
| $T_j$ = + 25 °C | $P_{dc}$ | 2.8 | kW | $T_j$ = + 25 °C | EERd | 6.25 | - |
| $T_j$ = + 20 °C | $P_{dc}$ | 1.2 | kW | $T_j$ = + 20 °C | EERd | 6.07 | - |
| Verschlechterungskoeffizient des Kühlers (*) | $C_{dc}$ | 0.9 | kW | | | | |
| Stromverbrauch in anderen Modi als „aktiver Modus “ | | | | | | | |
| Aus-Modus | $P_{OFF}$ | 0,010 | kW | Kurbelgehäuseheizungsmodus | $P_{ck}$ | 0,000 | KW |
| Thermostat-Aus-Modus | $P_{TO}$ | 0,010 | kW | Standby Modus | $P_{SB}$ | 0,010 | KW |
| Andere Dinge | | | | | | | |
| Kapazitätskontrolle | Variable | | | **Für Luft-Wasser-Komfortkühler; Luftdurchsatz, im Freien gemessen.** | - | 2800 | $m^3/h$ |
| Schallleistungspegel, innen/außen | LWA | -/59 | dB | Für Wasser/Sole-Wasser-Kaltwassersätze; Sole- oder Wassernenndurchfluss außenseitiger Wärmetauscher | - | N/A | $m^3/h$ |
| Emissionen von Stickoxiden (falls zutreffend) | NOx(**) | - | Mg/kWh Input GCV | | | | |
| GWP des Kältemittels | - | 675 | kg $CO_2$ eq (100 Jahre) | | | | |
| Verwendete Standardbewertungsbedingungen | Anwendung bei niedrigen Temperaturen | | | | | | |
| Kontaktdetails | Siehe Rückseite des Handbuchs | | | | | | |

(**) Wenn Cdh nicht durch Messung bestimmt wird, muss der standardmäßige Degradationskoeffizient von Kühlern sein 0,9.

(**) Ab 26. September 2018.

# Informationspflichten für Komfortkühler

| | |
|---|---|
| Modell(s): | 6KW (Heizung 3 kW) ;6KW |
| Außenseitiger Wärmetauscher des Chillers | Luft zu Wasser |
| Innenseitiger Wärmetauscher-Kühler | Wasser |
| Typ: | Kompressorbetriebene Dampfkompression |
| Treiber für Kompressor | Elektromotor |

| Artikel | Symbol | Wert | Einheit | Artikel | Symbol | Wert | Einheit |
|---|---|---|---|---|---|---|---|
| **Nennwärmeleistung (*)** | Prated .c | 6.1 | kW | **Saisonale Raumheizungs-Energieeffizienz** | ηs,c | 319 | % |
| Angegebene Kühlkapazität für Teillast bei gegebener Außentemperatur $T_j$ | | | | Erklärter Energieeffizienzfaktor für Kühlung bei Teillast bei gegebener Außentemperatur $T_j$ | | | |
| Tj = + 35 °C | $P_{dc}$ | 6.1 | kW | Tj = +35 °C | EERd | 5.19 | - |
| Tj = + 30 °C | $P_{dc}$ | 4.4 | kW | Tj = + 30 °C | EERd | 7.22 | - |
| Tj = + 25 °C | $P_{dc}$ | 2.9 | kW | Tj = + 25 °C | EERd | 10.09 | - |
| Tj = + 20 °C | $P_{dc}$ | 1.3 | kW | Tj = + 20 °C | EERd | 8.82 | - |
| Verschlechterungskoeffizient des Kühlers (*) | $C_{dc}$ | 0.9 | kW | | | | |
| Stromverbrauch in anderen Modi als „aktiver Modus “ | | | | | | | |
| Aus-Modus | $P_{OFF}$ | 0,010 | kW | Kurbelgehäuseheizungsmodus | $P_{ck}$ | 0,000 | KW |
| Thermostat-Aus-Modus | $P_{TO}$ | 0,010 | kW | Standby Modus | $P_{SB}$ | 0,010 | KW |
| Andere Dinge | | | | | | | |
| Kapazitätskontrolle | Variable | | | **Für Luft-Wasser-Komfortkühler; Luftdurchsatz, im Freien gemessen.** | - | 2800 | $m^3/h$ |
| Schallleistungspegel, innen/außen | LWA | -/59 | dB | Für Wasser/Sole-Wasser-Kaltwassersätze; Sole- oder Wassernenndurchfluss außenseitiger Wärmetauscher | - | N/A | $m^3/h$ |
| Emissionen von Stickoxiden (falls zutreffend) | NOx(**) | - | Mg/kWh Input GCV | | | | |
| GWP des Kältemittels | - | 675 | kg $CO_2$ eq (100 Jahre) | | | | |
| Verwendete Standardbewertungsbedingungen | Anwendung bei mittlerer Temperatur | | | | | | |
| Kontaktdetails | Siehe Rückseite des Handbuchs | | | | | | |

(**) Wenn Cdh nicht durch Messung bestimmt wird, muss der standardmäßige Degradationskoeffizient von Kühlern sein 0,9.

(**) Ab 26. September 2018.

# Informationspflichten für Komfortkühler

| | |
|---|---|
| Modell(s): | 8KW (Heizung 3 kW) ;8KW |
| Außenseitiger Wärmetauscher des Chillers | Luft zu Wasser |
| Innenseitiger Wärmetauscher-Kühler | Wasser |
| Typ: | Kompressorbetriebene Dampfkompression |
| Treiber für Kompressor | Elektromotor |

| Artikel | Symbol | Wert | Einheit | Artikel | Symbol | Wert | Einheit |
|---|---|---|---|---|---|---|---|
| **Nennwärmeleistung (*)** | Prated .c | 7 | kW | **Saisonale Raumheizungs-Energieeffizienz** | ηs,c | 214 | % |
| Angegebene Kühlkapazität für Teillast bei gegebener Außentemperatur $T_j$ | | | | Erklärter Energieeffizienzfaktor für Kühlung bei Teillast bei gegebener Außentemperatur $T_j$ | | | |
| Tj = + 35 °C | $P_{dc}$ | 7.0 | kW | Tj = +35 °C | EERd | 3.38 | - |
| Tj = + 30 °C | $P_{dc}$ | 5.7 | kW | Tj = + 30 °C | EERd | 4.60 | - |
| Tj = + 25 °C | $P_{dc}$ | 3.7 | kW | Tj = + 25 °C | EERd | 6.23 | - |
| Tj = + 20 °C | $P_{dc}$ | 1.7 | kW | Tj = + 20 °C | EERd | 7.69 | - |
| Verschlechterungskoeffizient des Kühlers (*) | $C_{dc}$ | 0.9 | kW | | | | |
| Stromverbrauch in anderen Modi als „aktiver Modus “ | | | | | | | |
| Aus-Modus | $P_{OFF}$ | 0,014 | kW | Kurbelgehäuseheizungsmodus | $P_{ck}$ | 0,000 | KW |
| Thermostat-Aus-Modus | $P_{TO}$ | 0,024 | kW | Standby Modus | $P_{SB}$ | 0,014 | KW |
| Andere Dinge | | | | | | | |
| Kapazitätskontrolle | Variable | | | **Für Luft-Wasser-Komfortkühler; Luftdurchsatz, im Freien gemessen.** | - | 4000 | $m^3/h$ |
| Schallleistungspegel, innen/außen | LWA | -/60 | dB | Für Wasser/Sole-Wasser-Kaltwassersätze; Sole- oder Wassernenndurchfluss außenseitiger Wärmetauscher | - | N/A | $m^3/h$ |
| Emissionen von Stickoxiden (falls zutreffend) | NOx(**) | - | Mg/kWh Input GCV | | | | |
| GWP des Kältemittels | - | 675 | kg $CO_2$ eq (100 Jahre) | | | | |
| Verwendete Standardbewertungsbedingungen | Anwendung bei niedrigen Temperaturen | | | | | | |
| Kontaktdetails | Siehe Rückseite des Handbuchs | | | | | | |

(**) Wenn Cdh nicht durch Messung bestimmt wird, muss der standardmäßige Degradationskoeffizient von Kühlern sein 0,9.

(**) Ab 26. September 2018.

# Informationspflichten für Komfortkühler

| | |
|---|---|
| Modell(s): | 8KW (Heizung 3 kW) ;8KW |
| Außenseitiger Wärmetauscher des Chillers | Luft zu Wasser |
| Innenseitiger Wärmetauscher-Kühler | Wasser |
| Typ: | Kompressorbetriebene Dampfkompression |
| Treiber für Kompressor | Elektromotor |

| Artikel | Symbol | Wert | Einheit | Artikel | Symbol | Wert | Einheit |
|---|---|---|---|---|---|---|---|
| **Nennwärmeleistung (*)** | Prated .c | 8 | kW | **Saisonale Raumheizungs-Energieeffizienz** | ηs,c | 318 | % |
| Angegebene Kühlkapazität für Teillast bei gegebener Außentemperatur $T_j$ | | | | Erklärter Energieeffizienzfaktor für Kühlung bei Teillast bei gegebener Außentemperatur $T_j$ | | | |
| $Tj_{=}$ + 35 °C | $P_{dc}$ | 8.0 | kW | Tj = +35 °C | EERd | 4.95 | - |
| $Tj_{=}$ + 30 °C | $P_{dc}$ | 6.4 | kW | $Tj_{=}$ + 30 °C | EERd | 6.61 | - |
| $Tj_{=}$ + 25 °C | $P_{dc}$ | 4.3 | kW | $Tj_{=}$ + 25 °C | EERd | 9.06 | - |
| $Tj_{=}$ + 20 °C | $P_{dc}$ | 1.8 | kW | $Tj_{=}$ + 20 °C | EERd | 13.14 | - |
| Verschlechterungskoeffizient des Kühlers (*) | $C_{dc}$ | 0.9 | kW | | | | |
| Stromverbrauch in anderen Modi als „aktiver Modus “ | | | | | | | |
| Aus-Modus | $P_{OFF}$ | 0,014 | kW | Kurbelgehäuseheizungsmodus | $P_{ck}$ | 0,000 | KW |
| Thermostat-Aus-Modus | $P_{TO}$ | 0,024 | kW | Standby Modus | $P_{SB}$ | 0,014 | KW |
| Andere Dinge | | | | | | | |
| Kapazitätskontrolle | Variable | | | **Für Luft-Wasser-Komfortkühler; Luftdurchsatz, im Freien gemessen.** | - | 4000 | $m^3/h$ |
| Schallleistungspegel, innen/außen | LWA | -/60 | dB | Für Wasser/Sole-Wasser-Kaltwassersätze; Sole- oder Wassernenndurchfluss außenseitiger Wärmetauscher | - | N/A | $m^3/h$ |
| Emissionen von Stickoxiden (falls zutreffend) | NOx(**) | - | Mg/kWh Input GCV | | | | |
| GWP des Kältemittels | - | 675 | kg $CO_2$ eq (100 Jahre) | | | | |
| Verwendete Standardbewertungsbedingungen | Anwendung bei mittlerer Temperatur | | | | | | |
| Kontaktdetails | Siehe Rückseite des Handbuchs | | | | | | |

(**) Wenn Cdh nicht durch Messung bestimmt wird, muss der standardmäßige Degradationskoeffizient von Kühlern sein 0,9.

(**) Ab 26. September 2018.

# Informationspflichten für Komfortkühler

| | |
|---|---|
| Modell(s): | 10KW (Heizung 3 kW) ;10KW |
| Außenseitiger Wärmetauscher des Chillers | Luft zu Wasser |
| Innenseitiger Wärmetauscher-Kühler | Wasser |
| Typ: | Kompressorbetriebene Dampfkompression |
| Treiber für Kompressor | Elektromotor |

| Artikel | Symbol | Wert | Einheit | Artikel | Symbol | Wert | Einheit |
|---|---|---|---|---|---|---|---|
| **Nennwärmeleistung (*)** | Prated .c | 8 | kW | **Saisonale Raumheizungs-Energieeffizienz** | ηs,c | 212 | % |
| Angegebene Kühlkapazität für Teillast bei gegebener Außentemperatur $T_j$ | | | | Erklärter Energieeffizienzfaktor für Kühlung bei Teillast bei gegebener Außentemperatur $T_j$ | | | |
| Tj = + 35 °C | $P_{dc}$ | 8.1 | kW | Tj = +35 °C | EERd | 3.16 | - |
| Tj = + 30 °C | $P_{dc}$ | 6.6 | kW | Tj = + 30 °C | EERd | 4.38 | - |
| Tj = + 25 °C | $P_{dc}$ | 4.3 | kW | Tj = + 25 °C | EERd | 6.18 | - |
| Tj = + 20 °C | $P_{dc}$ | 1.9 | kW | Tj = + 20 °C | EERd | 8.17 | - |
| Verschlechterungskoeffizient des Kühlers (*) | $C_{dc}$ | 0.9 | kW | | | | |
| Stromverbrauch in anderen Modi als „aktiver Modus “ | | | | | | | |
| Aus-Modus | $P_{OFF}$ | 0,014 | kW | Kurbelgehäuseheizungsmodus | $P_{ck}$ | 0,000 | KW |
| Thermostat-Aus-Modus | $P_{TO}$ | 0,024 | kW | Standby Modus | $P_{SB}$ | 0,014 | KW |
| Andere Dinge | | | | | | | |
| Kapazitätskontrolle | Variable | | | **Für Luft-Wasser-Komfortkühler; Luftdurchsatz, im Freien gemessen.** | - | 4500 | $m^3/h$ |
| Schallleistungspegel, innen/außen | LWA | -/61 | dB | Für Wasser/Sole-Wasser-Kaltwassersätze; Sole- oder Wassernenndurchfluss außenseitiger Wärmetauscher | - | N/A | $m^3/h$ |
| Emissionen von Stickoxiden (falls zutreffend) | NOx(**) | - | Mg/kWh Input GCV | | | | |
| GWP des Kältemittels | - | 675 | kg $CO_2$ eq (100 Jahre) | | | | |
| Verwendete Standardbewertungsbedingungen | Anwendung bei niedrigen Temperaturen | | | | | | |
| Kontaktdetails | Siehe Rückseite des Handbuchs | | | | | | |

(**) Wenn Cdh nicht durch Messung bestimmt wird, muss der standardmäßige Degradationskoeffizient von Kühlern sein 0,9.

(**) Ab 26. September 2018.

# Informationspflichten für Komfortkühler

| | |
|---|---|
| Modell(s): | 10KW (Heizung 3 kW) ;10KW |
| Außenseitiger Wärmetauscher des Chillers | Luft zu Wasser |
| Innenseitiger Wärmetauscher-Kühler | Wasser |
| Typ: | Kompressorbetriebene Dampfkompression |
| Treiber für Kompressor | Elektromotor |

| Artikel | Symbol | Wert | Einheit | Artikel | Symbol | Wert | Einheit |
|---|---|---|---|---|---|---|---|
| **Nennwärmeleistung (*)** | $P_{rated .c}$ | 10 | kW | **Saisonale Raumheizungs-Energieeffizienz** | ηs,c | 307 | % |
| Angegebene Kühlkapazität für Teillast bei gegebener Außentemperatur $T_j$ | | | | Erklärter Energieeffizienzfaktor für Kühlung bei Teillast bei gegebener Außentemperatur $T_j$ | | | |
| Tj = + 35 °C | $P_{dc}$ | 9.5 | kW | Tj = +35 °C | EERd | 4.56 | - |
| Tj = + 30 °C | $P_{dc}$ | 7.7 | kW | Tj = + 30 °C | EERd | 6.33 | - |
| Tj = + 25 °C | $P_{dc}$ | 4.9 | kW | Tj = + 25 °C | EERd | 8.48 | - |
| Tj = + 20 °C | $P_{dc}$ | 2.3 | kW | Tj = + 20 °C | EERd | 13.19 | - |
| Verschlechterungskoeffizient des Kühlers (*) | $C_{dc}$ | 0.9 | kW | | | | |
| Stromverbrauch in anderen Modi als „aktiver Modus “ | | | | | | | |
| Aus-Modus | $P_{OFF}$ | 0,014 | kW | Kurbelgehäuseheizungsmodus | $P_{ck}$ | 0,000 | KW |
| Thermostat-Aus-Modus | $P_{TO}$ | 0,024 | kW | Standby Modus | $P_{SB}$ | 0,014 | KW |
| Andere Dinge | | | | | | | |
| Kapazitätskontrolle | Variable | | | **Für Luft-Wasser-Komfortkühler; Luftdurchsatz, im Freien gemessen.** | - | 4500 | $m^3/h$ |
| Schallleistungspegel, innen/außen | LWA | -/61 | dB | Für Wasser/Sole-Wasser-Kaltwassersätze; Sole- oder Wassernenndurchfluss außenseitiger Wärmetauscher | - | N/A | $m^3/h$ |
| Emissionen von Stickoxiden (falls zutreffend) | NOx(**) | - | Mg/kWh Input GCV | | | | |
| GWP des Kältemittels | - | 675 | kg $CO_2$ eq (100 Jahre) | | | | |
| Verwendete Standardbewertungsbedingungen | Anwendung bei mittlerer Temperatur | | | | | | |
| Kontaktdetails | Siehe Rückseite des Handbuchs | | | | | | |

(**) Wenn Cdh nicht durch Messung bestimmt wird, muss der standardmäßige Degradationskoeffizient von Kühlern sein 0,9.

(**) Ab 26. September 2018.

# Informationspflichten für Komfortkühler

| | |
|---|---|
| Modell(s): | 12KW (Heizung 3 kW) ;12KW |
| Außenseitiger Wärmetauscher des Chillers | Luft zu Wasser |
| Innenseitiger Wärmetauscher-Kühler | Wasser |
| Typ: | Kompressorbetriebene Dampfkompression |
| Treiber für Kompressor | Elektromotor |

| Artikel | Symbol | Wert | Einheit | Artikel | Symbol | Wert | Einheit |
|---|---|---|---|---|---|---|---|
| **Nennwärmeleistung (*)** | $P_{rated .c}$ | 12 | kW | **Saisonale Raumheizungs-Energieeffizienz** | ηs,c | 201 | % |
| Angegebene Kühlkapazität für Teillast bei gegebener Außentemperatur $T_j$ | | | | Erklärter Energieeffizienzfaktor für Kühlung bei Teillast bei gegebener Außentemperatur $T_j$ | | | |
| Tj = + 35 °C | $P_{dc}$ | 11.6 | kW | Tj = +35 °C | EERd | 2.80 | - |
| Tj = + 30 °C | $P_{dc}$ | 8.7 | kW | Tj = + 30 °C | EERd | 4.34 | - |
| Tj = + 25 °C | $P_{dc}$ | 5.8 | kW | Tj = + 25 °C | EERd | 6.02 | - |
| Tj = + 20 °C | $P_{dc}$ | 2.6 | kW | Tj = + 20 °C | EERd | 6.46 | - |
| Verschlechterungskoeffizient des Kühlers (*) | $C_{dc}$ | 0.9 | kW | | | | |
| Stromverbrauch in anderen Modi als „aktiver Modus “ | | | | | | | |
| Aus-Modus | $P_{OFF}$ | 0,020 | kW | Kurbelgehäuseheizungsmodus | $P_{ck}$ | 0,000 | KW |
| Thermostat-Aus-Modus | $P_{TO}$ | 0,010 | kW | Standby Modus | $P_{SB}$ | 0,020 | KW |
| Andere Dinge | | | | | | | |
| Kapazitätskontrolle | Variable | | | **Für Luft-Wasser-Komfortkühler; Luftdurchsatz, im Freien gemessen.** | - | 5000 | $m^3/h$ |
| Schallleistungspegel, innen/außen | LWA | -/64 | dB | Für Wasser/Sole-Wasser-Kaltwassersätze; Sole- oder Wassernenndurchfluss außenseitiger Wärmetauscher | - | N/A | $m^3/h$ |
| Emissionen von Stickoxiden (falls zutreffend) | NOx(**) | - | Mg/kWh Input GCV | | | | |
| GWP des Kältemittels | - | 675 | kg $CO_2$ eq (100 Jahre) | | | | |
| Verwendete Standardbewertungsbedingungen | Anwendung bei niedrigen Temperaturen | | | | | | |
| Kontaktdetails | Siehe Rückseite des Handbuchs | | | | | | |

(**) Wenn Cdh nicht durch Messung bestimmt wird, muss der standardmäßige Degradationskoeffizient von Kühlern sein 0,9.

(**) Ab 26. September 2018.

# Informationspflichten für Komfortkühler

| | |
|---|---|
| Modell(s): | 12KW (Heizung 3 kW) ;12KW |
| Außenseitiger Wärmetauscher des Chillers | Luft zu Wasser |
| Innenseitiger Wärmetauscher-Kühler | Wasser |
| Typ: | Kompressorbetriebene Dampfkompression |
| Treiber für Kompressor | Elektromotor |

| Artikel | Symbol | Wert | Einheit | Artikel | Symbol | Wert | Einheit |
|---|---|---|---|---|---|---|---|
| **Nennwärmeleistung (*)** | $P_{rated .c}$ | 12 | kW | **Saisonale Raumheizungs-Energieeffizienz** | ηs,c | 295 | % |
| Angegebene Kühlkapazität für Teillast bei gegebener Außentemperatur $T_j$ | | | | Erklärter Energieeffizienzfaktor für Kühlung bei Teillast bei gegebener Außentemperatur $T_j$ | | | |
| Tj = + 35 °C | $P_{dc}$ | 12.0 | kW | Tj = +35 °C | EERd | 3.96 | - |
| Tj = + 30 °C | $P_{dc}$ | 9.3 | kW | Tj = + 30 °C | EERd | 6.16 | - |
| Tj = + 25 °C | $P_{dc}$ | 5.6 | kW | Tj = + 25 °C | EERd | 9.03 | - |
| Tj = + 20 °C | $P_{dc}$ | 3.5 | kW | Tj = + 20 °C | EERd | 10.04 | - |
| Verschlechterungskoeffizient des Kühlers (*) | $C_{dc}$ | 0.9 | kW | | | | |
| Stromverbrauch in anderen Modi als „aktiver Modus “ | | | | | | | |
| Aus-Modus | $P_{OFF}$ | 0,020 | kW | Kurbelgehäuseheizungsmodus | $P_{ck}$ | 0,000 | KW |
| Thermostat-Aus-Modus | $P_{TO}$ | 0,010 | kW | Standby Modus | $P_{SB}$ | 0,020 | KW |
| Andere Dinge | | | | | | | |
| Kapazitätskontrolle | Variable | | | **Für Luft-Wasser-Komfortkühler; Luftdurchsatz, im Freien gemessen.** | - | 5000 | $m^3/h$ |
| Schallleistungspegel, innen/außen | LWA | -/64 | dB | Für Wasser/Sole-Wasser-Kaltwassersätze; Sole- oder Wassernenndurchfluss außenseitiger Wärmetauscher | - | N/A | $m^3/h$ |
| Emissionen von Stickoxiden (falls zutreffend) | NOx(**) | - | Mg/kWh Input GCV | | | | |
| GWP des Kältemittels | - | 675 | kg $CO_2$ eq (100 Jahre) | | | | |
| Verwendete Standardbewertungsbedingungen | Anwendung bei mittlerer Temperatur | | | | | | |
| Kontaktdetails | Siehe Rückseite des Handbuchs | | | | | | |

(**) Wenn Cdh nicht durch Messung bestimmt wird, muss der standardmäßige Degradationskoeffizient von Kühlern sein 0,9.

(**) Ab 26. September 2018.

# Informationspflichten für Komfortkühler

| | |
|---|---|
| Modell(s): | 14KW (Heizung 3 kW) ;14KW |
| Außenseitiger Wärmetauscher des Chillers | Luft zu Wasser |
| Innenseitiger Wärmetauscher-Kühler | Wasser |
| Typ: | Kompressorbetriebene Dampfkompression |
| Treiber für Kompressor | Elektromotor |

| Artikel | Symbol | Wert | Einheit | Artikel | Symbol | Wert | Einheit |
|---|---|---|---|---|---|---|---|
| **Nennwärmeleistung (*)** | $P_{rated .c}$ | 13 | kW | **Saisonale Raumheizungs-Energieeffizienz** | ηs,c | 200 | % |
| Angegebene Kühlkapazität für Teillast bei gegebener Außentemperatur $T_j$ | | | | Erklärter Energieeffizienzfaktor für Kühlung bei Teillast bei gegebener Außentemperatur $T_j$ | | | |
| Tj = + 35 °C | $P_{dc}$ | 12.7 | kW | Tj = +35 °C | EERd | 2.59 | - |
| Tj = + 30 °C | $P_{dc}$ | 9.5 | kW | Tj = + 30 °C | EERd | 4.33 | - |
| Tj = + 25 °C | $P_{dc}$ | 6.3 | kW | Tj = + 25 °C | EERd | 6.08 | - |
| Tj = + 20 °C | $P_{dc}$ | 3.0 | kW | Tj = + 20 °C | EERd | 6.64 | - |
| Verschlechterungskoeffizient des Kühlers (*) | $C_{dc}$ | 0.9 | kW | | | | |
| Stromverbrauch in anderen Modi als „aktiver Modus “ | | | | | | | |
| Aus-Modus | $P_{OFF}$ | 0,020 | kW | Kurbelgehäuseheizungsmodus | $P_{ck}$ | 0,000 | KW |
| Thermostat-Aus-Modus | $P_{TO}$ | 0,010 | kW | Standby Modus | $P_{SB}$ | 0,020 | KW |
| Andere Dinge | | | | | | | |
| Kapazitätskontrolle | Variable | | | **Für Luft-Wasser-Komfortkühler; Luftdurchsatz, im Freien gemessen.** | - | 5500 | $m^3/h$ |
| Schallleistungspegel, innen/außen | LWA | -/66 | dB | Für Wasser/Sole-Wasser-Kaltwassersätze; Sole- oder Wassernenndurchfluss außenseitiger Wärmetauscher | - | N/A | $m^3/h$ |
| Emissionen von Stickoxiden (falls zutreffend) | NOx(**) | - | Mg/kWh Input GCV | | | | |
| GWP des Kältemittels | - | 675 | kg $CO_2$ eq (100 Jahre) | | | | |
| Verwendete Standardbewertungsbedingungen | Anwendung bei niedrigen Temperaturen | | | | | | |
| Kontaktdetails | Siehe Rückseite des Handbuchs | | | | | | |

(**) Wenn Cdh nicht durch Messung bestimmt wird, muss der standardmäßige Degradationskoeffizient von Kühlern sein 0,9.

(**) Ab 26. September 2018.

# Informationspflichten für Komfortkühler

| | |
|---|---|
| Modell(s): | 14KW (Heizung 3 kW) ;14KW |
| Außenseitiger Wärmetauscher des Chillers | Luft zu Wasser |
| Innenseitiger Wärmetauscher-Kühler | Wasser |
| Typ: | Kompressorbetriebene Dampfkompression |
| Treiber für Kompressor | Elektromotor |

| Artikel | Symbol | Wert | Einheit | Artikel | Symbol | Wert | Einheit |
|---|---|---|---|---|---|---|---|
| **Nennwärmeleistung (*)** | $P_{rated .c}$ | 14 | kW | **Saisonale Raumheizungs-Energieeffizienz** | ηs,c | 281 | % |
| Angegebene Kühlkapazität für Teillast bei gegebener Außentemperatur $T_j$ | | | | Erklärter Energieeffizienzfaktor für Kühlung bei Teillast bei gegebener Außentemperatur $T_j$ | | | |
| Tj = + 35 °C | $P_{dc}$ | 13.6 | kW | Tj = +35 °C | $EER_d$ | 3.73 | - |
| Tj = + 30 °C | $P_{dc}$ | 10.4 | kW | Tj = + 30 °C | $EER_d$ | 5.75 | - |
| Tj = + 25 °C | $P_{dc}$ | 6.6 | kW | Tj = + 25 °C | $EER_d$ | 8.58 | - |
| Tj = + 20 °C | $P_{dc}$ | 3.5 | kW | Tj = + 20 °C | $EER_d$ | 9.96 | - |
| Verschlechterungskoeffizient des Kühlers (*) | $C_{dc}$ | 0.9 | kW | | | | |
| Stromverbrauch in anderen Modi als „aktiver Modus “ | | | | | | | |
| Aus-Modus | $P_{OFF}$ | 0,020 | kW | Kurbelgehäuseheizungsmodus | $P_{ck}$ | 0.000 | KW |
| Thermostat-Aus-Modus | $P_{TO}$ | 0,010 | kW | Standby Modus | $P_{SB}$ | 0.020 | KW |
| Andere Dinge | | | | | | | |
| Kapazitätskontrolle | Variable | | | **Für Luft-Wasser-Komfortkühler; Luftdurchsatz, im Freien gemessen.** | - | 5500 | $m^3/h$ |
| Schallleistungspegel, innen/außen | LWA | -/66 | dB | Für Wasser/Sole-Wasser-Kaltwassersätze; Sole- oder Wassernenndurchfluss außenseitiger Wärmetauscher | - | N/A | $m^3/h$ |
| Emissionen von Stickoxiden (falls zutreffend) | NOx(**) | - | Mg/kWh Input GCV | | | | |
| GWP des Kältemittels | - | 675 | kg $CO_2$ eq (100 Jahre) | | | | |
| Verwendete Standardbewertungsbedingungen | Anwendung bei mittlerer Temperatur | | | | | | |
| Kontaktdetails | Siehe Rückseite des Handbuchs | | | | | | |

(**) Wenn Cdh nicht durch Messung bestimmt wird, muss der standardmäßige Degradationskoeffizient von Kühlern sein 0,9.

(**) Ab 26. September 2018.

# Informationspflichten für Komfortkühler

| | |
|---|---|
| Modell(s): | 16KW (Heizung 3 kW) ;16KW |
| Außenseitiger Wärmetauscher des Chillers | Luft zu Wasser |
| Innenseitiger Wärmetauscher-Kühler | Wasser |
| Typ: | Kompressorbetriebene Dampfkompression |
| Treiber für Kompressor | Elektromotor |

| Artikel | Symbol | Wert | Einheit | Artikel | Symbol | Wert | Einheit |
|---|---|---|---|---|---|---|---|
| **Nennwärmeleistung (*)** | $P_{rated .c}$ | 14 | kW | **Saisonale Raumheizungs-Energieeffizienz** | ηs,c | 192 | % |
| Angegebene Kühlkapazität für Teillast bei gegebener Außentemperatur $T_j$ | | | | Erklärter Energieeffizienzfaktor für Kühlung bei Teillast bei gegebener Außentemperatur $T_j$ | | | |
| Tj = + 35 °C | $P_{dc}$ | 14.3 | kW | Tj = +35 °C | $EER_d$ | 2.51 | - |
| Tj = + 30 °C | $P_{dc}$ | 10.6 | kW | Tj = + 30 °C | $EER_d$ | 3.70 | - |
| Tj = + 25 °C | $P_{dc}$ | 6.8 | kW | Tj = + 25 °C | $EER_d$ | 5.87 | - |
| Tj = + 20 °C | $P_{dc}$ | 3.5 | kW | Tj = + 20 °C | $EER_d$ | 7.23 | - |
| Verschlechterungskoeffizient des Kühlers (*) | $C_{dc}$ | 0.9 | kW | | | | |
| Stromverbrauch in anderen Modi als „aktiver Modus “ | | | | | | | |
| Aus-Modus | $P_{OFF}$ | 0,020 | kW | Kurbelgehäuseheizungsmodus | $P_{ck}$ | 0.000 | KW |
| Thermostat-Aus-Modus | $P_{TO}$ | 0,010 | kW | Standby Modus | $P_{SB}$ | 0.020 | KW |
| Andere Dinge | | | | | | | |
| Kapazitätskontrolle | Variable | | | **Für Luft-Wasser-Komfortkühler; Luftdurchsatz, im Freien gemessen.** | - | 6000 | $m^3/h$ |
| Schallleistungspegel, innen/außen | LWA | -/68 | dB | Für Wasser/Sole-Wasser-Kaltwassersätze; Sole- oder Wassernenndurchfluss außenseitiger Wärmetauscher | - | N/A | $m^3/h$ |
| Emissionen von Stickoxiden (falls zutreffend) | NOx(**) | - | Mg/kWh Input GCV | | | | |
| GWP des Kältemittels | - | 675 | kg $CO_2$ eq (100 Jahre) | | | | |
| Verwendete Standardbewertungsbedingungen | Anwendung bei niedrigen Temperaturen | | | | | | |
| Kontaktdetails | Siehe Rückseite des Handbuchs | | | | | | |

(**) Wenn Cdh nicht durch Messung bestimmt wird, muss der standardmäßige Degradationskoeffizient von Kühlern sein 0,9.

(**) Ab 26. September 2018.

# Informationspflichten für Komfortkühler

| | |
|---|---|
| Modell(s): | 16KW (Heizung 3 kW) ;16KW |
| Außenseitiger Wärmetauscher des Chillers | Luft zu Wasser |
| Innenseitiger Wärmetauscher-Kühler | Wasser |
| Typ: | Kompressorbetriebene Dampfkompression |
| Treiber für Kompressor | Elektromotor |

| Artikel | Symbol | Wert | Einheit | Artikel | Symbol | Wert | Einheit |
|---|---|---|---|---|---|---|---|
| **Nennwärmeleistung (*)** | $P_{rated .c}$ | 15 | kW | **Saisonale Raumheizungs-Energieeffizienz** | ηs,c | 280 | % |
| Angegebene Kühlkapazität für Teillast bei gegebener Außentemperatur $T_j$ | | | | Erklärter Energieeffizienzfaktor für Kühlung bei Teillast bei gegebener Außentemperatur $T_j$ | | | |
| Tj = + 35 °C | $P_{dc}$ | 15.4 | kW | Tj = +35 °C | $EER_d$ | 3.50 | - |
| Tj = + 30 °C | $P_{dc}$ | 11.6 | kW | Tj = + 30 °C | $EER_d$ | 5.45 | - |
| Tj = + 25 °C | $P_{dc}$ | 7.3 | kW | Tj = + 25 °C | $EER_d$ | 8.35 | - |
| Tj = + 20 °C | $P_{dc}$ | 4.6 | kW | Tj = + 20 °C | $EER_d$ | 11.68 | - |
| Verschlechterungskoeffizient des Kühlers (*) | $C_{dc}$ | 0.9 | kW | | | | |
| Stromverbrauch in anderen Modi als „aktiver Modus “ | | | | | | | |
| Aus-Modus | $P_{OFF}$ | 0.020 | kW | Kurbelgehäuseheizungsmodus | $P_{ck}$ | 0.000 | KW |
| Thermostat-Aus-Modus | $P_{TO}$ | 0.010 | kW | Standby Modus | $P_{SB}$ | 0.020 | KW |
| Andere Dinge | | | | | | | |
| Kapazitätskontrolle | Variable | | | **Für Luft-Wasser-Komfortkühler; Luftdurchsatz, im Freien gemessen.** | - | 6000 | $m^3/h$ |
| Schallleistungspegel, innen/außen | LWA | -/68 | dB | Für Wasser/Sole-Wasser-Kaltwassersätze; Sole- oder Wassernenndurchfluss außenseitiger Wärmetauscher | - | N/A | $m^3/h$ |
| Emissionen von Stickoxiden (falls zutreffend) | NOx(**) | - | Mg/kWh Input GCV | | | | |
| GWP des Kältemittels | - | 675 | kg $CO_2$ eq (100 Jahre) | | | | |
| Verwendete Standardbewertungsbedingungen | Anwendung bei mittlerer Temperatur | | | | | | |
| Kontaktdetails | Siehe Rückseite des Handbuchs | | | | | | |

(**) Wenn Cdh nicht durch Messung bestimmt wird, muss der standardmäßige Degradationskoeffizient von Kühlern sein 0,9.

(**) Ab 26. September 2018.

# Informationspflichten für Komfortkühler

| | |
|---|---|
| Modell(s): | 3-PH 12kW(Heizung 9kW);3-PH 12kW(Heizung 6kW); 3-PH 12kW(Heizung 3kW);3-PH 12kW |
| Außenseitiger Wärmetauscher des Chillers | Luft zu Wasser |
| Innenseitiger Wärmetauscher-Kühler | Wasser |
| Typ: | Kompressorbetriebene Dampfkompression |
| Treiber für Kompressor | Elektromotor |

| Artikel | Symbol | Wert | Einheit | Artikel | Symbol | Wert | Einheit |
|---|---|---|---|---|---|---|---|
| **Nennwärmeleistung (*)** | $P_{rated .c}$ | 12 | kW | **Saisonale Raumheizungs-Energieeffizienz** | ηs,c | 197 | % |
| Angegebene Kühlkapazität für Teillast bei gegebener Außentemperatur $T_j$ | | | | Erklärter Energieeffizienzfaktor für Kühlung bei Teillast bei gegebener Außentemperatur $T_j$ | | | |
| Tj = + 35 °C | $P_{dc}$ | 11.7 | kW | Tj = +35 °C | $EER_d$ | 2.64 | - |
| Tj = + 30 °C | $P_{dc}$ | 8.8 | kW | Tj = + 30 °C | $EER_d$ | 4.09 | - |
| Tj = + 25 °C | $P_{dc}$ | 5.9 | kW | Tj = + 25 °C | $EER_d$ | 5.58 | - |
| Tj = + 20 °C | $P_{dc}$ | 4.1 | kW | Tj = + 20 °C | $EER_d$ | 8.01 | - |
| Verschlechterungskoeffizient des Kühlers (*) | $C_{dc}$ | 0.9 | kW | | | | |
| Stromverbrauch in anderen Modi als „aktiver Modus “ | | | | | | | |
| Aus-Modus | $P_{OFF}$ | 0.020 | kW | Kurbelgehäuseheizungsmodus | $P_{ck}$ | 0.000 | KW |
| Thermostat-Aus-Modus | $P_{TO}$ | 0.010 | kW | Standby Modus | $P_{SB}$ | 0.014 | KW |
| Andere Dinge | | | | | | | |
| Kapazitätskontrolle | Variable | | | **Für Luft-Wasser-Komfortkühler; Luftdurchsatz, im Freien gemessen.** | - | 5000 | $m^3/h$ |
| Schallleistungspegel, innen/außen | LWA | -/64 | dB | Für Wasser/Sole-Wasser-Kaltwassersätze; Sole- oder Wassernenndurchfluss außenseitiger Wärmetauscher | - | N/A | $m^3/h$ |
| Emissionen von Stickoxiden (falls zutreffend) | NOx(**) | - | Mg/kWh Input GCV | | | | |
| GWP des Kältemittels | - | 675 | kg $CO_2$ eq (100 Jahre) | | | | |
| Verwendete Standardbewertungsbedingungen | Anwendung bei niedrigen Temperaturen | | | | | | |
| Kontaktdetails | Siehe Rückseite des Handbuchs | | | | | | |

(**) Wenn Cdh nicht durch Messung bestimmt wird, muss der standardmäßige Degradationskoeffizient von Kühlern sein 0,9.

(**) Ab 26. September 2018.

# Informationspflichten für Komfortkühler

| | |
|---|---|
| Modell(s): | 3-PH 12kW(Heizung 9kW);3-PH 12kW(Heizung 6kW); 3-PH 12kW(Heizung 3kW);3-PH 12kW |
| Außenseitiger Wärmetauscher des Chillers | Luft zu Wasser |
| Innenseitiger Wärmetauscher-Kühler | Wasser |
| Typ: | Kompressorbetriebene Dampfkompression |
| Treiber für Kompressor | Elektromotor |

| Artikel | Symbol | Wert | Einheit | Artikel | Symbol | Wert | Einheit |
|---|---|---|---|---|---|---|---|
| **Nennwärmeleistung (*)** | $P_{rated .c}$ | 12 | kW | **Saisonale Raumheizungs-Energieeffizienz** | ηs,c | 276 | % |
| Angegebene Kühlkapazität für Teillast bei gegebener Außentemperatur $T_j$ | | | | Erklärter Energieeffizienzfaktor für Kühlung bei Teillast bei gegebener Außentemperatur $T_j$ | | | |
| $Tj_{=}$ + 35 °C | $P_{dc}$ | 12.0 | kW | Tj = +35 °C | $EER_d$ | 3.91 | - |
| $Tj_{=}$ + 30 °C | $P_{dc}$ | 9.3 | kW | $Tj_{=}$ + 30 °C | $EER_d$ | 5.67 | - |
| $Tj_{=}$ + 25 °C | $P_{dc}$ | 5.7 | kW | $Tj_{=}$ + 25 °C | $EER_d$ | 7.98 | - |
| $Tj_{=}$ + 20 °C | $P_{dc}$ | 5.1 | kW | $Tj_{=}$ + 20 °C | $EER_d$ | 11.37 | - |
| Verschlechterungskoeffizient des Kühlers (*) | $C_{dc}$ | 0.9 | kW | | | | |
| Stromverbrauch in anderen Modi als „aktiver Modus “ | | | | | | | |
| Aus-Modus | $P_{OFF}$ | 0.014 | kW | Kurbelgehäuseheizungsmodus | $P_{ck}$ | 0.000 | KW |
| Thermostat-Aus-Modus | $P_{TO}$ | 0.024 | kW | Standby Modus | $P_{SB}$ | 0.014 | KW |
| Andere Dinge | | | | | | | |
| Kapazitätskontrolle | Variable | | | **Für Luft-Wasser-Komfortkühler; Luftdurchsatz, im Freien gemessen.** | - | 5000 | $m^3/h$ |
| Schallleistungspegel, innen/außen | LWA | -/64 | dB | Für Wasser/Sole-Wasser-Kaltwassersätze; Sole- oder Wassernenndurchfluss außenseitiger Wärmetauscher | - | N/A | $m^3/h$ |
| Emissionen von Stickoxiden (falls zutreffend) | NOx(**) | - | Mg/kWh Input GCV | | | | |
| GWP des Kältemittels | - | 675 | kg $CO_2$ eq (100 Jahre) | | | | |
| Verwendete Standardbewertungsbedingungen | Anwendung bei mittlerer Temperatur | | | | | | |
| Kontaktdetails | Siehe Rückseite des Handbuchs | | | | | | |

(**) Wenn Cdh nicht durch Messung bestimmt wird, muss der standardmäßige Degradationskoeffizient von Kühlern sein 0,9.

(**) Ab 26. September 2018.

# Informationspflichten für Komfortkühler

| | |
|---|---|
| Modell(s): | 3-PH 14kW(Heizung 9kW);3-PH 14kW(Heizung 6kW); 3-PH 14kW(Heizung 3kW);3-PH 14kW |
| Außenseitiger Wärmetauscher des Chillers | Luft zu Wasser |
| Innenseitiger Wärmetauscher-Kühler | Wasser |
| Typ: | Kompressorbetriebene Dampfkompression |
| Treiber für Kompressor | Elektromotor |

| Artikel | Symbol | Wert | Einheit | Artikel | Symbol | Wert | Einheit |
|---|---|---|---|---|---|---|---|
| **Nennwärmeleistung (*)** | $P_{rated .c}$ | 13 | kW | **Saisonale Raumheizungs-Energieeffizienz** | ηs,c | 188 | % |
| Angegebene Kühlkapazität für Teillast bei gegebener Außentemperatur $T_j$ | | | | Erklärter Energieeffizienzfaktor für Kühlung bei Teillast bei gegebener Außentemperatur $T_j$ | | | |
| Tj = + 35 °C | $P_{dc}$ | 12.7 | kW | Tj = +35 °C | $EER_d$ | 2.36 | - |
| Tj = + 30 °C | $P_{dc}$ | 9.5 | kW | Tj = + 30 °C | $EER_d$ | 4.07 | - |
| Tj = + 25 °C | $P_{dc}$ | 6.1 | kW | Tj = + 25 °C | $EER_d$ | 5.76 | - |
| Tj = + 20 °C | $P_{dc}$ | 2.8 | kW | Tj = + 20 °C | $EER_d$ | 6.05 | - |
| Verschlechterungskoeffizient des Kühlers (*) | $C_{dc}$ | 0.9 | kW | | | | |
| Stromverbrauch in anderen Modi als „aktiver Modus “ | | | | | | | |
| Aus-Modus | $P_{OFF}$ | 0.014 | kW | Kurbelgehäuseheizungsmodus | $P_{ck}$ | 0.000 | KW |
| Thermostat-Aus-Modus | $P_{TO}$ | 0.024 | kW | Standby Modus | $P_{SB}$ | 0.014 | KW |
| Andere Dinge | | | | | | | |
| Kapazitätskontrolle | Variable | | | **Für Luft-Wasser-Komfortkühler; Luftdurchsatz, im Freien gemessen.** | - | 5500 | $m^3/h$ |
| Schallleistungspegel, innen/außen | LWA | -/66 | dB | Für Wasser/Sole-Wasser-Kaltwassersätze; Sole- oder Wassernenndurchfluss außenseitiger Wärmetauscher | - | N/A | $m^3/h$ |
| Emissionen von Stickoxiden (falls zutreffend) | NOx(**) | - | Mg/kWh Input GCV | | | | |
| GWP des Kältemittels | - | 675 | kg $CO_2$ eq (100 Jahre) | | | | |
| Verwendete Standardbewertungsbedingungen | Anwendung bei niedrigen Temperaturen | | | | | | |
| Kontaktdetails | Siehe Rückseite des Handbuchs | | | | | | |

(**) Wenn Cdh nicht durch Messung bestimmt wird, muss der standardmäßige Degradationskoeffizient von Kühlern sein 0,9.

(**) Ab 26. September 2018.

# Informationspflichten für Komfortkühler

| | |
|---|---|
| Modell(s): | 3-PH 14kW(Heizung 9kW);3-PH 14kW(Heizung 6kW); 3-PH 14kW(Heizung 3kW);3-PH 14kW |
| Außenseitiger Wärmetauscher des Chillers | Luft zu Wasser |
| Innenseitiger Wärmetauscher-Kühler | Wasser |
| Typ: | Kompressorbetriebene Dampfkompression |
| Treiber für Kompressor | Elektromotor |

| Artikel | Symbol | Wert | Einheit | Artikel | Symbol | Wert | Einheit |
|---|---|---|---|---|---|---|---|
| **Nennwärmeleistung (*)** | $P_{rated .c}$ | 14 | kW | **Saisonale Raumheizungs-Energieeffizienz** | ηs,c | 269 | % |
| Angegebene Kühlkapazität für Teillast bei gegebener Außentemperatur $T_j$ | | | | Erklärter Energieeffizienzfaktor für Kühlung bei Teillast bei gegebener Außentemperatur $T_j$ | | | |
| $Tj_{=}$ + 35 °C | $P_{dc}$ | 13.5 | kW | Tj = +35 °C | $EER_d$ | 3.72 | - |
| $Tj_{=}$ + 30 °C | $P_{dc}$ | 10.3 | kW | $Tj_{=}$ + 30 °C | $EER_d$ | 5.51 | - |
| $Tj_{=}$ + 25 °C | $P_{dc}$ | 6.5 | kW | $Tj_{=}$ + 25 °C | $EER_d$ | 8.11 | - |
| $Tj_{=}$ + 20 °C | $P_{dc}$ | 3.4 | kW | $Tj_{=}$ + 20 °C | $EER_d$ | 9.49 | - |
| Verschlechterungskoeffizient des Kühlers (*) | $C_{dc}$ | 0.9 | kW | | | | |
| Stromverbrauch in anderen Modi als „aktiver Modus “ | | | | | | | |
| Aus-Modus | $P_{OFF}$ | 0.014 | kW | Kurbelgehäuseheizungsmodus | $P_{ck}$ | 0.000 | KW |
| Thermostat-Aus-Modus | $P_{TO}$ | 0.024 | kW | Standby Modus | $P_{SB}$ | 0.014 | KW |
| Andere Dinge | | | | | | | |
| Kapazitätskontrolle | Variable | | | **Für Luft-Wasser-Komfortkühler; Luftdurchsatz, im Freien gemessen.** | - | 5500 | $m^3/h$ |
| Schallleistungspegel, innen/außen | LWA | -/66 | dB | Für Wasser/Sole-Wasser-Kaltwassersätze; Sole- oder Wassernenndurchfluss außenseitiger Wärmetauscher | - | N/A | $m^3/h$ |
| Emissionen von Stickoxiden (falls zutreffend) | NOx(**) | - | Mg/kWh Input GCV | | | | |
| GWP des Kältemittels | - | 675 | kg $CO_2$ eq (100 Jahre) | | | | |
| Verwendete Standardbewertungsbedingungen | Anwendung bei mittlerer Temperatur | | | | | | |
| Kontaktdetails | Siehe Rückseite des Handbuchs | | | | | | |

(**) Wenn Cdh nicht durch Messung bestimmt wird, muss der standardmäßige Degradationskoeffizient von Kühlern sein 0,9.

(**) Ab 26. September 2018.

# Informationspflichten für Komfortkühler

| | |
|---|---|
| Modell(s): | 3-PH 16kW(Heizung 9kW);3-PH 16kW(Heizung 6kW); 3-PH 16kW(Heizung 3kW);3-PH 16kW |
| Außenseitiger Wärmetauscher des Chillers | Luft zu Wasser |
| Innenseitiger Wärmetauscher-Kühler | Wasser |
| Typ: | Kompressorbetriebene Dampfkompression |
| Treiber für Kompressor | Elektromotor |

| Artikel | Symbol | Wert | Einheit | Artikel | Symbol | Wert | Einheit |
|---|---|---|---|---|---|---|---|
| **Nennwärmeleistung (*)** | $P_{rated .c}$ | 14 | kW | **Saisonale Raumheizungs-Energieeffizienz** | ηs,c | 186 | % |
| Angegebene Kühlkapazität für Teillast bei gegebener Außentemperatur $T_j$ | | | | Erklärter Energieeffizienzfaktor für Kühlung bei Teillast bei gegebener Außentemperatur $T_j$ | | | |
| Tj = + 35 °C | $P_{dc}$ | 13.8 | kW | Tj = +35 °C | $EER_d$ | 2.41 | - |
| Tj = + 30 °C | $P_{dc}$ | 10.9 | kW | Tj = + 30 °C | $EER_d$ | 3.65 | - |
| Tj = + 25 °C | $P_{dc}$ | 6.9 | kW | Tj = + 25 °C | $EER_d$ | 5.60 | - |
| Tj = + 20 °C | $P_{dc}$ | 3.6 | kW | Tj = + 20 °C | $EER_d$ | 7.08 | - |
| Verschlechterungskoeffizient des Kühlers (*) | $C_{dc}$ | 0.9 | kW | | | | |
| Stromverbrauch in anderen Modi als „aktiver Modus “ | | | | | | | |
| Aus-Modus | $P_{OFF}$ | 0.014 | kW | Kurbelgehäuseheizungsmodus | $P_{ck}$ | 0.000 | KW |
| Thermostat-Aus-Modus | $P_{TO}$ | 0.024 | kW | Standby Modus | $P_{SB}$ | 0.014 | KW |
| Andere Dinge | | | | | | | |
| Kapazitätskontrolle | Variable | | | **Für Luft-Wasser-Komfortkühler; Luftdurchsatz, im Freien gemessen.** | - | 6000 | $m^3/h$ |
| Schallleistungspegel, innen/außen | LWA | -/68 | dB | Für Wasser/Sole-Wasser-Kaltwassersätze; Sole- oder Wassernenndurchfluss außenseitiger Wärmetauscher | - | N/A | $m^3/h$ |
| Emissionen von Stickoxiden (falls zutreffend) | NOx(**) | - | Mg/kWh Input GCV | | | | |
| GWP des Kältemittels | - | 675 | kg $CO_2$ eq (100 Jahre) | | | | |
| Verwendete Standardbewertungsbedingungen | Anwendung bei niedrigen Temperaturen | | | | | | |
| Kontaktdetails | Siehe Rückseite des Handbuchs | | | | | | |

(**) Wenn Cdh nicht durch Messung bestimmt wird, muss der standardmäßige Degradationskoeffizient von Kühlern sein 0,9.

(**) Ab 26. September 2018.

# Informationspflichten für Komfortkühler

| | |
|---|---|
| Modell(s): | 3-PH 16kW(Heizung 9kW);3-PH 16kW(Heizung 6kW);<br>3-PH 16kW(Heizung 3kW);3-PH 16kW |
| Außenseitiger Wärmetauscher des Chillers | Luft zu Wasser |
| Innenseitiger Wärmetauscher-Kühler | Wasser |
| Typ: | Kompressorbetriebene Dampfkompression |
| Treiber für Kompressor | Elektromotor |

| Artikel | Symbol | Wert | Einheit | Artikel | Symbol | Wert | Einheit |
|---|---|---|---|---|---|---|---|
| **Nennwärmeleistung (*)** | $P_{rated .c}$ | 16 | kW | **Saisonale Raumheizungs-Energieeffizienz** | $\eta_{s,c}$ | 263 | % |
| Angegebene Kühlkapazität für Teillast bei gegebener Außentemperatur $T_j$ | | | | Erklärter Energieeffizienzfaktor für Kühlung bei Teillast bei gegebener Außentemperatur $T_j$ | | | |
| $Tj_{=}$ + 35 °C | $P_{dc}$ | 15.5 | kW | Tj = +35 °C | $EER_d$ | 3.35 | - |
| $Tj_{=}$ + 30 °C | $P_{dc}$ | 11.6 | kW | $Tj_{=}$ + 30 °C | $EER_d$ | 4.90 | - |
| $Tj_{=}$ + 25 °C | $P_{dc}$ | 7.5 | kW | $Tj_{=}$ + 25 °C | $EER_d$ | 7.91 | - |
| $Tj_{=}$ + 20 °C | $P_{dc}$ | 5.1 | kW | $Tj_{=}$ + 20 °C | $EER_d$ | 11.29 | - |
| Verschlechterungskoeffizient des Kühlers (*) | $C_{dc}$ | 0.9 | kW | | | | |
| Stromverbrauch in anderen Modi als „aktiver Modus “ | | | | | | | |
| Aus-Modus | $P_{OFF}$ | 0.014 | kW | Kurbelgehäuseheizungsmodus | $P_{ck}$ | 0.000 | KW |
| Thermostat-Aus-Modus | $P_{TO}$ | 0.024 | kW | Standby Modus | $P_{SB}$ | 0.014 | KW |
| Andere Dinge | | | | | | | |
| Kapazitätskontrolle | Variable | | | **Für Luft-Wasser-Komfortkühler; Luftdurchsatz, im Freien gemessen.** | - | 6000 | $m^3/h$ |
| Schallleistungspegel, innen/außen | LWA | -/68 | dB | Für Wasser/Sole-Wasser-Kaltwassersätze; Sole- oder Wassernenndurchfluss außenseitiger Wärmetauscher | - | N/A | $m^3/h$ |
| Emissionen von Stickoxiden (falls zutreffend) | NOx(**) | - | Mg/kWh Input GCV | | | | |
| GWP des Kältemittels | - | 675 | kg $CO_2$ eq (100 Jahre) | | | | |
| Verwendete Standardbewertungsbedingungen | Anwendung bei mittlerer Temperatur | | | | | | |
| Kontaktdetails | Siehe Rückseite des Handbuchs | | | | | | |

(**) Wenn Cdh nicht durch Messung bestimmt wird, muss der standardmäßige Degradationskoeffizient von Kühlern sein 0,9.
(**) Ab 26. September 2018.

TCL

Ananda GmbH

Daimlerstr. 6

D-76185 Karlsruhe

Mail:info@ananda-trading.de

# TEKNİK VERİ KLAVUZU

## Hava-su Isı Pompası Sistemi Üçlü Termal Monoblok.

| | | | |
|---|---|---|---|
| 4kW | THML-4D/HBp-A | 3-PH 12kW | THML-12S/HBp-A |
| 4kW(ısınma 3kW) | THMLd-4D/3HBp-A | 3-PH 12kW(ısınma 3kW) | THMLd-12S/3HBp-A |
| 6kW | THML-6D/HBp-A | 3-PH 12kW(ısınma 6kW) | THMLd-12S/6HBp-A |
| 6kW(ısınma 3kW) | THMLd-6D/3HBp-A | 3-PH 12kW(ısınma 9kW) | THMLd-12S/9HBp-A |
| 8kW | THML-8D/HBp-A | 3-PH 14kW | THML-14S/HBp-A |
| 8kW(ısınma 3kW) | THMLd-8D/3HBp-A | 3-PH 14kW(ısınma 3kW) | THMLd-14S/3HBp-A |
| 10kW | THML-10D/HBp-A | 3-PH 14kW(ısınma 6kW) | THMLd-14S/6HBp-A |
| 10kW(ısınma 3kW) | THMLd-10D/3HBp-A | 3-PH 14kW(ısınma 9kW) | THMLd-14S/9HBp-A |
| 12kW | THML-12D/HBp-A | 3-PH 16kW | THML-16S/HBp-A |
| 12kW(ısınma 3kW) | THMLd-12D/3HBp-A | 3-PH 16kW(ısınma 3kW) | THMLd-16S/3HBp-A |
| 14kW | THML-14D/HBp-A | 3-PH 16kW(ısınma 6kW) | THMLd-16S/6HBp-A |
| 14kW(ısınma 3kW) | THMLd-14D/3HBp-A | 3-PH 16kW(ısınma 9kW) | THMLd-16S/9HBp-A |
| 16kW | THML-16D/HBp-A | | |
| 16kW(ısınma 3kW) | THMLd-16D/3HBp-A | | |

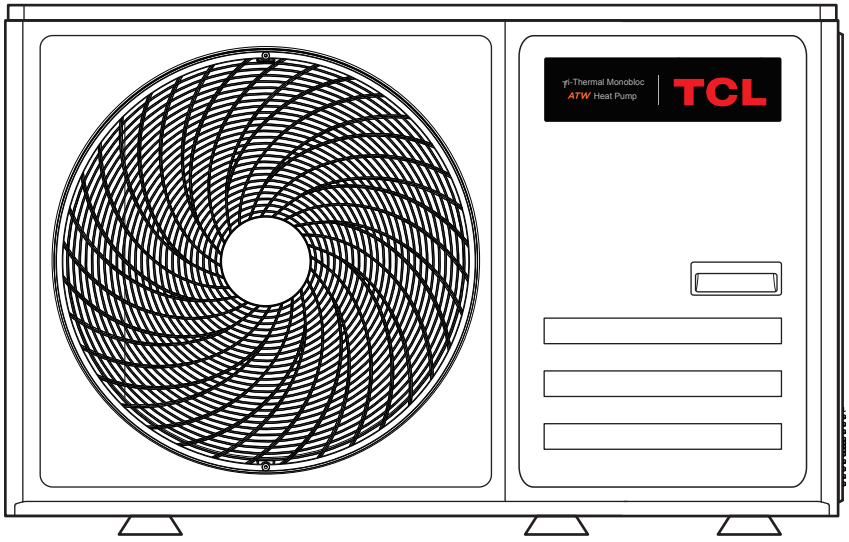


ÖNEMLİ NOT:

Ürünümüzü satın aldığınız için çok teşekkür ederiz:

Ürununüzü kullanmadan önce lütfen bu kılavuzu dikkatlice okuyun ve gelecekte başvurmak üzere saklayın.

# Teknik Özellikler

| | |
|---|---|
| Model | 4kW(ısınma 3kW);4kW |
| Hava-su ısı pompası | evet |
| Su-su ısı pompası | hayır |
| Tuzlu su-su ısı pompası | hayır |
| Düşük sıcaklık ısı pompası | hayır |
| İlave ısıtıcı ile donatılmış | evet (için 4kW(ısıtma 3kW))<br>hayır (için 4kW) |
| Isı pompası kombi ısıtıcı | hayır |
| Belirtilen iklim koşulu; | Ortalama |
| Parametreler düşük sıcaklık uygulaması için belirtilmiştir; | |

| ÖĞE | Sembol | DEĞER | BİRİM | ÖĞE | Sembol | DEĞER | BİRİM |
|---|---|---|---|---|---|---|---|
| **Nominal ısı çıkışı (*)** | Prated | 5.7 | kW | **Mevsimsel mekan ısıtma enerji verimliliği** | $\eta_s$ | 182 | % |
| İç mekan sıcaklığı 20 °C ve dış mekan sıcaklığında kısmi yükte ısıtma için belirtilen kapasite $T_j$ | | | | İç mekan sıcaklığı 20°C ve dış mekan sıcaklığında kısmi yükte belirtilen ısıtma kapasitesi $T_j$ | | | |
| $T_j$ = – 7°C | Prated | 5.1 | kW | $T_j$ = – 7°C | COPd | 2.82 | - |
| $T_j$ = + 2°C | $P_{dh}$ | 3.1 | kW | $T_j$ = + 2°C | COPd | 4.37 | - |
| $T_j$ = + 7°C | $P_{dh}$ | 2.1 | kW | $T_j$ = + 7°C | COPd | 6.57 | - |
| $T_j$ = + 12°C | $P_{dh}$ | 1.7 | kW | $T_j$ = + 12°C | COPd | 8.83 | - |
| $T_j$ = bivalent sıcaklık | $P_{dh}$ | 5.1 | kW | $T_j$ = bivalent sıcaklık | COPd | 2.82 | - |
| $T_j$ = işletme sınır sıcaklığı | $P_{dh}$ | 4.6 | kW | $T_j$ = işletme sınır sıcaklığı | COPd | 2.60 | - |
| Hava-su ısı pompaları için: $T_j$ = – 15°C (Eğer TOL < – 20°C) | $P_{dh}$ | N/A | kW | Hava-su ısı pompaları için: Tj = – 15°C (if TOL < – 20°C) | COPd | N/A | - |
| Bivalent sıcaklık | $T_{biv}$ | -7 | °C | Hava-su ısı pompaları için: İşletme sınır sıcaklığı | TOL | -10 | °C |
| Isıtma için devir aralığı yetenekliği | $P_{cych}$ | N/A | kW | Döngü aralığı verimliliği | $COP_{cyc}$ | N/A | - |
| Değer kaybı katsayısı (**) | $C_{dh}$ | 0.9 | kW | Isıtma suyu işletme sınır sıcaklığı | WTOL | 65 | °C |
| Active mod dışındaki modlarda güç tüketimi | | | | İlave ısıtıcı | | | |
| Kapalı mod | $P_{OFF}$ | 0.010 | kW | | | | |
| Termostat-kapalı mod | $P_{TO}$ | 0.010 | kW | Nominal ısı çıkışı (**) | $p_{sup}$ | 1.1 | kw |
| Bekleme modu | $P_{SB}$ | 0.010 | kW | Enerji giriş türü | Elektrik | | |
| Krank kasa ısıtıcı modu | $P_{CK}$ | 0.000 | kW | | | | |

| **Diğer öğeler** | | | | | | | |
|---|---|---|---|---|---|---|---|
| Kapasite kontrolü | değişken | | | Hava-su ısı pompaları için: Nominal hava akış hızı, dış mekan | - | 2600 | $m^3/h$ |
| İç/dış mekan ses güç seviyesi | $L_{WA}$ | -/56 | dB | Su veya tuzlu su ile çalışan ısı pompaları için: Nominal tuzlu su veya su akış hızı, dış mekan ısı değiştirici | - | N/A | $m^3/h$ |
| Yıllık enerji tüketimi | $Q_{HE}$ | 2559 | kWh | | | | |
| Isı pompası kombi ısıtıcı için: | | | | | | | |
| **Bildirilen yük profili** | N/A | | | **Su ısıtma enerji verimliliği** | $\eta_{wh}$ | N/A | % |
| Günlük elektrik tüketimi | $Q_{elec}$ | N/A | kWh | Günlük yakıt tüketimi | $Q_{fuel}$ | N/A | kWh |
| Yıllık elektrik tüketimi | AEC | N/A | kWh | Yıllık yakıt tüketimi | AFC | N/A | GJ |
| İletişim bilgileri | Kılavuzun arka kapağına bakınız. | | | | | | |

(*) Isı pompası mekan ısıtıcıları ve ısı pompası kombi ısıtıcıları için, nominal ısı çıkışı (Prated) ısıtma tasarım yüküne (Pdesignh) eşittir ve ilave ısıtıcının (Psup) nominal ısı çıkışı, ilave ısıtma kapasitesine (sup(Tj)) eşittir.
(**) Eğer Cdh ölçümle belirlenmemişse, varsayılan bozunma katsayısı Cdh = 0.9'dur.

# Teknik Özellikler

| | |
|---|---|
| Model | 4kW(ısınma 3kW);4kW |
| Hava-su ısı pompası | evet |
| Su-su ısı pompası | hayır |
| Tuzlu su-su ısı pompası | hayır |
| Düşük sıcaklık ısı pompası | hayır |
| İlave ısıtıcı ile donatılmış | evet (için 4kW(ısıtma 3kW))<br>hayır (için 4kW) |
| Isı pompası kombi ısıtıcı | hayır |
| Belirtilen iklim koşulu; | daha sıcak |
| Parametreler düşük sıcaklık uygulaması için belirtilmiştir; | |

| ÖĞE | Sembol | DEĞER | BİRİM | ÖĞE | Sembol | DEĞER | BİRİM |
|---|---|---|---|---|---|---|---|
| **Nominal ısı çıkışı (*)** | Prated | 5.3 | kW | **Mevsimsel mekan ısıtma enerji verimliliği** | $\eta_s$ | 264 | % |
| İç mekan sıcaklığı 20 °C ve dış mekan sıcaklığında kısmi yükte ısıtma için belirtilen kapasite $T_j$ | | | | İç mekan sıcaklığı 20°C ve dış mekan sıcaklığında kısmi yükte belirtilen ısıtma kapasitesi $T_j$ | | | |
| $T_j$ = – 7°C | Prated | N/A | kW | $T_j$ = – 7°C | COPd | N/A | - |
| $T_j$ = + 2°C | $P_{dh}$ | 5.3 | kW | $T_j$ = + 2°C | COPd | 3.39 | - |
| $T_j$ = + 7°C | $P_{dh}$ | 3.4 | kW | $T_j$ = + 7°C | COPd | 5.81 | - |
| $T_j$ = + 12°C | $P_{dh}$ | 1.7 | kW | $T_j$ = + 12°C | COPd | 8.62 | - |
| $T_j$ = bivalent sıcaklık | $P_{dh}$ | 3.4 | kW | $T_j$ = bivalent sıcaklık | COPd | 5.81 | - |
| $T_j$ = işletme sınır sıcaklığı | $P_{dh}$ | 5.3 | kW | $T_j$ = işletme sınır sıcaklığı | COPd | 3.39 | - |
| Hava-su ısı pompaları için: $T_j$ = – 15°C (Eğer TOL < – 20°C) | $P_{dh}$ | N/A | kW | Hava-su ısı pompaları için: Tj = – 15°C (if TOL < – 20°C) | COPd | N/A | - |
| Bivalent sıcaklık | $T_{biv}$ | 7 | °C | Hava-su ısı pompaları için: İşletme sınır sıcaklığı | TOL | 2 | °C |
| Isıtma için devir aralığı yetenekliği | $P_{cych}$ | N/A | kW | Döngü aralığı verimliliği | $COP_{cyc}$ | N/A | - |
| Değer kaybı katsayısı (**) | $C_{dh}$ | 0.9 | kW | Isıtma suyu işletme sınır sıcaklığı | WTOL | 65 | °C |
| Active mod dışındaki modlarda güç tüketimi | | | | İlave ısıtıcı | | | |
| Kapalı mod | $P_{OFF}$ | 0.010 | kW | | | | |
| Termostat-kapalı mod | $P_{TO}$ | 0.010 | kW | Nominal ısı çıkışı (**) | $p_{sup}$ | 0.0 | kw |
| Bekleme modu | $P_{SB}$ | 0.010 | kW | Enerji giriş türü | Elektrik | | |
| Krank kasa ısıtıcı modu | $P_{CK}$ | 0.000 | kW | | | | |

| **Diğer öğeler** | | | | | | | |
|---|---|---|---|---|---|---|---|
| Kapasite kontrolü | değişken | | | Hava-su ısı pompaları için: Nominal hava akış hızı, dış mekan | - | 2600 | $m^3/h$ |
| İç/dış mekan ses güç seviyesi | $L_{WA}$ | -/56 | dB | Su veya tuzlu su ile çalışan ısı pompaları için: Nominal tuzlu su veya su akış hızı, dış mekan ısı değiştirici | - | N/A | $m^3/h$ |
| Yıllık enerji tüketimi | $Q_{HE}$ | 1065 | kWh | | | | |
| Isı pompası kombi ısıtıcı için: | | | | | | | |
| **Bildirilen yük profili** | N/A | | | **Su ısıtma enerji verimliliği** | $\eta_{wh}$ | N/A | % |
| Günlük elektrik tüketimi | $Q_{elec}$ | N/A | kWh | Günlük yakıt tüketimi | $Q_{fuel}$ | N/A | kWh |
| Yıllık elektrik tüketimi | AEC | N/A | kWh | Yıllık yakıt tüketimi | AFC | N/A | GJ |
| İletişim bilgileri | Kılavuzun arka kapağına bakınız. | | | | | | |

(*) Isı pompası mekan ısıtıcıları ve ısı pompası kombi ısıtıcıları için, nominal ısı çıkışı (Prated) ısıtma tasarım yüküne (Pdesignh) eşittir ve ilave ısıtıcının (Psup) nominal ısı çıkışı, ilave ısıtma kapasitesine (sup(Tj)) eşittir.
(**) Eğer Cdh ölçümle belirlenmemişse, varsayılan bozunma katsayısı Cdh = 0.9'dur.

# Teknik Özellikler

| | |
|---|---|
| Model | 4kW(ısınma 3kW);4kW |
| Hava-su ısı pompası | evet |
| Su-su ısı pompası | hayır |
| Tuzlu su-su ısı pompası | hayır |
| Düşük sıcaklık ısı pompası | hayır |
| İlave ısıtıcı ile donatılmış | evet (için 4kW(ısıtma 3kW))<br>hayır (için 4kW) |
| Isı pompası kombi ısıtıcı | hayır |
| Belirtilen iklim koşulu; | daha soğuk |
| Parametreler düşük sıcaklık uygulaması için belirtilmiştir; | |

| ÖĞE | Sembol | DEĞER | BİRİM | ÖĞE | Sembol | DEĞER | BİRİM |
|---|---|---|---|---|---|---|---|
| **Nominal ısı çıkışı (*)** | Prated | 5.0 | kW | **Mevsimsel mekan ısıtma enerji verimliliği** | $\eta_s$ | 160 | % |
| İç mekan sıcaklığı 20 °C ve dış mekan sıcaklığında kısmi yükte ısıtma için belirtilen kapasite $T_j$ | | | | İç mekan sıcaklığı 20°C ve dış mekan sıcaklığında kısmi yükte belirtilen ısıtma kapasitesi $T_j$ | | | |
| $T_j$ = – 7°C | Prated | 3.0 | kW | $T_j$ = – 7°C | COPd | 3.45 | - |
| $T_j$ = + 2°C | $P_{dh}$ | 1.9 | kW | $T_j$ = + 2°C | COPd | 5.00 | - |
| $T_j$ = + 7°C | $P_{dh}$ | 1.2 | kW | $T_j$ = + 7°C | COPd | 5.73 | - |
| $T_j$ = + 12°C | $P_{dh}$ | 1.6 | kW | $T_j$ = + 12°C | COPd | 7.84 | - |
| $T_j$ = bivalent sıcaklık | $P_{dh}$ | 4.1 | kW | $T_j$ = bivalent sıcaklık | COPd | 2.51 | - |
| $T_j$ = işletme sınır sıcaklığı | $P_{dh}$ | 3.3 | kW | $T_j$ = işletme sınır sıcaklığı | COPd | 1.72 | - |
| Hava-su ısı pompaları için: $T_j$ = – 15°C (Eğer TOL < – 20°C) | $P_{dh}$ | N/A | kW | Hava-su ısı pompaları için: Tj = – 15°C (if TOL < – 20°C) | COPd | N/A | - |
| Bivalent sıcaklık | $T_{biv}$ | -15 | °C | Hava-su ısı pompaları için: İşletme sınır sıcaklığı | TOL | -22 | °C |
| Isıtma için devir aralığı yetenekliği | $P_{cych}$ | N/A | kW | Döngü aralığı verimliliği | $COP_{cyc}$ | N/A | - |
| Değer kaybı katsayısı (**) | $C_{dh}$ | 0.9 | kW | Isıtma suyu işletme sınır sıcaklığı | WTOL | 65 | °C |
| Active mod dışındaki modlarda güç tüketimi | | | | İlave ısıtıcı | | | |
| Kapalı mod | $P_{OFF}$ | 0.010 | kW | | | | |
| Termostat-kapalı mod | $P_{TO}$ | 0.010 | kW | Nominal ısı çıkışı (**) | $p_{sup}$ | 2.7 | kw |
| Bekleme modu | $P_{SB}$ | 0.010 | kW | Enerji giriş türü | Elektrik | | |
| Krank kasa ısıtıcı modu | $P_{CK}$ | 0.000 | kW | | | | |

| **Diğer öğeler** | | | | | | | |
|---|---|---|---|---|---|---|---|
| Kapasite kontrolü | değişken | | | Hava-su ısı pompaları için: Nominal hava akış hızı, dış mekan | - | 2600 | $m^3/h$ |
| İç/dış mekan ses güç seviyesi | $L_{WA}$ | -/56 | dB | Su veya tuzlu su ile çalışan ısı pompaları için: Nominal tuzlu su veya su akış hızı, dış mekan ısı değiştirici | - | N/A | $m^3/h$ |
| Yıllık enerji tüketimi | $Q_{HE}$ | 3038 | kWh | | | | |
| Isı pompası kombi ısıtıcı için: | | | | | | | |
| **Bildirilen yük profili** | N/A | | | **Su ısıtma enerji verimliliği** | $\eta_{wh}$ | N/A | % |
| Günlük elektrik tüketimi | $Q_{elec}$ | N/A | kWh | Günlük yakıt tüketimi | $Q_{fuel}$ | N/A | kWh |
| Yıllık elektrik tüketimi | AEC | N/A | kWh | Yıllık yakıt tüketimi | AFC | N/A | GJ |
| İletişim bilgileri | Kılavuzun arka kapağına bakınız. | | | | | | |

(*) Isı pompası mekan ısıtıcıları ve ısı pompası kombi ısıtıcıları için, nominal ısı çıkışı (Prated) ısıtma tasarım yüküne (Pdesignh) eşittir ve ilave ısıtıcının (Psup) nominal ısı çıkışı, ilave ısıtma kapasitesine (sup(Tj)) eşittir.
(**) Eğer Cdh ölçümle belirlenmemişse, varsayılan bozunma katsayısı Cdh = 0.9'dur.

# Teknik Özellikler

| | |
|---|---|
| Model | 4kW(ısınma 3kW);4kW |
| Hava-su ısı pompası | evet |
| Su-su ısı pompası | hayır |
| Tuzlu su-su ısı pompası | hayır |
| Düşük sıcaklık ısı pompası | hayır |
| İlave ısıtıcı ile donatılmış | evet (için 4kW(ısıtma 3kW))<br>hayır (için 4kW) |
| Isı pompası kombi ısıtıcı | hayır |
| Belirtilen iklim koşulu; | Ortalama |
| Parametreler orta sıcaklık uygulaması için belirtilmiştir. | |

| ÖĞE | Sembol | DEĞER | BİRİM | ÖĞE | Sembol | DEĞER | BİRİM |
|---|---|---|---|---|---|---|---|
| **Nominal ısı çıkışı (*)** | Prated | 4.7 | kW | **Mevsimsel mekan ısıtma enerji verimliliği** | $\eta_s$ | 131 | % |
| İç mekan sıcaklığı 20 °C ve dış mekan sıcaklığında kısmi yükte ısıtma için belirtilen kapasite $T_j$ | | | | İç mekan sıcaklığı 20°C ve dış mekan sıcaklığında kısmi yükte belirtilen ısıtma kapasitesi $T_j$ | | | |
| $T_j$ = – 7°C | Prated | 4.2 | kW | $T_j$ = – 7°C | COPd | 2.14 | - |
| $T_j$ = + 2°C | $P_{dh}$ | 2.5 | kW | $T_j$ = + 2°C | COPd | 3.26 | - |
| $T_j$ = + 7°C | $P_{dh}$ | 1.7 | kW | $T_j$ = + 7°C | COPd | 4.44 | - |
| $T_j$ = + 12°C | $P_{dh}$ | 1.4 | kW | $T_j$ = + 12°C | COPd | 5.54 | - |
| $T_j$ = bivalent sıcaklık | $P_{dh}$ | 4.2 | kW | $T_j$ = bivalent sıcaklık | COPd | 2.14 | - |
| $T_j$ = işletme sınır sıcaklığı | $P_{dh}$ | 3.7 | kW | $T_j$ = işletme sınır sıcaklığı | COPd | 1.72 | - |
| Hava-su ısı pompaları için: $T_j$ = – 15°C (Eğer TOL < – 20°C) | $P_{dh}$ | N/A | kW | Hava-su ısı pompaları için: Tj = – 15°C (if TOL < – 20°C) | COPd | N/A | - |
| Bivalent sıcaklık | $T_{biv}$ | -7 | °C | Hava-su ısı pompaları için: İşletme sınır sıcaklığı | TOL | -10 | °C |
| Isıtma için devir aralığı yetenekliği | $P_{cych}$ | N/A | kW | Döngü aralığı verimliliği | $COP_{cyc}$ | N/A | - |
| Değer kaybı katsayısı (**) | $C_{dh}$ | 0.9 | kW | Isıtma suyu işletme sınır sıcaklığı | WTOL | 65 | °C |
| Active mod dışındaki modlarda güç tüketimi | | | | İlave ısıtıcı | | | |
| Kapalı mod | $P_{OFF}$ | 0.010 | kW | | | | |
| Termostat-kapalı mod | $P_{TO}$ | 0.010 | kW | Nominal ısı çıkışı (**) | $p_{sup}$ | 1.0 | kw |
| Bekleme modu | $P_{SB}$ | 0.010 | kW | Enerji giriş türü | Elektrik | | |
| Krank kasa ısıtıcı modu | $P_{CK}$ | 0.000 | kW | | | | |

| | | | | | | | |
|---|---|---|---|---|---|---|---|
| **Diğer öğeler** | | | | | | | |
| Kapasite kontrolü | değişken | | | Hava-su ısı pompaları için: Nominal hava akış hızı, dış mekan | - | 2600 | $m^3/h$ |
| İç/dış mekan ses güç seviyesi | $L_{WA}$ | -/56 | dB | Su veya tuzlu su ile çalışan ısı pompaları için: Nominal tuzlu su veya su akış hızı, dış mekan ısı değiştirici | - | N/A | $m^3/h$ |
| Yıllık enerji tüketimi | $Q_{HE}$ | 2898 | kWh | | | | |
| Isı pompası kombi ısıtıcı için: | | | | | | | |
| **Bildirilen yük profili** | N/A | | | **Su ısıtma enerji verimliliği** | $\eta_{wh}$ | N/A | % |
| Günlük elektrik tüketimi | $Q_{elec}$ | N/A | kWh | Günlük yakıt tüketimi | $Q_{fuel}$ | N/A | kWh |
| Yıllık elektrik tüketimi | AEC | N/A | kWh | Yıllık yakıt tüketimi | AFC | N/A | GJ |
| İletişim bilgileri | Kılavuzun arka kapağına bakınız. | | | | | | |

(*) Isı pompası mekan ısıtıcıları ve ısı pompası kombi ısıtıcıları için, nominal ısı çıkışı (Prated) ısıtma tasarım yüküne (Pdesignh) eşittir ve ilave ısıtıcının (Psup) nominal ısı çıkışı, ilave ısıtma kapasitesine (sup(Tj)) eşittir.
(**) Eğer Cdh ölçümle belirlenmemişse, varsayılan bozunma katsayısı Cdh = 0.9'dur.

# Teknik Özellikler

| | |
|---|---|
| Model | 4kW(ısınma 3kW);4kW |
| Hava-su ısı pompası | evet |
| Su-su ısı pompası | hayır |
| Tuzlu su-su ısı pompası | hayır |
| Düşük sıcaklık ısı pompası | hayır |
| İlave ısıtıcı ile donatılmış | evet (için 4kW(ısıtma 3kW))<br>hayır (için 4kW) |
| Isı pompası kombi ısıtıcı | hayır |
| Belirtilen iklim koşulu; | daha sıcak |
| Parametreler orta sıcaklık uygulaması için belirtilmiştir. | |

| ÖĞE | Sembol | DEĞER | BİRİM | ÖĞE | Sembol | DEĞER | BİRİM |
|---|---|---|---|---|---|---|---|
| **Nominal ısı çıkışı (*)** | Prated | 5.0 | kW | **Mevsimsel mekan ısıtma enerji verimliliği** | $\eta_s$ | 165 | % |
| İç mekan sıcaklığı 20 °C ve dış mekan sıcaklığında kısmi yükte ısıtma için belirtilen kapasite $T_j$ | | | | İç mekan sıcaklığı 20°C ve dış mekan sıcaklığında kısmi yükte belirtilen ısıtma kapasitesi $T_j$ | | | |
| $T_j$ = – 7°C | Prated | N/A | kW | $T_j$ = – 7°C | COPd | N/A | - |
| $T_j$ = + 2°C | $P_{dh}$ | 5.0 | kW | $T_j$ = + 2°C | COPd | 2.31 | - |
| $T_j$ = + 7°C | $P_{dh}$ | 3.2 | kW | $T_j$ = + 7°C | COPd | 3.68 | - |
| $T_j$ = + 12°C | $P_{dh}$ | 1.5 | kW | $T_j$ = + 12°C | COPd | 5.21 | - |
| $T_j$ = bivalent sıcaklık | $P_{dh}$ | 3.2 | kW | $T_j$ = bivalent sıcaklık | COPd | 3.68 | - |
| $T_j$ = işletme sınır sıcaklığı | $P_{dh}$ | 5.0 | kW | $T_j$ = işletme sınır sıcaklığı | COPd | 2.31 | - |
| Hava-su ısı pompaları için: $T_j$ = – 15°C (Eğer TOL < – 20°C) | $P_{dh}$ | N/A | kW | Hava-su ısı pompaları için: Tj = – 15°C (if TOL < – 20°C) | COPd | N/A | - |
| Bivalent sıcaklık | $T_{biv}$ | 7 | °C | Hava-su ısı pompaları için: İşletme sınır sıcaklığı | TOL | 2 | °C |
| Isıtma için devir aralığı yetenekliği | $P_{cych}$ | N/A | kW | Döngü aralığı verimliliği | $COP_{cyc}$ | N/A | - |
| Değer kaybı katsayısı (**) | $C_{dh}$ | 0.9 | kW | Isıtma suyu işletme sınır sıcaklığı | WTOL | 65 | °C |
| Active mod dışındaki modlarda güç tüketimi | | | | İlave ısıtıcı | | | |
| Kapalı mod | $P_{OFF}$ | 0.010 | kW | | | | |
| Termostat-kapalı mod | $P_{TO}$ | 0.010 | kW | Nominal ısı çıkışı (**) | $p_{sup}$ | 0.0 | kw |
| Bekleme modu | $P_{SB}$ | 0.010 | kW | Enerji giriş türü | Elektrik | | |
| Krank kasa ısıtıcı modu | $P_{CK}$ | 0.000 | kW | | | | |

| | | | | | | | |
|---|---|---|---|---|---|---|---|
| **Diğer öğeler** | | | | | | | |
| Kapasite kontrolü | değişken | | | Hava-su ısı pompaları için: Nominal hava akış hızı, dış mekan | - | 2600 | $m^3/h$ |
| İç/dış mekan ses güç seviyesi | $L_{WA}$ | -/56 | dB | Su veya tuzlu su ile çalışan ısı pompaları için: Nominal tuzlu su veya su akış hızı, dış mekan ısı değiştirici | - | N/A | $m^3/h$ |
| Yıllık enerji tüketimi | $Q_{HE}$ | 1604 | kWh | | | | |
| Isı pompası kombi ısıtıcı için: | | | | | | | |
| **Bildirilen yük profili** | N/A | | | **Su ısıtma enerji verimliliği** | $\eta_{wh}$ | N/A | % |
| Günlük elektrik tüketimi | $Q_{elec}$ | N/A | kWh | Günlük yakıt tüketimi | $Q_{fuel}$ | N/A | kWh |
| Yıllık elektrik tüketimi | AEC | N/A | kWh | Yıllık yakıt tüketimi | AFC | N/A | GJ |
| İletişim bilgileri | Kılavuzun arka kapağına bakınız. | | | | | | |

(*) Isı pompası mekan ısıtıcıları ve ısı pompası kombi ısıtıcıları için, nominal ısı çıkışı (Prated) ısıtma tasarım yüküne (Pdesignh) eşittir ve ilave ısıtıcının (Psup) nominal ısı çıkışı, ilave ısıtma kapasitesine (sup(Tj)) eşittir.
(**) Eğer Cdh ölçümle belirlenmemişse, varsayılan bozunma katsayısı Cdh = 0.9'dur.

# Teknik Özellikler

| | |
|---|---|
| Model(s): | 4kW(ısınma 3kW);4kW |
| Hava-su ısı pompası | evet |
| Su-su ısı pompası | hayır |
| Tuzlu su-su ısı pompası | hayır |
| Düşük sıcaklık ısı pompası | hayır |
| İlave ısıtıcı ile donatılmış | evet (için 4kW(ısıtma 3kW))<br>hayır (için 4kW) |
| Isı pompası kombi ısıtıcı | hayır |
| Belirtilen iklim koşulu; | daha soğuk |
| Parametreler orta sıcaklık uygulaması için belirtilmiştir. | |

| ÖĞE | Sembol | DEĞER | BİRİM | ÖĞE | Sembol | DEĞER | BİRİM |
|---|---|---|---|---|---|---|---|
| **Nominal ısı çıkışı (*)** | Prated | 3.7 | kW | **Mevsimsel mekan ısıtma enerji verimliliği** | $\eta_s$ | 107 | % |
| İç mekan sıcaklığı 20 °C ve dış mekan sıcaklığında kısmi yükte ısıtma için belirtilen kapasite $T_j$ | | | | İç mekan sıcaklığı 20°C ve dış mekan sıcaklığında kısmi yükte belirtilen ısıtma kapasitesi $T_j$ | | | |
| $T_j$ = – 7°C | Prated | 2.3 | kW | $T_j$ = – 7°C | COPd | 2.34 | - |
| $T_j$ = + 2°C | $P_{dh}$ | 1.4 | kW | $T_j$ = + 2°C | COPd | 3.22 | - |
| $T_j$ = + 7°C | $P_{dh}$ | 1.6 | kW | $T_j$ = + 7°C | COPd | 4.58 | - |
| $T_j$ = + 12°C | $P_{dh}$ | 1.5 | kW | $T_j$ = + 12°C | COPd | 6.33 | - |
| $T_j$ = bivalent sıcaklık | $P_{dh}$ | 3.0 | kW | $T_j$ = bivalent sıcaklık | COPd | 1.69 | - |
| $T_j$ = işletme sınır sıcaklığı | $P_{dh}$ | 2.5 | kW | $T_j$ = işletme sınır sıcaklığı | COPd | 1.17 | - |
| Hava-su ısı pompaları için: $T_j$ = – 15°C (Eğer TOL < – 20°C) | $P_{dh}$ | N/A | kW | Hava-su ısı pompaları için: Tj = – 15°C (if TOL < – 20°C) | COPd | N/A | - |
| Bivalent sıcaklık | $T_{biv}$ | -15 | °C | Hava-su ısı pompaları için: İşletme sınır sıcaklığı | TOL | -22 | °C |
| Isıtma için devir aralığı yetenekliği | $P_{cych}$ | N/A | kW | Döngü aralığı verimliliği | $COP_{cyc}$ | N/A | - |
| Değer kaybı katsayısı (**) | $C_{dh}$ | 0.9 | kW | Isıtma suyu işletme sınır sıcaklığı | WTOL | 65 | °C |
| Active mod dışındaki modlarda güç tüketimi | | | | İlave ısıtıcı | | | |
| Kapalı mod | $P_{OFF}$ | 0.010 | kW | | | | |
| Termostat-kapalı mod | $P_{TO}$ | 0.010 | kW | Nominal ısı çıkışı (**) | $p_{sup}$ | 1.2 | kw |
| Bekleme modu | $P_{SB}$ | 0.010 | kW | Enerji giriş türü | Elektrik | | |
| Krank kasa ısıtıcı modu | $P_{CK}$ | 0.000 | kW | | | | |

| **Diğer öğeler** | | | | | | | |
|---|---|---|---|---|---|---|---|
| Kapasite kontrolü | değişken | | | Hava-su ısı pompaları için: Nominal hava akış hızı, dış mekan | - | 2600 | $m^3/h$ |
| İç/dış mekan ses güç seviyesi | $L_{WA}$ | -/56 | dB | Su veya tuzlu su ile çalışan ısı pompaları için: Nominal tuzlu su veya su akış hızı, dış mekan ısı değiştirici | - | N/A | $m^3/h$ |
| Yıllık enerji tüketimi | $Q_{HE}$ | 3308 | kWh | | | | |
| Isı pompası kombi ısıtıcı için: | | | | | | | |
| **Bildirilen yük profili** | N/A | | | **Su ısıtma enerji verimliliği** | $\eta_{wh}$ | N/A | % |
| Günlük elektrik tüketimi | $Q_{elec}$ | N/A | kWh | Günlük yakıt tüketimi | $Q_{fuel}$ | N/A | kWh |
| Yıllık elektrik tüketimi | AEC | N/A | kWh | Yıllık yakıt tüketimi | AFC | N/A | GJ |
| İletişim bilgileri | Kılavuzun arka kapağına bakınız. | | | | | | |

(*) Isı pompası mekan ısıtıcıları ve ısı pompası kombi ısıtıcıları için, nominal ısı çıkışı (Prated) ısıtma tasarım yüküne (Pdesignh) eşittir ve ilave ısıtıcının (Psup) nominal ısı çıkışı, ilave ısıtma kapasitesine (sup(Tj)) eşittir.
(**) Eğer Cdh ölçümle belirlenmemişse, varsayılan bozunma katsayısı Cdh = 0.9'dur.

# Teknik Özellikler

| | |
|---|---|
| Model(s): | 6kW(ısınma 3kW);6kW |
| Hava-su ısı pompası | evet |
| Su-su ısı pompası | hayır |
| Tuzlu su-su ısı pompası | hayır |
| Düşük sıcaklık ısı pompası | hayır |
| İlave ısıtıcı ile donatılmış | evet (için 6kW(ısıtma 3kW))<br>hayır (için 6kW) |
| Isı pompası kombi ısıtıcı | hayır |
| Belirtilen iklim koşulu; | Ortalama |
| Parametreler düşük sıcaklık uygulaması için belirtilmiştir; | |

| ÖĞE | Sembol | DEĞER | BİRİM | ÖĞE | Sembol | DEĞER | BİRİM |
|---|---|---|---|---|---|---|---|
| **Nominal ısı çıkışı (*)** | Prated | 7.0 | kW | **Mevsimsel mekan ısıtma enerji verimliliği** | $\eta_s$ | 182.7 | % |
| İç mekan sıcaklığı 20 °C ve dış mekan sıcaklığında kısmi yükte ısıtma için belirtilen kapasite $T_j$ | | | | İç mekan sıcaklığı 20°C ve dış mekan sıcaklığında kısmi yükte belirtilen ısıtma kapasitesi $T_j$ | | | |
| $T_j$ = – 7°C | Prated | 6.2 | kW | $T_j$ = – 7°C | COPd | 2.74 | - |
| $T_j$ = + 2°C | $P_{dh}$ | 3.6 | kW | $T_j$ = + 2°C | COPd | 4.39 | - |
| $T_j$ = + 7°C | $P_{dh}$ | 2.5 | kW | $T_j$ = + 7°C | COPd | 6.72 | - |
| $T_j$ = + 12°C | $P_{dh}$ | 1.4 | kW | $T_j$ = + 12°C | COPd | 8.13 | - |
| $T_j$ = bivalent sıcaklık | $P_{dh}$ | 6.2 | kW | $T_j$ = bivalent sıcaklık | COPd | 2.74 | - |
| $T_j$ = işletme sınır sıcaklığı | $P_{dh}$ | 6.0 | kW | $T_j$ = işletme sınır sıcaklığı | COPd | 2.55 | - |
| Hava-su ısı pompaları için: $T_j$ = – 15°C (Eğer TOL < – 20°C) | $P_{dh}$ | N/A | kW | Hava-su ısı pompaları için: Tj = – 15°C (if TOL < – 20°C) | COPd | N/A | - |
| Bivalent sıcaklık | $T_{biv}$ | -7 | °C | Hava-su ısı pompaları için: İşletme sınır sıcaklığı | TOL | -10 | °C |
| Isıtma için devir aralığı yetenekliği | $P_{cych}$ | N/A | kW | Döngü aralığı verimliliği | $COP_{cyc}$ | N/A | - |
| Değer kaybı katsayısı (**) | $C_{dh}$ | 0.9 | kW | Isıtma suyu işletme sınır sıcaklığı | WTOL | 65 | °C |
| Active mod dışındaki modlarda güç tüketimi | | | | İlave ısıtıcı | | | |
| Kapalı mod | $P_{OFF}$ | 0.010 | kW | | | | |
| Termostat-kapalı mod | $P_{TO}$ | 0.010 | kW | Nominal ısı çıkışı (**) | $p_{sup}$ | 1.0 | kw |
| Bekleme modu | $P_{SB}$ | 0.010 | kW | Enerji giriş türü | Elektrik | | |
| Krank kasa ısıtıcı modu | $P_{CK}$ | 0.000 | kW | | | | |

| **Diğer öğeler** | | | | | | | |
|---|---|---|---|---|---|---|---|
| Kapasite kontrolü | değişken | | | Hava-su ısı pompaları için: Nominal hava akış hızı, dış mekan | - | 2800 | $m^3/h$ |
| İç/dış mekan ses güç seviyesi | $L_{WA}$ | -/59 | dB | Su veya tuzlu su ile çalışan ısı pompaları için: Nominal tuzlu su veya su akış hızı, dış mekan ısı değiştirici | - | N/A | $m^3/h$ |
| Yıllık enerji tüketimi | $Q_{HE}$ | 3120 | kWh | | | | |
| Isı pompası kombi ısıtıcı için: | | | | | | | |
| **Bildirilen yük profili** | N/A | | | **Su ısıtma enerji verimliliği** | $\eta_{wh}$ | N/A | % |
| Günlük elektrik tüketimi | $Q_{elec}$ | N/A | kWh | Günlük yakıt tüketimi | $Q_{fuel}$ | N/A | kWh |
| Yıllık elektrik tüketimi | AEC | N/A | kWh | Yıllık yakıt tüketimi | AFC | N/A | GJ |
| İletişim bilgileri | Kılavuzun arka kapağına bakınız. | | | | | | |

(*) Isı pompası mekan ısıtıcıları ve ısı pompası kombi ısıtıcıları için, nominal ısı çıkışı (Prated) ısıtma tasarım yüküne (Pdesignh) eşittir ve ilave ısıtıcının (Psup) nominal ısı çıkışı, ilave ısıtma kapasitesine (sup(Tj)) eşittir.
(**) Eğer Cdh ölçümle belirlenmemişse, varsayılan bozunma katsayısı Cdh = 0.9'dur.

# Teknik Özellikler

| | |
|---|---|
| Model(s): | 6kW(ısınma 3kW);6kW |
| Hava-su ısı pompası | evet |
| Su-su ısı pompası | hayır |
| Tuzlu su-su ısı pompası | hayır |
| Düşük sıcaklık ısı pompası | hayır |
| İlave ısıtıcı ile donatılmış | evet (için 6kW(ısıtma 3kW))<br>hayır (için 6kW) |
| Isı pompası kombi ısıtıcı | hayır |
| Belirtilen iklim koşulu; | daha sıcak |
| Parametreler düşük sıcaklık uygulaması için belirtilmiştir; | |

| ÖĞE | Sembol | DEĞER | BİRİM | ÖĞE | Sembol | DEĞER | BİRİM |
|---|---|---|---|---|---|---|---|
| **Nominal ısı çıkışı (*)** | Prated | 6.0 | kW | **Mevsimsel mekan ısıtma enerji verimliliği** | $\eta_s$ | 264 | % |
| İç mekan sıcaklığı 20 °C ve dış mekan sıcaklığında kısmi yükte ısıtma için belirtilen kapasite $T_j$ | | | | İç mekan sıcaklığı 20°C ve dış mekan sıcaklığında kısmi yükte belirtilen ısıtma kapasitesi $T_j$ | | | |
| $T_j$ = – 7°C | Prated | N/A | kW | $T_j$ = – 7°C | COPd | N/A | - |
| $T_j$ = + 2°C | $P_{dh}$ | 5.9 | kW | $T_j$ = + 2°C | COPd | 3.49 | - |
| $T_j$ = + 7°C | $P_{dh}$ | 3.9 | kW | $T_j$ = + 7°C | COPd | 5.71 | - |
| $T_j$ = + 12°C | $P_{dh}$ | 2.0 | kW | $T_j$ = + 12°C | COPd | 8.78 | - |
| $T_j$ = bivalent sıcaklık | $P_{dh}$ | 3.9 | kW | $T_j$ = bivalent sıcaklık | COPd | 5.71 | - |
| $T_j$ = işletme sınır sıcaklığı | $P_{dh}$ | 5.9 | kW | $T_j$ = işletme sınır sıcaklığı | COPd | 3.49 | - |
| Hava-su ısı pompaları için: $T_j$ = – 15°C (Eğer TOL < – 20°C) | $P_{dh}$ | N/A | kW | Hava-su ısı pompaları için: Tj = – 15°C (if TOL < – 20°C) | COPd | N/A | - |
| Bivalent sıcaklık | $T_{biv}$ | 7 | °C | Hava-su ısı pompaları için: İşletme sınır sıcaklığı | TOL | 2 | °C |
| Isıtma için devir aralığı yetenekliği | $P_{cych}$ | N/A | kW | Döngü aralığı verimliliği | $COP_{cyc}$ | N/A | - |
| Değer kaybı katsayısı (**) | $C_{dh}$ | 0.9 | kW | Isıtma suyu işletme sınır sıcaklığı | WTOL | 65 | °C |
| Active mod dışındaki modlarda güç tüketimi | | | | İlave ısıtıcı | | | |
| Kapalı mod | $P_{OFF}$ | 0.010 | kW | | | | |
| Termostat-kapalı mod | $P_{TO}$ | 0.010 | kW | Nominal ısı çıkışı (**) | $p_{sup}$ | 0.1 | kw |
| Bekleme modu | $P_{SB}$ | 0.010 | kW | Enerji giriş türü | Elektrik | | |
| Krank kasa ısıtıcı modu | $P_{CK}$ | 0.000 | kW | | | | |

| | | | | | | | |
|---|---|---|---|---|---|---|---|
| **Diğer öğeler** | | | | | | | |
| Kapasite kontrolü | değişken | | | Hava-su ısı pompaları için: Nominal hava akış hızı, dış mekan | - | 2800 | $m^3/h$ |
| İç/dış mekan ses güç seviyesi | $L_{WA}$ | -/59 | dB | Su veya tuzlu su ile çalışan ısı pompaları için: Nominal tuzlu su veya su akış hızı, dış mekan ısı değiştirici | - | N/A | $m^3/h$ |
| Yıllık enerji tüketimi | $Q_{HE}$ | 1202 | kWh | | | | |
| Isı pompası kombi ısıtıcı için: | | | | | | | |
| **Bildirilen yük profili** | N/A | | | **Su ısıtma enerji verimliliği** | $\eta_{wh}$ | N/A | % |
| Günlük elektrik tüketimi | $Q_{elec}$ | N/A | kWh | Günlük yakıt tüketimi | $Q_{fuel}$ | N/A | kWh |
| Yıllık elektrik tüketimi | AEC | N/A | kWh | Yıllık yakıt tüketimi | AFC | N/A | GJ |
| İletişim bilgileri | Kılavuzun arka kapağına bakınız. | | | | | | |

(*) Isı pompası mekan ısıtıcıları ve ısı pompası kombi ısıtıcıları için, nominal ısı çıkışı (Prated) ısıtma tasarım yüküne (Pdesignh) eşittir ve ilave ısıtıcının (Psup) nominal ısı çıkışı, ilave ısıtma kapasitesine (sup(Tj)) eşittir.
(**) Eğer Cdh ölçümle belirlenmemişse, varsayılan bozunma katsayısı Cdh = 0.9'dur.

# Teknik Özellikler

| | |
|---|---|
| Model(s): | 6kW(ısınma 3kW);6kW |
| Hava-su ısı pompası | evet |
| Su-su ısı pompası | hayır |
| Tuzlu su-su ısı pompası | hayır |
| Düşük sıcaklık ısı pompası | hayır |
| İlave ısıtıcı ile donatılmış | evet (için 6kW(ısıtma 3kW))<br>hayır (için 6kW) |
| Isı pompası kombi ısıtıcı | hayır |
| Belirtilen iklim koşulu; | daha soğuk |
| Parametreler düşük sıcaklık uygulaması için belirtilmiştir; | |

| ÖĞE | Sembol | DEĞER | BİRİM | ÖĞE | Sembol | DEĞER | BİRİM |
|---|---|---|---|---|---|---|---|
| **Nominal ısı çıkışı (*)** | Prated | 6.0 | kW | **Mevsimsel mekan ısıtma enerji verimliliği** | $\eta_s$ | 166 | % |
| İç mekan sıcaklığı 20 °C ve dış mekan sıcaklığında kısmi yükte ısıtma için belirtilen kapasite $T_j$ | | | | İç mekan sıcaklığı 20°C ve dış mekan sıcaklığında kısmi yükte belirtilen ısıtma kapasitesi $T_j$ | | | |
| $T_j$ = – 7°C | Prated | 3.6 | kW | $T_j$ = – 7°C | COPd | 3.51 | - |
| $T_j$ = + 2°C | $P_{dh}$ | 2.2 | kW | $T_j$ = + 2°C | COPd | 5.36 | - |
| $T_j$ = + 7°C | $P_{dh}$ | 1.5 | kW | $T_j$ = + 7°C | COPd | 6.66 | - |
| $T_j$ = + 12°C | $P_{dh}$ | 1..6 | kW | $T_j$ = + 12°C | COPd | 7.97 | - |
| $T_j$ = bivalent sıcaklık | $P_{dh}$ | 4.9 | kW | $T_j$ = bivalent sıcaklık | COPd | 2.39 | - |
| $T_j$ = işletme sınır sıcaklığı | $P_{dh}$ | 3.6 | kW | $T_j$ = işletme sınır sıcaklığı | COPd | 1.78 | - |
| Hava-su ısı pompaları için: $T_j$ = – 15°C (Eğer TOL < – 20°C) | $P_{dh}$ | N/A | kW | Hava-su ısı pompaları için: Tj = – 15°C (if TOL < – 20°C) | COPd | N/A | - |
| Bivalent sıcaklık | $T_{biv}$ | -15 | °C | Hava-su ısı pompaları için: İşletme sınır sıcaklığı | TOL | -22 | °C |
| Isıtma için devir aralığı yetenekliği | $P_{cych}$ | N/A | kW | Döngü aralığı verimliliği | $COP_{cyc}$ | N/A | - |
| Değer kaybı katsayısı (**) | $C_{dh}$ | 0.9 | kW | Isıtma suyu işletme sınır sıcaklığı | WTOL | 65 | °C |
| Active mod dışındaki modlarda güç tüketimi | | | | İlave ısıtıcı | | | |
| Kapalı mod | $P_{OFF}$ | 0.010 | kW | | | | |
| Termostat-kapalı mod | $P_{TO}$ | 0.010 | kW | Nominal ısı çıkışı (**) | $p_{sup}$ | 2.4 | kw |
| Bekleme modu | $P_{SB}$ | 0.010 | kW | Enerji giriş türü | Elektrik | | |
| Krank kasa ısıtıcı modu | $P_{CK}$ | 0.000 | kW | | | | |

| **Diğer öğeler** | | | | | | | |
|---|---|---|---|---|---|---|---|
| Kapasite kontrolü | değişken | | | Hava-su ısı pompaları için: Nominal hava akış hızı, dış mekan | - | 2800 | $m^3/h$ |
| İç/dış mekan ses güç seviyesi | $L_{WA}$ | -/59 | dB | Su veya tuzlu su ile çalışan ısı pompaları için: Nominal tuzlu su veya su akış hızı, dış mekan ısı değiştirici | - | N/A | $m^3/h$ |
| Yıllık enerji tüketimi | $Q_{HE}$ | 3515 | kWh | | | | |
| Isı pompası kombi ısıtıcı için: | | | | | | | |
| **Bildirilen yük profili** | N/A | | | **Su ısıtma enerji verimliliği** | $\eta_{wh}$ | N/A | % |
| Günlük elektrik tüketimi | $Q_{elec}$ | N/A | kWh | Günlük yakıt tüketimi | $Q_{fuel}$ | N/A | kWh |
| Yıllık elektrik tüketimi | AEC | N/A | kWh | Yıllık yakıt tüketimi | AFC | N/A | GJ |
| İletişim bilgileri | Kılavuzun arka kapağına bakınız. | | | | | | |

(*) Isı pompası mekan ısıtıcıları ve ısı pompası kombi ısıtıcıları için, nominal ısı çıkışı (Prated) ısıtma tasarım yüküne (Pdesignh) eşittir ve ilave ısıtıcının (Psup) nominal ısı çıkışı, ilave ısıtma kapasitesine (sup(Tj)) eşittir.
(**) Eğer Cdh ölçümle belirlenmemişse, varsayılan bozunma katsayısı Cdh = 0.9'dur.

# Teknik Özellikler

| | |
|---|---|
| Model(s): | 6kW(ısınma 3kW);6kW |
| Hava-su ısı pompası | evet |
| Su-su ısı pompası | hayır |
| Tuzlu su-su ısı pompası | hayır |
| Düşük sıcaklık ısı pompası | hayır |
| İlave ısıtıcı ile donatılmış | evet (için 6kW(ısıtma 3kW))<br>hayır (için 6kW) |
| Isı pompası kombi ısıtıcı | hayır |
| Belirtilen iklim koşulu; | Ortalama |
| Parametreler orta sıcaklık uygulaması için belirtilmiştir. | |

| ÖĞE | Sembol | DEĞER | BİRİM | ÖĞE | Sembol | DEĞER | BİRİM |
|---|---|---|---|---|---|---|---|
| **Nominal ısı çıkışı (*)** | Prated | 6.0 | kW | **Mevsimsel mekan ısıtma enerji verimliliği** | $\eta_s$ | 137 | % |
| İç mekan sıcaklığı 20 °C ve dış mekan sıcaklığında kısmi yükte ısıtma için belirtilen kapasite $T_j$ | | | | İç mekan sıcaklığı 20°C ve dış mekan sıcaklığında kısmi yükte belirtilen ısıtma kapasitesi $T_j$ | | | |
| $T_j$ = – 7°C | Prated | 5.3 | kW | $T_j$ = – 7°C | COPd | 2.12 | - |
| $T_j$ = + 2°C | $P_{dh}$ | 3.2 | kW | $T_j$ = + 2°C | COPd | 3.43 | - |
| $T_j$ = + 7°C | $P_{dh}$ | 2.1 | kW | $T_j$ = + 7°C | COPd | 4.63 | - |
| $T_j$ = + 12°C | $P_{dh}$ | 1.4 | kW | $T_j$ = + 12°C | COPd | 5.70 | - |
| $T_j$ = bivalent sıcaklık | $P_{dh}$ | 5.3 | kW | $T_j$ = bivalent sıcaklık | COPd | 2.12 | - |
| $T_j$ = işletme sınır sıcaklığı | $P_{dh}$ | 5.0 | kW | $T_j$ = işletme sınır sıcaklığı | COPd | 1.81 | - |
| Hava-su ısı pompaları için: $T_j$ = – 15°C (Eğer TOL < – 20°C) | $P_{dh}$ | N/A | kW | Hava-su ısı pompaları için: Tj = – 15°C (if TOL < – 20°C) | COPd | N/A | - |
| Bivalent sıcaklık | $T_{biv}$ | -7 | °C | Hava-su ısı pompaları için: İşletme sınır sıcaklığı | TOL | -10 | °C |
| Isıtma için devir aralığı yetenekliği | $P_{cych}$ | N/A | kW | Döngü aralığı verimliliği | $COP_{cyc}$ | N/A | - |
| Değer kaybı katsayısı (**) | $C_{dh}$ | 0.9 | kW | Isıtma suyu işletme sınır sıcaklığı | WTOL | 65 | °C |
| Active mod dışındaki modlarda güç tüketimi | | | | İlave ısıtıcı | | | |
| Kapalı mod | $P_{OFF}$ | 0.010 | kW | | | | |
| Termostat-kapalı mod | $P_{TO}$ | 0.010 | kW | Nominal ısı çıkışı (**) | $p_{sup}$ | 1.0 | kw |
| Bekleme modu | $P_{SB}$ | 0.010 | kW | Enerji giriş türü | Elektrik | | |
| Krank kasa ısıtıcı modu | $P_{CK}$ | 0.000 | kW | | | | |

| **Diğer öğeler** | | | | | | | |
|---|---|---|---|---|---|---|---|
| Kapasite kontrolü | değişken | | | Hava-su ısı pompaları için: Nominal hava akış hızı, dış mekan | - | 2800 | $m^3/h$ |
| İç/dış mekan ses güç seviyesi | $L_{WA}$ | -/59 | dB | Su veya tuzlu su ile çalışan ısı pompaları için: Nominal tuzlu su veya su akış hızı, dış mekan ısı değiştirici | - | N/A | $m^3/h$ |
| Yıllık enerji tüketimi | $Q_{HE}$ | 3557 | kWh | | | | |
| Isı pompası kombi ısıtıcı için: | | | | | | | |
| **Bildirilen yük profili** | N/A | | | **Su ısıtma enerji verimliliği** | $\eta_{wh}$ | N/A | % |
| Günlük elektrik tüketimi | $Q_{elec}$ | N/A | kWh | Günlük yakıt tüketimi | $Q_{fuel}$ | N/A | kWh |
| Yıllık elektrik tüketimi | AEC | N/A | kWh | Yıllık yakıt tüketimi | AFC | N/A | GJ |
| İletişim bilgileri | Kılavuzun arka kapağına bakınız. | | | | | | |

(*) Isı pompası mekan ısıtıcıları ve ısı pompası kombi ısıtıcıları için, nominal ısı çıkışı (Prated) ısıtma tasarım yüküne (Pdesignh) eşittir ve ilave ısıtıcının (Psup) nominal ısı çıkışı, ilave ısıtma kapasitesine (sup(Tj)) eşittir.
(**) Eğer Cdh ölçümle belirlenmemişse, varsayılan bozunma katsayısı Cdh = 0.9'dur.

# Teknik Özellikler

| | |
|---|---|
| Model(s): | 6kW(ısınma 3kW);6kW |
| Hava-su ısı pompası | evet |
| Su-su ısı pompası | hayır |
| Tuzlu su-su ısı pompası | hayır |
| Düşük sıcaklık ısı pompası | hayır |
| İlave ısıtıcı ile donatılmış | evet (için 6kW(ısıtma 3kW))<br>hayır (için 6kW) |
| Isı pompası kombi ısıtıcı | hayır |
| Belirtilen iklim koşulu; | daha sıcak |
| Parametreler orta sıcaklık uygulaması için belirtilmiştir. | |

| ÖĞE | Sembol | DEĞER | BİRİM | ÖĞE | Sembol | DEĞER | BİRİM |
|---|---|---|---|---|---|---|---|
| **Nominal ısı çıkışı (*)** | Prated | 5.0 | kW | **Mevsimsel mekan ısıtma enerji verimliliği** | $\eta_s$ | 167 | % |
| İç mekan sıcaklığı 20 °C ve dış mekan sıcaklığında kısmi yükte ısıtma için belirtilen kapasite $T_j$ | | | | İç mekan sıcaklığı 20°C ve dış mekan sıcaklığında kısmi yükte belirtilen ısıtma kapasitesi $T_j$ | | | |
| $T_j$ = – 7°C | Prated | N/A | kW | $T_j$ = – 7°C | COPd | N/A | - |
| $T_j$ = + 2°C | $P_{dh}$ | 5.0 | kW | $T_j$ = + 2°C | COPd | 2.37 | - |
| $T_j$ = + 7°C | $P_{dh}$ | 3.2 | kW | $T_j$ = + 7°C | COPd | 3.72 | - |
| $T_j$ = + 12°C | $P_{dh}$ | 1.6 | kW | $T_j$ = + 12°C | COPd | 5.41 | - |
| $T_j$ = bivalent sıcaklık | $P_{dh}$ | 3.2 | kW | $T_j$ = bivalent sıcaklık | COPd | 3.72 | - |
| $T_j$ = işletme sınır sıcaklığı | $P_{dh}$ | 5.0 | kW | $T_j$ = işletme sınır sıcaklığı | COPd | 2.37 | - |
| Hava-su ısı pompaları için: $T_j$ = – 15°C (Eğer TOL < – 20°C) | $P_{dh}$ | N/A | kW | Hava-su ısı pompaları için: Tj = – 15°C (if TOL < – 20°C) | COPd | N/A | - |
| Bivalent sıcaklık | $T_{biv}$ | 7 | °C | Hava-su ısı pompaları için: İşletme sınır sıcaklığı | TOL | 2 | °C |
| Isıtma için devir aralığı yetenekliği | $P_{cych}$ | N/A | kW | Döngü aralığı verimliliği | $COP_{cyc}$ | N/A | - |
| Değer kaybı katsayısı (**) | $C_{dh}$ | 0.9 | kW | Isıtma suyu işletme sınır sıcaklığı | WTOL | 65 | °C |
| Active mod dışındaki modlarda güç tüketimi | | | | İlave ısıtıcı | | | |
| Kapalı mod | $P_{OFF}$ | 0.010 | kW | | | | |
| Termostat-kapalı mod | $P_{TO}$ | 0.010 | kW | Nominal ısı çıkışı (**) | $p_{sup}$ | 0.0 | kw |
| Bekleme modu | $P_{SB}$ | 0.010 | kW | Enerji giriş türü | Elektrik | | |
| Krank kasa ısıtıcı modu | $P_{CK}$ | 0.000 | kW | | | | |

| **Diğer öğeler** | | | | | | | |
|---|---|---|---|---|---|---|---|
| Kapasite kontrolü | değişken | | | Hava-su ısı pompaları için: Nominal hava akış hızı, dış mekan | - | 2800 | $m^3/h$ |
| İç/dış mekan ses güç seviyesi | $L_{WA}$ | -/59 | dB | Su veya tuzlu su ile çalışan ısı pompaları için: Nominal tuzlu su veya su akış hızı, dış mekan ısı değiştirici | - | N/A | $m^3/h$ |
| Yıllık enerji tüketimi | $Q_{HE}$ | 1508 | kWh | | | | |
| Isı pompası kombi ısıtıcı için: | | | | | | | |
| **Bildirilen yük profili** | N/A | | | **Su ısıtma enerji verimliliği** | $\eta_{wh}$ | N/A | % |
| Günlük elektrik tüketimi | $Q_{elec}$ | N/A | kWh | Günlük yakıt tüketimi | $Q_{fuel}$ | N/A | kWh |
| Yıllık elektrik tüketimi | AEC | N/A | kWh | Yıllık yakıt tüketimi | AFC | N/A | GJ |
| İletişim bilgileri | Kılavuzun arka kapağına bakınız. | | | | | | |

(*) Isı pompası mekan ısıtıcıları ve ısı pompası kombi ısıtıcıları için, nominal ısı çıkışı (Prated) ısıtma tasarım yüküne (Pdesignh) eşittir ve ilave ısıtıcının (Psup) nominal ısı çıkışı, ilave ısıtma kapasitesine (sup(Tj)) eşittir.
(**) Eğer Cdh ölçümle belirlenmemişse, varsayılan bozunma katsayısı Cdh = 0.9'dur.

# Teknik Özellikler

| | |
|---|---|
| Model(s): | 6kW(ısınma 3kW);6kW |
| Hava-su ısı pompası | evet |
| Su-su ısı pompası | hayır |
| Tuzlu su-su ısı pompası | hayır |
| Düşük sıcaklık ısı pompası | hayır |
| İlave ısıtıcı ile donatılmış | evet (için 6kW(ısıtma 3kW))<br>hayır (için 6kW) |
| Isı pompası kombi ısıtıcı | hayır |
| Belirtilen iklim koşulu; | daha soğuk |
| Parametreler orta sıcaklık uygulaması için belirtilmiştir. | |

| ÖĞE | Sembol | DEĞER | BİRİM | ÖĞE | Sembol | DEĞER | BİRİM |
|---|---|---|---|---|---|---|---|
| **Nominal ısı çıkışı (*)** | Prated | 5.0 | kW | **Mevsimsel mekan ısıtma enerji verimliliği** | $\eta_s$ | 113 | % |
| İç mekan sıcaklığı 20 °C ve dış mekan sıcaklığında kısmi yükte ısıtma için belirtilen kapasite $T_j$ | | | | İç mekan sıcaklığı 20°C ve dış mekan sıcaklığında kısmi yükte belirtilen ısıtma kapasitesi $T_j$ | | | |
| $T_j$ = – 7°C | Prated | 3.1 | kW | $T_j$ = – 7°C | COPd | 2.49 | - |
| $T_j$ = + 2°C | $P_{dh}$ | 1.8 | kW | $T_j$ = + 2°C | COPd | 3.52 | - |
| $T_j$ = + 7°C | $P_{dh}$ | 1.2 | kW | $T_j$ = + 7°C | COPd | 4.10 | - |
| $T_j$ = + 12°C | $P_{dh}$ | 1.4 | kW | $T_j$ = + 12°C | COPd | 6.18 | - |
| $T_j$ = bivalent sıcaklık | $P_{dh}$ | 4.0 | kW | $T_j$ = bivalent sıcaklık | COPd | 1.74 | - |
| $T_j$ = işletme sınır sıcaklığı | $P_{dh}$ | 2.5 | kW | $T_j$ = işletme sınır sıcaklığı | COPd | 1.17 | - |
| Hava-su ısı pompaları için: $T_j$ = – 15°C (Eğer TOL < – 20°C) | $P_{dh}$ | N/A | kW | Hava-su ısı pompaları için: Tj = – 15°C (if TOL < – 20°C) | COPd | N/A | - |
| Bivalent sıcaklık | $T_{biv}$ | -15 | °C | Hava-su ısı pompaları için: İşletme sınır sıcaklığı | TOL | -22 | °C |
| Isıtma için devir aralığı yetenekliği | $P_{cych}$ | N/A | kW | Döngü aralığı verimliliği | $COP_{cyc}$ | N/A | - |
| Değer kaybı katsayısı (**) | $C_{dh}$ | 0.9 | kW | Isıtma suyu işletme sınır sıcaklığı | WTOL | 65 | °C |
| Active mod dışındaki modlarda güç tüketimi | | | | İlave ısıtıcı | | | |
| Kapalı mod | $P_{OFF}$ | 0.010 | kW | | | | |
| Termostat-kapalı mod | $P_{TO}$ | 0.010 | kW | Nominal ısı çıkışı (**) | $p_{sup}$ | 2.5 | kw |
| Bekleme modu | $P_{SB}$ | 0.010 | kW | Enerji giriş türü | Elektrik | | |
| Krank kasa ısıtıcı modu | $P_{CK}$ | 0.000 | kW | | | | |

| **Diğer öğeler** | | | | | | | |
|---|---|---|---|---|---|---|---|
| Kapasite kontrolü | değişken | | | Hava-su ısı pompaları için: Nominal hava akış hızı, dış mekan | - | 2800 | $m^3/h$ |
| İç/dış mekan ses güç seviyesi | $L_{WA}$ | -/59 | dB | Su veya tuzlu su ile çalışan ısı pompaları için: Nominal tuzlu su veya su akış hızı, dış mekan ısı değiştirici | - | N/A | $m^3/h$ |
| Yıllık enerji tüketimi | $Q_{HE}$ | 4204 | kWh | | | | |
| Isı pompası kombi ısıtıcı için: | | | | | | | |
| **Bildirilen yük profili** | N/A | | | **Su ısıtma enerji verimliliği** | $\eta_{wh}$ | N/A | % |
| Günlük elektrik tüketimi | $Q_{elec}$ | N/A | kWh | Günlük yakıt tüketimi | $Q_{fuel}$ | N/A | kWh |
| Yıllık elektrik tüketimi | AEC | N/A | kWh | Yıllık yakıt tüketimi | AFC | N/A | GJ |
| İletişim bilgileri | Kılavuzun arka kapağına bakınız. | | | | | | |

(*) Isı pompası mekan ısıtıcıları ve ısı pompası kombi ısıtıcıları için, nominal ısı çıkışı (Prated) ısıtma tasarım yüküne (Pdesignh) eşittir ve ilave ısıtıcının (Psup) nominal ısı çıkışı, ilave ısıtma kapasitesine (sup(Tj)) eşittir.
(**) Eğer Cdh ölçümle belirlenmemişse, varsayılan bozunma katsayısı Cdh = 0.9'dur.

# Teknik Özellikler

| | |
|---|---|
| Model(s): | 8kW(ısınma 3kW);8kW |
| Hava-su ısı pompası | evet |
| Su-su ısı pompası | hayır |
| Tuzlu su-su ısı pompası | hayır |
| Düşük sıcaklık ısı pompası | hayır |
| İlave ısıtıcı ile donatılmış | evet (için 8kW(ısıtma 3kW))<br>hayır (için 8kW) |
| Isı pompası kombi ısıtıcı | hayır |
| Belirtilen iklim koşulu; | Ortalama |
| Parametreler düşük sıcaklık uygulaması için belirtilmiştir; | |

| ÖĞE | Sembol | DEĞER | BİRİM | ÖĞE | Sembol | DEĞER | BİRİM |
|---|---|---|---|---|---|---|---|
| **Nominal ısı çıkışı (*)** | Prated | 8 | kW | **Mevsimsel mekan ısıtma enerji verimliliği** | $\eta_s$ | 200 | % |
| İç mekan sıcaklığı 20 °C ve dış mekan sıcaklığında kısmi yükte ısıtma için belirtilen kapasite $T_j$ | | | | İç mekan sıcaklığı 20°C ve dış mekan sıcaklığında kısmi yükte belirtilen ısıtma kapasitesi $T_j$ | | | |
| $T_j$ = – 7°C | Prated | 7.1 | kW | $T_j$ = – 7°C | $COP_d$ | 3.12 | - |
| $T_j$ = + 2°C | $P_{dh}$ | 4.7 | kW | $T_j$ = + 2°C | $COP_d$ | 4.99 | - |
| $T_j$ = + 7°C | $P_{dh}$ | 3.0 | kW | $T_j$ = + 7°C | $COP_d$ | 6.81 | - |
| $T_j$ = + 12°C | $P_{dh}$ | 1.7 | kW | $T_j$ = + 12°C | $COP_d$ | 8.00 | - |
| $T_j$ = bivalent sıcaklık | $P_{dh}$ | 7.1 | kW | $T_j$ = bivalent sıcaklık | $COP_d$ | 3.12 | - |
| $T_j$ = işletme sınır sıcaklığı | $P_{dh}$ | 6.5 | kW | $T_j$ = işletme sınır sıcaklığı | $COP_d$ | 2.84 | - |
| Hava-su ısı pompaları için: $T_j$ = – 15°C (Eğer TOL < – 20°C) | $P_{dh}$ | N/A | kW | Hava-su ısı pompaları için: Tj = – 15°C (if TOL < – 20°C) | $COP_d$ | N/A | - |
| Bivalent sıcaklık | $T_{biv}$ | -7 | °C | Hava-su ısı pompaları için: İşletme sınır sıcaklığı | TOL | -10 | °C |
| Isıtma için devir aralığı yetenekliği | $P_{cych}$ | N/A | kW | Döngü aralığı verimliliği | $COP_{cyc}$ | N/A | - |
| Değer kaybı katsayısı (**) | $C_{dh}$ | 0.9 | kW | Isıtma suyu işletme sınır sıcaklığı | WTOL | 65 | °C |
| Active mod dışındaki modlarda güç tüketimi | | | | İlave ısıtıcı | | | |
| Kapalı mod | $P_{OFF}$ | 0.014 | kW | | | | |
| Termostat-kapalı mod | $P_{TO}$ | 0.024 | kW | Nominal ısı çıkışı (**) | $p_{sup}$ | 1.5 | kw |
| Bekleme modu | $P_{SB}$ | 0.014 | kW | Enerji giriş türü | Elektrik | | |
| Krank kasa ısıtıcı modu | $P_{CK}$ | 0.000 | kW | | | | |

| **Diğer öğeler** | | | | | | | |
|---|---|---|---|---|---|---|---|
| Kapasite kontrolü | değişken | | | Hava-su ısı pompaları için: Nominal hava akış hızı, dış mekan | - | 4000 | $m^3/h$ |
| İç/dış mekan ses güç seviyesi | $L_{WA}$ | -/60 | dB | Su veya tuzlu su ile çalışan ısı pompaları için: Nominal tuzlu su veya su akış hızı, dış mekan ısı değiştirici | - | N/A | $m^3/h$ |
| Yıllık enerji tüketimi | $Q_{HE}$ | 3276 | kWh | | | | |
| Isı pompası kombi ısıtıcı için: | | | | | | | |
| **Bildirilen yük profili** | N/A | | | **Su ısıtma enerji verimliliği** | $\eta_{wh}$ | N/A | % |
| Günlük elektrik tüketimi | $Q_{elec}$ | N/A | kWh | Günlük yakıt tüketimi | $Q_{fuel}$ | N/A | kWh |
| Yıllık elektrik tüketimi | AEC | N/A | kWh | Yıllık yakıt tüketimi | AFC | N/A | GJ |
| İletişim bilgileri | Kılavuzun arka kapağına bakınız. | | | | | | |

(*) Isı pompası mekan ısıtıcıları ve ısı pompası kombi ısıtıcıları için, nominal ısı çıkışı (Prated) ısıtma tasarım yüküne (Pdesignh) eşittir ve ilave ısıtıcının (Psup) nominal ısı çıkışı, ilave ısıtma kapasitesine (sup(Tj)) eşittir.
(**) Eğer Cdh ölçümle belirlenmemişse, varsayılan bozunma katsayısı Cdh = 0.9'dur.

# Teknik Özellikler

| | |
|---|---|
| Model(s): | 8kW(ısınma 3kW);8kW |
| Hava-su ısı pompası | evet |
| Su-su ısı pompası | hayır |
| Tuzlu su-su ısı pompası | hayır |
| Düşük sıcaklık ısı pompası | hayır |
| İlave ısıtıcı ile donatılmış | evet (için 8kW(ısıtma 3kW))<br>hayır (için 8kW) |
| Isı pompası kombi ısıtıcı | hayır |
| Belirtilen iklim koşulu; | daha sıcak |
| Parametreler düşük sıcaklık uygulaması için belirtilmiştir; | |

| ÖĞE | Sembol | DEĞER | BİRİM | ÖĞE | Sembol | DEĞER | BİRİM |
|---|---|---|---|---|---|---|---|
| **Nominal ısı çıkışı (*)** | Prated | 8 | kW | **Mevsimsel mekan ısıtma enerji verimliliği** | $\eta_s$ | 278 | % |
| İç mekan sıcaklığı 20 °C ve dış mekan sıcaklığında kısmi yükte ısıtma için belirtilen kapasite $T_j$ | | | | İç mekan sıcaklığı 20°C ve dış mekan sıcaklığında kısmi yükte belirtilen ısıtma kapasitesi $T_j$ | | | |
| $T_j$ = – 7°C | Prated | N/A | kW | $T_j$ = – 7°C | $COP_d$ | N/A | - |
| $T_j$ = + 2°C | $P_{dh}$ | 7.7 | kW | $T_j$ = + 2°C | $COP_d$ | 3.82 | - |
| $T_j$ = + 7°C | $P_{dh}$ | 5.0 | kW | $T_j$ = + 7°C | $COP_d$ | 6.12 | - |
| $T_j$ = + 12°C | $P_{dh}$ | 2.6 | kW | $T_j$ = + 12°C | $COP_d$ | 9.15 | - |
| $T_j$ = bivalent sıcaklık | $P_{dh}$ | 5.0 | kW | $T_j$ = bivalent sıcaklık | $COP_d$ | 6.12 | - |
| $T_j$ = işletme sınır sıcaklığı | $P_{dh}$ | 7.7 | kW | $T_j$ = işletme sınır sıcaklığı | $COP_d$ | 3.82 | - |
| Hava-su ısı pompaları için: $T_j$ = – 15°C (Eğer TOL < – 20°C) | $P_{dh}$ | N/A | kW | Hava-su ısı pompaları için: Tj = – 15°C (if TOL < – 20°C) | $COP_d$ | N/A | - |
| Bivalent sıcaklık | $T_{biv}$ | 7 | °C | Hava-su ısı pompaları için: İşletme sınır sıcaklığı | TOL | 2 | °C |
| Isıtma için devir aralığı yetenekliği | $P_{cych}$ | N/A | kW | Döngü aralığı verimliliği | $COP_{cyc}$ | N/A | - |
| Değer kaybı katsayısı (**) | $C_{dh}$ | 0.9 | kW | Isıtma suyu işletme sınır sıcaklığı | WTOL | 65 | °C |
| Active mod dışındaki modlarda güç tüketimi | | | | İlave ısıtıcı | | | |
| Kapalı mod | $P_{OFF}$ | 0.014 | kW | | | | |
| Termostat-kapalı mod | $P_{TO}$ | 0.024 | kW | Nominal ısı çıkışı (**) | $p_{sup}$ | 0.3 | kw |
| Bekleme modu | $P_{SB}$ | 0.014 | kW | Enerji giriş türü | Elektrik | | |
| Krank kasa ısıtıcı modu | $P_{CK}$ | 0.000 | kW | | | | |

| **Diğer öğeler** | | | | | | | |
|---|---|---|---|---|---|---|---|
| Kapasite kontrolü | değişken | | | Hava-su ısı pompaları için: Nominal hava akış hızı, dış mekan | - | 4000 | $m^3/h$ |
| İç/dış mekan ses güç seviyesi | $L_{WA}$ | -/60 | dB | Su veya tuzlu su ile çalışan ısı pompaları için: Nominal tuzlu su veya su akış hızı, dış mekan ısı değiştirici | - | N/A | $m^3/h$ |
| Yıllık enerji tüketimi | $Q_{HE}$ | 1492 | kWh | | | | |
| Isı pompası kombi ısıtıcı için: | | | | | | | |
| **Bildirilen yük profili** | N/A | | | **Su ısıtma enerji verimliliği** | $\eta_{wh}$ | N/A | % |
| Günlük elektrik tüketimi | $Q_{elec}$ | N/A | kWh | Günlük yakıt tüketimi | $Q_{fuel}$ | N/A | kWh |
| Yıllık elektrik tüketimi | AEC | N/A | kWh | Yıllık yakıt tüketimi | AFC | N/A | GJ |
| İletişim bilgileri | Kılavuzun arka kapağına bakınız. | | | | | | |

(*) Isı pompası mekan ısıtıcıları ve ısı pompası kombi ısıtıcıları için, nominal ısı çıkışı (Prated) ısıtma tasarım yüküne (Pdesignh) eşittir ve ilave ısıtıcının (Psup) nominal ısı çıkışı, ilave ısıtma kapasitesine (sup(Tj)) eşittir.
(**) Eğer Cdh ölçümle belirlenmemişse, varsayılan bozunma katsayısı Cdh = 0.9'dur.

# Teknik Özellikler

| | |
|---|---|
| Model(s): | 8kW(ısınma 3kW);8kW |
| Hava-su ısı pompası | evet |
| Su-su ısı pompası | hayır |
| Tuzlu su-su ısı pompası | hayır |
| Düşük sıcaklık ısı pompası | hayır |
| İlave ısıtıcı ile donatılmış | evet (için 8kW(ısıtma 3kW))<br>hayır (için 8kW) |
| Isı pompası kombi ısıtıcı | hayır |
| Belirtilen iklim koşulu; | daha soğuk |
| Parametreler düşük sıcaklık uygulaması için belirtilmiştir; | |

| ÖĞE | Sembol | DEĞER | BİRİM | ÖĞE | Sembol | DEĞER | BİRİM |
|---|---|---|---|---|---|---|---|
| **Nominal ısı çıkışı (*)** | Prated | 7 | kW | **Mevsimsel mekan ısıtma enerji verimliliği** | $\eta_s$ | 167 | % |
| İç mekan sıcaklığı 20 °C ve dış mekan sıcaklığında kısmi yükte ısıtma için belirtilen kapasite $T_j$ | | | | İç mekan sıcaklığı 20°C ve dış mekan sıcaklığında kısmi yükte belirtilen ısıtma kapasitesi $T_j$ | | | |
| $T_j$ = – 7°C | Prated | 4.4 | kW | $T_j$ = – 7°C | $COP_d$ | 3.59 | - |
| $T_j$ = + 2°C | $P_{dh}$ | 2.6 | kW | $T_j$ = + 2°C | $COP_d$ | 5.30 | - |
| $T_j$ = + 7°C | $P_{dh}$ | 1.6 | kW | $T_j$ = + 7°C | $COP_d$ | 5.98 | - |
| $T_j$ = + 12°C | $P_{dh}$ | 1.9 | kW | $T_j$ = + 12°C | $COP_d$ | 8.42 | - |
| $T_j$ = bivalent sıcaklık | $P_{dh}$ | 5.7 | kW | $T_j$ = bivalent sıcaklık | $COP_d$ | 2.61 | - |
| $T_j$ = işletme sınır sıcaklığı | $P_{dh}$ | 4.0 | kW | $T_j$ = işletme sınır sıcaklığı | $COP_d$ | 1.93 | - |
| Hava-su ısı pompaları için: $T_j$ = – 15°C (Eğer TOL < – 20°C) | $P_{dh}$ | N/A | kW | Hava-su ısı pompaları için: Tj = – 15°C (if TOL < – 20°C) | $COP_d$ | N/A | - |
| Bivalent sıcaklık | $T_{biv}$ | -15 | °C | Hava-su ısı pompaları için: İşletme sınır sıcaklığı | TOL | -22 | °C |
| Isıtma için devir aralığı yetenekliği | $P_{cych}$ | N/A | kW | Döngü aralığı verimliliği | $COP_{cyc}$ | N/A | - |
| Değer kaybı katsayısı (**) | $C_{dh}$ | 0.9 | kW | Isıtma suyu işletme sınır sıcaklığı | WTOL | 65 | °C |
| Active mod dışındaki modlarda güç tüketimi | | | | İlave ısıtıcı | | | |
| Kapalı mod | $P_{OFF}$ | 0.014 | kW | | | | |
| Termostat-kapalı mod | $P_{TO}$ | 0.024 | kW | Nominal ısı çıkışı (**) | $p_{sup}$ | 3.0 | kw |
| Bekleme modu | $P_{SB}$ | 0.014 | kW | Enerji giriş türü | Elektrik | | |
| Krank kasa ısıtıcı modu | $P_{CK}$ | 0.000 | kW | | | | |

| **Diğer öğeler** | | | | | | | |
|---|---|---|---|---|---|---|---|
| Kapasite kontrolü | değişken | | | Hava-su ısı pompaları için: Nominal hava akış hızı, dış mekan | - | 4000 | $m^3/h$ |
| İç/dış mekan ses güç seviyesi | $L_{WA}$ | -/60 | dB | Su veya tuzlu su ile çalışan ısı pompaları için: Nominal tuzlu su veya su akış hızı, dış mekan ısı değiştirici | - | N/A | $m^3/h$ |
| Yıllık enerji tüketimi | $Q_{HE}$ | 4044 | kWh | | | | |
| Isı pompası kombi ısıtıcı için: | | | | | | | |
| **Bildirilen yük profili** | N/A | | | **Su ısıtma enerji verimliliği** | $\eta_{wh}$ | N/A | % |
| Günlük elektrik tüketimi | $Q_{elec}$ | N/A | kWh | Günlük yakıt tüketimi | $Q_{fuel}$ | N/A | kWh |
| Yıllık elektrik tüketimi | AEC | N/A | kWh | Yıllık yakıt tüketimi | AFC | N/A | GJ |
| İletişim bilgileri | Kılavuzun arka kapağına bakınız. | | | | | | |

(*) Isı pompası mekan ısıtıcıları ve ısı pompası kombi ısıtıcıları için, nominal ısı çıkışı (Prated) ısıtma tasarım yüküne (Pdesignh) eşittir ve ilave ısıtıcının (Psup) nominal ısı çıkışı, ilave ısıtma kapasitesine (sup(Tj)) eşittir.
(**) Eğer Cdh ölçümle belirlenmemişse, varsayılan bozunma katsayısı Cdh = 0.9'dur.

# Teknik Özellikler

| | |
|---|---|
| Model(s): | 8kW(ısınma 3kW);8kW |
| Hava-su ısı pompası | evet |
| Su-su ısı pompası | hayır |
| Tuzlu su-su ısı pompası | hayır |
| Düşük sıcaklık ısı pompası | hayır |
| İlave ısıtıcı ile donatılmış | evet (için 8kW(ısıtma 3kW))<br>hayır (için 8kW) |
| Isı pompası kombi ısıtıcı | hayır |
| Belirtilen iklim koşulu; | Ortalama |
| Parametreler orta sıcaklık uygulaması için belirtilmiştir. | |

| ÖĞE | Sembol | DEĞER | BİRİM | ÖĞE | Sembol | DEĞER | BİRİM |
|---|---|---|---|---|---|---|---|
| **Nominal ısı çıkışı (*)** | Prated | 7 | kW | **Mevsimsel mekan ısıtma enerji verimliliği** | $\eta_s$ | 136 | % |
| İç mekan sıcaklığı 20 °C ve dış mekan sıcaklığında kısmi yükte ısıtma için belirtilen kapasite $T_j$ | | | | İç mekan sıcaklığı 20°C ve dış mekan sıcaklığında kısmi yükte belirtilen ısıtma kapasitesi $T_j$ | | | |
| $T_j$ = – 7°C | Prated | 5.8 | kW | $T_j$ = – 7°C | $COP_d$ | 2.20 | - |
| $T_j$ = + 2°C | $P_{dh}$ | 3.7 | kW | $T_j$ = + 2°C | $COP_d$ | 3.37 | - |
| $T_j$ = + 7°C | $P_{dh}$ | 2.4 | kW | $T_j$ = + 7°C | $COP_d$ | 4.57 | - |
| $T_j$ = + 12°C | $P_{dh}$ | 1.6 | kW | $T_j$ = + 12°C | $COP_d$ | 5.87 | - |
| $T_j$ = bivalent sıcaklık | $P_{dh}$ | 5.8 | kW | $T_j$ = bivalent sıcaklık | $COP_d$ | 2.20 | - |
| $T_j$ = işletme sınır sıcaklığı | $P_{dh}$ | 5.0 | kW | $T_j$ = işletme sınır sıcaklığı | $COP_d$ | 1.84 | - |
| Hava-su ısı pompaları için: $T_j$ = – 15°C (Eğer TOL < – 20°C) | $P_{dh}$ | N/A | kW | Hava-su ısı pompaları için: Tj = – 15°C (if TOL < – 20°C) | $COP_d$ | N/A | - |
| Bivalent sıcaklık | $T_{biv}$ | -7 | °C | Hava-su ısı pompaları için: İşletme sınır sıcaklığı | TOL | -10 | °C |
| Isıtma için devir aralığı yetenekliği | $P_{cych}$ | N/A | kW | Döngü aralığı verimliliği | $COP_{cyc}$ | N/A | - |
| Değer kaybı katsayısı (**) | $C_{dh}$ | 0.9 | kW | Isıtma suyu işletme sınır sıcaklığı | WTOL | 65 | °C |
| Active mod dışındaki modlarda güç tüketimi | | | | İlave ısıtıcı | | | |
| Kapalı mod | $P_{OFF}$ | 0.014 | kW | | | | |
| Termostat-kapalı mod | $P_{TO}$ | 0.024 | kW | Nominal ısı çıkışı (**) | $p_{sup}$ | 2.0 | kw |
| Bekleme modu | $P_{SB}$ | 0.014 | kW | Enerji giriş türü | Elektrik | | |
| Krank kasa ısıtıcı modu | $P_{CK}$ | 0.000 | kW | | | | |

| **Diğer öğeler** | | | | | | | |
|---|---|---|---|---|---|---|---|
| Kapasite kontrolü | değişken | | | Hava-su ısı pompaları için: Nominal hava akış hızı, dış mekan | - | 4000 | $m^3/h$ |
| İç/dış mekan ses güç seviyesi | $L_{WA}$ | -/60 | dB | Su veya tuzlu su ile çalışan ısı pompaları için: Nominal tuzlu su veya su akış hızı, dış mekan ısı değiştirici | - | N/A | $m^3/h$ |
| Yıllık enerji tüketimi | $Q_{HE}$ | 3937 | kWh | | | | |
| Isı pompası kombi ısıtıcı için: | | | | | | | |
| **Bildirilen yük profili** | N/A | | | **Su ısıtma enerji verimliliği** | $\eta_{wh}$ | N/A | % |
| Günlük elektrik tüketimi | $Q_{elec}$ | N/A | kWh | Günlük yakıt tüketimi | $Q_{fuel}$ | N/A | kWh |
| Yıllık elektrik tüketimi | AEC | N/A | kWh | Yıllık yakıt tüketimi | AFC | N/A | GJ |
| İletişim bilgileri | Kılavuzun arka kapağına bakınız. | | | | | | |

(*) Isı pompası mekan ısıtıcıları ve ısı pompası kombi ısıtıcıları için, nominal ısı çıkışı (Prated) ısıtma tasarım yüküne (Pdesignh) eşittir ve ilave ısıtıcının (Psup) nominal ısı çıkışı, ilave ısıtma kapasitesine (sup(Tj)) eşittir.
(**) Eğer Cdh ölçümle belirlenmemişse, varsayılan bozunma katsayısı Cdh = 0.9'dur.

# Teknik Özellikler

| | |
|---|---|
| Model(s): | 8kW(ısınma 3kW);8kW |
| Hava-su ısı pompası | evet |
| Su-su ısı pompası | hayır |
| Tuzlu su-su ısı pompası | hayır |
| Düşük sıcaklık ısı pompası | hayır |
| İlave ısıtıcı ile donatılmış | evet (için 8kW(ısıtma 3kW))<br>hayır (için 8kW) |
| Isı pompası kombi ısıtıcı | hayır |
| Belirtilen iklim koşulu; | daha sıcak |
| Parametreler orta sıcaklık uygulaması için belirtilmiştir. | |

| ÖĞE | Sembol | DEĞER | BİRİM | ÖĞE | Sembol | DEĞER | BİRİM |
|---|---|---|---|---|---|---|---|
| **Nominal ısı çıkışı (*)** | Prated | 8 | kW | **Mevsimsel mekan ısıtma enerji verimliliği** | $\eta_s$ | 171 | % |
| İç mekan sıcaklığı 20 °C ve dış mekan sıcaklığında kısmi yükte ısıtma için belirtilen kapasite $T_j$ | | | | İç mekan sıcaklığı 20°C ve dış mekan sıcaklığında kısmi yükte belirtilen ısıtma kapasitesi $T_j$ | | | |
| $T_j$ = – 7°C | Prated | N/A | kW | $T_j$ = – 7°C | $COP_d$ | N/A | - |
| $T_j$ = + 2°C | $P_{dh}$ | 7.4 | kW | $T_j$ = + 2°C | $COP_d$ | 2.52 | - |
| $T_j$ = + 7°C | $P_{dh}$ | 4.9 | kW | $T_j$ = + 7°C | $COP_d$ | 3.60 | - |
| $T_j$ = + 12°C | $P_{dh}$ | 2.2 | kW | $T_j$ = + 12°C | $COP_d$ | 5.80 | - |
| $T_j$ = bivalent sıcaklık | $P_{dh}$ | 4.9 | kW | $T_j$ = bivalent sıcaklık | $COP_d$ | 3.60 | - |
| $T_j$ = işletme sınır sıcaklığı | $P_{dh}$ | 7.4 | kW | $T_j$ = işletme sınır sıcaklığı | $COP_d$ | 2.52 | - |
| Hava-su ısı pompaları için: $T_j$ = – 15°C (Eğer TOL < – 20°C) | $P_{dh}$ | N/A | kW | Hava-su ısı pompaları için: Tj = – 15°C (if TOL < – 20°C) | $COP_d$ | N/A | - |
| Bivalent sıcaklık | $T_{biv}$ | 7 | °C | Hava-su ısı pompaları için: İşletme sınır sıcaklığı | TOL | 2 | °C |
| Isıtma için devir aralığı yetenekliği | $P_{cych}$ | N/A | kW | Döngü aralığı verimliliği | $COP_{cyc}$ | N/A | - |
| Değer kaybı katsayısı (**) | $C_{dh}$ | 0.9 | kW | Isıtma suyu işletme sınır sıcaklığı | WTOL | 65 | °C |
| Active mod dışındaki modlarda güç tüketimi | | | | İlave ısıtıcı | | | |
| Kapalı mod | $P_{OFF}$ | 0.014 | kW | | | | |
| Termostat-kapalı mod | $P_{TO}$ | 0.024 | kW | Nominal ısı çıkışı (**) | $p_{sup}$ | 0.6 | kw |
| Bekleme modu | $P_{SB}$ | 0.014 | kW | Enerji giriş türü | Elektrik | | |
| Krank kasa ısıtıcı modu | $P_{CK}$ | 0.000 | kW | | | | |

| | | | | | | | |
|---|---|---|---|---|---|---|---|
| **Diğer öğeler** | | | | | | | |
| Kapasite kontrolü | değişken | | | Hava-su ısı pompaları için: Nominal hava akış hızı, dış mekan | - | 4000 | $m^3/h$ |
| İç/dış mekan ses güç seviyesi | $L_{WA}$ | -/60 | dB | Su veya tuzlu su ile çalışan ısı pompaları için: Nominal tuzlu su veya su akış hızı, dış mekan ısı değiştirici | - | N/A | $m^3/h$ |
| Yıllık enerji tüketimi | $Q_{HE}$ | 2347 | kWh | | | | |
| Isı pompası kombi ısıtıcı için: | | | | | | | |
| **Bildirilen yük profili** | N/A | | | **Su ısıtma enerji verimliliği** | $\eta_{wh}$ | N/A | % |
| Günlük elektrik tüketimi | $Q_{elec}$ | N/A | kWh | Günlük yakıt tüketimi | $Q_{fuel}$ | N/A | kWh |
| Yıllık elektrik tüketimi | AEC | N/A | kWh | Yıllık yakıt tüketimi | AFC | N/A | GJ |
| İletişim bilgileri | Kılavuzun arka kapağına bakınız. | | | | | | |

(*) Isı pompası mekan ısıtıcıları ve ısı pompası kombi ısıtıcıları için, nominal ısı çıkışı (Prated) ısıtma tasarım yüküne (Pdesignh) eşittir ve ilave ısıtıcının (Psup) nominal ısı çıkışı, ilave ısıtma kapasitesine (sup(Tj)) eşittir.
(**) Eğer Cdh ölçümle belirlenmemişse, varsayılan bozunma katsayısı Cdh = 0.9'dur.

# Teknik Özellikler

| | |
|---|---|
| Model(s): | 8kW(ısınma 3kW);8kW |
| Hava-su ısı pompası | evet |
| Su-su ısı pompası | hayır |
| Tuzlu su-su ısı pompası | hayır |
| Düşük sıcaklık ısı pompası | hayır |
| İlave ısıtıcı ile donatılmış | evet (için 8kW(ısıtma 3kW))<br>hayır (için 8kW) |
| Isı pompası kombi ısıtıcı | hayır |
| Belirtilen iklim koşulu; | daha soğuk |
| Parametreler orta sıcaklık uygulaması için belirtilmiştir. | |

| ÖĞE | Sembol | DEĞER | BİRİM | ÖĞE | Sembol | DEĞER | BİRİM |
|---|---|---|---|---|---|---|---|
| **Nominal ısı çıkışı (*)** | Prated | 6 | kW | **Mevsimsel mekan ısıtma enerji verimliliği** | $\eta_s$ | 115 | % |
| İç mekan sıcaklığı 20 °C ve dış mekan sıcaklığında kısmi yükte ısıtma için belirtilen kapasite $T_j$ | | | | İç mekan sıcaklığı 20°C ve dış mekan sıcaklığında kısmi yükte belirtilen ısıtma kapasitesi $T_j$ | | | |
| $T_j$ = – 7°C | Prated | 3.8 | kW | $T_j$ = – 7°C | $COP_d$ | 2.48 | - |
| $T_j$ = + 2°C | $P_{dh}$ | 2.2 | kW | $T_j$ = + 2°C | $COP_d$ | 3.59 | - |
| $T_j$ = + 7°C | $P_{dh}$ | 1.4 | kW | $T_j$ = + 7°C | $COP_d$ | 4.08 | - |
| $T_j$ = + 12°C | $P_{dh}$ | 1.5 | kW | $T_j$ = + 12°C | $COP_d$ | 6.01 | - |
| $T_j$ = bivalent sıcaklık | $P_{dh}$ | 4.8 | kW | $T_j$ = bivalent sıcaklık | $COP_d$ | 1.87 | - |
| $T_j$ = işletme sınır sıcaklığı | $P_{dh}$ | 3.2 | kW | $T_j$ = işletme sınır sıcaklığı | $COP_d$ | 1.31 | - |
| Hava-su ısı pompaları için: $T_j$ = – 15°C (Eğer TOL < – 20°C) | $P_{dh}$ | N/A | kW | Hava-su ısı pompaları için: Tj = – 15°C (if TOL < – 20°C) | $COP_d$ | N/A | - |
| Bivalent sıcaklık | $T_{biv}$ | -15 | °C | Hava-su ısı pompaları için: İşletme sınır sıcaklığı | TOL | -22 | °C |
| Isıtma için devir aralığı yetenekliği | $P_{cych}$ | N/A | kW | Döngü aralığı verimliliği | $COP_{cyc}$ | N/A | - |
| Değer kaybı katsayısı (**) | $C_{dh}$ | 0.9 | kW | Isıtma suyu işletme sınır sıcaklığı | WTOL | 65 | °C |
| Active mod dışındaki modlarda güç tüketimi | | | | İlave ısıtıcı | | | |
| Kapalı mod | $P_{OFF}$ | 0.014 | kW | | | | |
| Termostat-kapalı mod | $P_{TO}$ | 0.024 | kW | Nominal ısı çıkışı (**) | $p_{sup}$ | 2.8 | kw |
| Bekleme modu | $P_{SB}$ | 0.014 | kW | Enerji giriş türü | Elektrik | | |
| Krank kasa ısıtıcı modu | $P_{CK}$ | 0.000 | kW | | | | |

| | | | | | | | |
|---|---|---|---|---|---|---|---|
| **Diğer öğeler** | | | | | | | |
| Kapasite kontrolü | değişken | | | Hava-su ısı pompaları için: Nominal hava akış hızı, dış mekan | - | 4000 | $m^3/h$ |
| İç/dış mekan ses güç seviyesi | $L_{WA}$ | -/60 | dB | Su veya tuzlu su ile çalışan ısı pompaları için: Nominal tuzlu su veya su akış hızı, dış mekan ısı değiştirici | - | N/A | $m^3/h$ |
| Yıllık enerji tüketimi | $Q_{HE}$ | 4891 | kWh | | | | |
| Isı pompası kombi ısıtıcı için: | | | | | | | |
| **Bildirilen yük profili** | N/A | | | **Su ısıtma enerji verimliliği** | $\eta_{wh}$ | N/A | % |
| Günlük elektrik tüketimi | $Q_{elec}$ | N/A | kWh | Günlük yakıt tüketimi | $Q_{fuel}$ | N/A | kWh |
| Yıllık elektrik tüketimi | AEC | N/A | kWh | Yıllık yakıt tüketimi | AFC | N/A | GJ |
| İletişim bilgileri | Kılavuzun arka kapağına bakınız. | | | | | | |

(*) Isı pompası mekan ısıtıcıları ve ısı pompası kombi ısıtıcıları için, nominal ısı çıkışı (Prated) ısıtma tasarım yüküne (Pdesignh) eşittir ve ilave ısıtıcının (Psup) nominal ısı çıkışı, ilave ısıtma kapasitesine (sup(Tj)) eşittir.
(**) Eğer Cdh ölçümle belirlenmemişse, varsayılan bozunma katsayısı Cdh = 0.9'dur.

# Teknik Özellikler

| | |
|---|---|
| Model(s): | 10kW(ısınma 3kW);10kW |
| Hava-su ısı pompası | evet |
| Su-su ısı pompası | hayır |
| Tuzlu su-su ısı pompası | hayır |
| Düşük sıcaklık ısı pompası | hayır |
| İlave ısıtıcı ile donatılmış | evet (için 10kW(ısıtma 3kW))<br>hayır (için 10kW) |
| Isı pompası kombi ısıtıcı | hayır |
| Belirtilen iklim koşulu; | Ortalama |
| Parametreler düşük sıcaklık uygulaması için belirtilmiştir; | |

| ÖĞE | Sembol | DEĞER | BİRİM | ÖĞE | Sembol | DEĞER | BİRİM |
|---|---|---|---|---|---|---|---|
| **Nominal ısı çıkışı (*)** | Prated | 9 | kW | **Mevsimsel mekan ısıtma enerji verimliliği** | $\eta_s$ | 199 | % |
| İç mekan sıcaklığı 20 °C ve dış mekan sıcaklığında kısmi yükte ısıtma için belirtilen kapasite $T_j$ | | | | İç mekan sıcaklığı 20°C ve dış mekan sıcaklığında kısmi yükte belirtilen ısıtma kapasitesi $T_j$ | | | |
| $T_j$ = – 7°C | Prated | 8.0 | kW | $T_j$ = – 7°C | $COP_d$ | 2.99 | - |
| $T_j$ = + 2°C | $P_{dh}$ | 5.0 | kW | $T_j$ = + 2°C | $COP_d$ | 4.97 | - |
| $T_j$ = + 7°C | $P_{dh}$ | 3.1 | kW | $T_j$ = + 7°C | $COP_d$ | 6.78 | - |
| $T_j$ = + 12°C | $P_{dh}$ | 2.0 | kW | $T_j$ = + 12°C | $COP_d$ | 9.10 | - |
| $T_j$ = bivalent sıcaklık | $P_{dh}$ | 8.0 | kW | $T_j$ = bivalent sıcaklık | $COP_d$ | 2.99 | - |
| $T_j$ = işletme sınır sıcaklığı | $P_{dh}$ | 7.3 | kW | $T_j$ = işletme sınır sıcaklığı | $COP_d$ | 2.72 | - |
| Hava-su ısı pompaları için: $T_j$ = – 15°C (Eğer TOL < – 20°C) | $P_{dh}$ | N/A | kW | Hava-su ısı pompaları için: Tj = – 15°C (if TOL < – 20°C) | $COP_d$ | N/A | - |
| Bivalent sıcaklık | $T_{biv}$ | -7 | °C | Hava-su ısı pompaları için: İşletme sınır sıcaklığı | TOL | -10 | °C |
| Isıtma için devir aralığı yetenekliği | $P_{cych}$ | N/A | kW | Döngü aralığı verimliliği | $COP_{cyc}$ | N/A | - |
| Değer kaybı katsayısı (**) | $C_{dh}$ | 0.9 | kW | Isıtma suyu işletme sınır sıcaklığı | WTOL | 65 | °C |
| Active mod dışındaki modlarda güç tüketimi | | | | İlave ısıtıcı | | | |
| Kapalı mod | $P_{OFF}$ | 0.014 | kW | | | | |
| Termostat-kapalı mod | $P_{TO}$ | 0.024 | kW | Nominal ısı çıkışı (**) | $p_{sup}$ | 1.7 | kw |
| Bekleme modu | $P_{SB}$ | 0.014 | kW | Enerji giriş türü | Elektrik | | |
| Krank kasa ısıtıcı modu | $P_{CK}$ | 0.000 | kW | | | | |

| **Diğer öğeler** | | | | | | | |
|---|---|---|---|---|---|---|---|
| Kapasite kontrolü | değişken | | | Hava-su ısı pompaları için: Nominal hava akış hızı, dış mekan | - | 4500 | $m^3/h$ |
| İç/dış mekan ses güç seviyesi | $L_{WA}$ | -/61 | dB | Su veya tuzlu su ile çalışan ısı pompaları için: Nominal tuzlu su veya su akış hızı, dış mekan ısı değiştirici | - | N/A | $m^3/h$ |
| Yıllık enerji tüketimi | $Q_{HE}$ | 3702 | kWh | | | | |
| Isı pompası kombi ısıtıcı için: | | | | | | | |
| **Bildirilen yük profili** | N/A | | | **Su ısıtma enerji verimliliği** | $\eta_{wh}$ | N/A | % |
| Günlük elektrik tüketimi | $Q_{elec}$ | N/A | kWh | Günlük yakıt tüketimi | $Q_{fuel}$ | N/A | kWh |
| Yıllık elektrik tüketimi | AEC | N/A | kWh | Yıllık yakıt tüketimi | AFC | N/A | GJ |
| İletişim bilgileri | Kılavuzun arka kapağına bakınız. | | | | | | |

(*) Isı pompası mekan ısıtıcıları ve ısı pompası kombi ısıtıcıları için, nominal ısı çıkışı (Prated) ısıtma tasarım yüküne (Pdesignh) eşittir ve ilave ısıtıcının (Psup) nominal ısı çıkışı, ilave ısıtma kapasitesine (sup(Tj)) eşittir.
(**) Eğer Cdh ölçümle belirlenmemişse, varsayılan bozunma katsayısı Cdh = 0.9'dur.

# Teknik Özellikler

| | |
|---|---|
| Model(s): | 10kW(ısınma 3kW);10kW |
| Hava-su ısı pompası | evet |
| Su-su ısı pompası | hayır |
| Tuzlu su-su ısı pompası | hayır |
| Düşük sıcaklık ısı pompası | hayır |
| İlave ısıtıcı ile donatılmış | evet (için 10kW(ısıtma 3kW))<br>hayır (için 10kW) |
| Isı pompası kombi ısıtıcı | hayır |
| Belirtilen iklim koşulu; | daha sıcak |
| Parametreler düşük sıcaklık uygulaması için belirtilmiştir; | |

| ÖĞE | Sembol | DEĞER | BİRİM | ÖĞE | Sembol | DEĞER | BİRİM |
|---|---|---|---|---|---|---|---|
| **Nominal ısı çıkışı (*)** | Prated | 9 | kW | **Mevsimsel mekan ısıtma enerji verimliliği** | $\eta_s$ | 268 | % |
| İç mekan sıcaklığı 20 °C ve dış mekan sıcaklığında kısmi yükte ısıtma için belirtilen kapasite $T_j$ | | | | İç mekan sıcaklığı 20°C ve dış mekan sıcaklığında kısmi yükte belirtilen ısıtma kapasitesi $T_j$ | | | |
| $T_j$ = – 7°C | Prated | N/A | kW | $T_j$ = – 7°C | $COP_d$ | N/A | - |
| $T_j$ = + 2°C | $P_{dh}$ | 8.4 | kW | $T_j$ = + 2°C | $COP_d$ | 3.67 | - |
| $T_j$ = + 7°C | $P_{dh}$ | 5.5 | kW | $T_j$ = + 7°C | $COP_d$ | 5.99 | - |
| $T_j$ = + 12°C | $P_{dh}$ | 2.4 | kW | $T_j$ = + 12°C | $COP_d$ | 8.73 | - |
| $T_j$ = bivalent sıcaklık | $P_{dh}$ | 5.5 | kW | $T_j$ = bivalent sıcaklık | $COP_d$ | 5.99 | - |
| $T_j$ = işletme sınır sıcaklığı | $P_{dh}$ | 8.4 | kW | $T_j$ = işletme sınır sıcaklığı | $COP_d$ | 3.67 | - |
| Hava-su ısı pompaları için: $T_j$ = – 15°C (Eğer TOL < – 20°C) | $P_{dh}$ | N/A | kW | Hava-su ısı pompaları için: Tj = – 15°C (if TOL < – 20°C) | $COP_d$ | N/A | - |
| Bivalent sıcaklık | $T_{biv}$ | 7 | °C | Hava-su ısı pompaları için: İşletme sınır sıcaklığı | TOL | 2 | °C |
| Isıtma için devir aralığı yetenekliği | $P_{cych}$ | N/A | kW | Döngü aralığı verimliliği | $COP_{cyc}$ | N/A | - |
| Değer kaybı katsayısı (**) | $C_{dh}$ | 0.9 | kW | Isıtma suyu işletme sınır sıcaklığı | WTOL | 65 | °C |
| Active mod dışındaki modlarda güç tüketimi | | | | İlave ısıtıcı | | | |
| Kapalı mod | $P_{OFF}$ | 0.014 | kW | | | | |
| Termostat-kapalı mod | $P_{TO}$ | 0.024 | kW | Nominal ısı çıkışı (**) | $p_{sup}$ | 0.6 | kw |
| Bekleme modu | $P_{SB}$ | 0.014 | kW | Enerji giriş türü | Elektrik | | |
| Krank kasa ısıtıcı modu | $P_{CK}$ | 0.000 | kW | | | | |

| **Diğer öğeler** | | | | | | | |
|---|---|---|---|---|---|---|---|
| Kapasite kontrolü | değişken | | | Hava-su ısı pompaları için: Nominal hava akış hızı, dış mekan | - | 4500 | $m^3/h$ |
| İç/dış mekan ses güç seviyesi | $L_{WA}$ | -/61 | dB | Su veya tuzlu su ile çalışan ısı pompaları için: Nominal tuzlu su veya su akış hızı, dış mekan ısı değiştirici | - | N/A | $m^3/h$ |
| Yıllık enerji tüketimi | $Q_{HE}$ | 1694 | kWh | | | | |
| Isı pompası kombi ısıtıcı için: | | | | | | | |
| **Bildirilen yük profili** | N/A | | | **Su ısıtma enerji verimliliği** | $\eta_{wh}$ | N/A | % |
| Günlük elektrik tüketimi | $Q_{elec}$ | N/A | kWh | Günlük yakıt tüketimi | $Q_{fuel}$ | N/A | kWh |
| Yıllık elektrik tüketimi | AEC | N/A | kWh | Yıllık yakıt tüketimi | AFC | N/A | GJ |
| İletişim bilgileri | Kılavuzun arka kapağına bakınız. | | | | | | |

(*) Isı pompası mekan ısıtıcıları ve ısı pompası kombi ısıtıcıları için, nominal ısı çıkışı (Prated) ısıtma tasarım yüküne (Pdesignh) eşittir ve ilave ısıtıcının (Psup) nominal ısı çıkışı, ilave ısıtma kapasitesine (sup(Tj)) eşittir.
(**) Eğer Cdh ölçümle belirlenmemişse, varsayılan bozunma katsayısı Cdh = 0.9'dur.

# Teknik Özellikler

| | |
|---|---|
| Model(s): | 10kW(ısınma 3kW);10kW |
| Hava-su ısı pompası | evet |
| Su-su ısı pompası | hayır |
| Tuzlu su-su ısı pompası | hayır |
| Düşük sıcaklık ısı pompası | hayır |
| İlave ısıtıcı ile donatılmış | evet (için 10kW(ısıtma 3kW))<br>hayır (için 10kW) |
| Isı pompası kombi ısıtıcı | hayır |
| Belirtilen iklim koşulu; | daha soğuk |
| Parametreler düşük sıcaklık uygulaması için belirtilmiştir; | |

| ÖĞE | Sembol | DEĞER | BİRİM | ÖĞE | Sembol | DEĞER | BİRİM |
|---|---|---|---|---|---|---|---|
| **Nominal ısı çıkışı (*)** | Prated | 8 | kW | **Mevsimsel mekan ısıtma enerji verimliliği** | $\eta_s$ | 170 | % |
| İç mekan sıcaklığı 20 °C ve dış mekan sıcaklığında kısmi yükte ısıtma için belirtilen kapasite $T_j$ | | | | İç mekan sıcaklığı 20°C ve dış mekan sıcaklığında kısmi yükte belirtilen ısıtma kapasitesi $T_j$ | | | |
| $T_j$ = – 7°C | Prated | 4.7 | kW | $T_j$ = – 7°C | $COP_d$ | 3.50 | - |
| $T_j$ = + 2°C | $P_{dh}$ | 3.0 | kW | $T_j$ = + 2°C | $COP_d$ | 5.51 | - |
| $T_j$ = + 7°C | $P_{dh}$ | 2.0 | kW | $T_j$ = + 7°C | $COP_d$ | 6.63 | - |
| $T_j$ = + 12°C | $P_{dh}$ | 1.9 | kW | $T_j$ = + 12°C | $COP_d$ | 8.58 | - |
| $T_j$ = bivalent sıcaklık | $P_{dh}$ | 6.3 | kW | $T_j$ = bivalent sıcaklık | $COP_d$ | 2.56 | - |
| $T_j$ = işletme sınır sıcaklığı | $P_{dh}$ | 4.6 | kW | $T_j$ = işletme sınır sıcaklığı | $COP_d$ | 1.99 | - |
| Hava-su ısı pompaları için: $T_j$ = – 15°C (Eğer TOL < – 20°C) | $P_{dh}$ | N/A | kW | Hava-su ısı pompaları için: Tj = – 15°C (if TOL < – 20°C) | $COP_d$ | N/A | - |
| Bivalent sıcaklık | $T_{biv}$ | -15 | °C | Hava-su ısı pompaları için: İşletme sınır sıcaklığı | TOL | -22 | °C |
| Isıtma için devir aralığı yetenekliği | $P_{cych}$ | N/A | kW | Döngü aralığı verimliliği | $COP_{cyc}$ | N/A | - |
| Değer kaybı katsayısı (**) | $C_{dh}$ | 0.9 | kW | Isıtma suyu işletme sınır sıcaklığı | WTOL | 65 | °C |
| Active mod dışındaki modlarda güç tüketimi | | | | İlave ısıtıcı | | | |
| Kapalı mod | $P_{OFF}$ | 0.014 | kW | | | | |
| Termostat-kapalı mod | $P_{TO}$ | 0.024 | kW | Nominal ısı çıkışı (**) | $p_{sup}$ | 3.4 | kw |
| Bekleme modu | $P_{SB}$ | 0.014 | kW | Enerji giriş türü | Elektrik | | |
| Krank kasa ısıtıcı modu | $P_{CK}$ | 0.000 | kW | | | | |

| **Diğer öğeler** | | | | | | | |
|---|---|---|---|---|---|---|---|
| Kapasite kontrolü | değişken | | | Hava-su ısı pompaları için: Nominal hava akış hızı, dış mekan | - | 4500 | $m^3/h$ |
| İç/dış mekan ses güç seviyesi | $L_{WA}$ | -/61 | dB | Su veya tuzlu su ile çalışan ısı pompaları için: Nominal tuzlu su veya su akış hızı, dış mekan ısı değiştirici | - | N/A | $m^3/h$ |
| Yıllık enerji tüketimi | $Q_{HE}$ | 4417 | kWh | | | | |
| Isı pompası kombi ısıtıcı için: | | | | | | | |
| **Bildirilen yük profili** | N/A | | | **Su ısıtma enerji verimliliği** | $\eta_{wh}$ | N/A | % |
| Günlük elektrik tüketimi | $Q_{elec}$ | N/A | kWh | Günlük yakıt tüketimi | $Q_{fuel}$ | N/A | kWh |
| Yıllık elektrik tüketimi | AEC | N/A | kWh | Yıllık yakıt tüketimi | AFC | N/A | GJ |
| İletişim bilgileri | Kılavuzun arka kapağına bakınız. | | | | | | |

(*) Isı pompası mekan ısıtıcıları ve ısı pompası kombi ısıtıcıları için, nominal ısı çıkışı (Prated) ısıtma tasarım yüküne (Pdesignh) eşittir ve ilave ısıtıcının (Psup) nominal ısı çıkışı, ilave ısıtma kapasitesine (sup(Tj)) eşittir.
(**) Eğer Cdh ölçümle belirlenmemişse, varsayılan bozunma katsayısı Cdh = 0.9'dur.

# Teknik Özellikler

| | |
|---|---|
| Model(s): | 10kW(ısınma 3kW);10kW |
| Hava-su ısı pompası | evet |
| Su-su ısı pompası | hayır |
| Tuzlu su-su ısı pompası | hayır |
| Düşük sıcaklık ısı pompası | hayır |
| İlave ısıtıcı ile donatılmış | evet (için 10kW(ısıtma 3kW))<br>hayır (için 10kW) |
| Isı pompası kombi ısıtıcı | hayır |
| Belirtilen iklim koşulu; | Ortalama |
| Parametreler orta sıcaklık uygulaması için belirtilmiştir. | |

| ÖĞE | Sembol | DEĞER | BİRİM | ÖĞE | Sembol | DEĞER | BİRİM |
|---|---|---|---|---|---|---|---|
| **Nominal ısı çıkışı (*)** | Prated | 8 | kW | **Mevsimsel mekan ısıtma enerji verimliliği** | $\eta_s$ | 138 | % |
| İç mekan sıcaklığı 20 °C ve dış mekan sıcaklığında kısmi yükte ısıtma için belirtilen kapasite $T_j$ | | | | İç mekan sıcaklığı 20°C ve dış mekan sıcaklığında kısmi yükte belirtilen ısıtma kapasitesi $T_j$ | | | |
| $T_j$ = – 7°C | Prated | 6.8 | kW | $T_j$ = – 7°C | $COP_d$ | 2.10 | - |
| $T_j$ = + 2°C | $P_{dh}$ | 4.2 | kW | $T_j$ = + 2°C | $COP_d$ | 3.44 | - |
| $T_j$ = + 7°C | $P_{dh}$ | 2.6 | kW | $T_j$ = + 7°C | $COP_d$ | 4.74 | - |
| $T_j$ = + 12°C | $P_{dh}$ | 1.8 | kW | $T_j$ = + 12°C | $COP_d$ | 6.22 | - |
| $T_j$ = bivalent sıcaklık | $P_{dh}$ | 6.8 | kW | $T_j$ = bivalent sıcaklık | $COP_d$ | 2.10 | - |
| $T_j$ = işletme sınır sıcaklığı | $P_{dh}$ | 5.2 | kW | $T_j$ = işletme sınır sıcaklığı | $COP_d$ | 1.83 | - |
| Hava-su ısı pompaları için: $T_j$ = – 15°C (Eğer TOL < – 20°C) | $P_{dh}$ | N/A | kW | Hava-su ısı pompaları için: Tj = – 15°C (if TOL < – 20°C) | $COP_d$ | N/A | - |
| Bivalent sıcaklık | $T_{biv}$ | -7 | °C | Hava-su ısı pompaları için: İşletme sınır sıcaklığı | TOL | -10 | °C |
| Isıtma için devir aralığı yetenekliği | $P_{cych}$ | N/A | kW | Döngü aralığı verimliliği | $COP_{cyc}$ | N/A | - |
| Değer kaybı katsayısı (**) | $C_{dh}$ | 0.9 | kW | Isıtma suyu işletme sınır sıcaklığı | WTOL | 65 | °C |
| Active mod dışındaki modlarda güç tüketimi | | | | İlave ısıtıcı | | | |
| Kapalı mod | $P_{OFF}$ | 0.014 | kW | | | | |
| Termostat-kapalı mod | $P_{TO}$ | 0.024 | kW | Nominal ısı çıkışı (**) | $p_{sup}$ | 2.8 | kw |
| Bekleme modu | $P_{SB}$ | 0.014 | kW | Enerji giriş türü | Elektrik | | |
| Krank kasa ısıtıcı modu | $P_{CK}$ | 0.000 | kW | | | | |

| **Diğer öğeler** | | | | | | | |
|---|---|---|---|---|---|---|---|
| Kapasite kontrolü | değişken | | | Hava-su ısı pompaları için: Nominal hava akış hızı, dış mekan | - | 4500 | $m^3/h$ |
| İç/dış mekan ses güç seviyesi | $L_{WA}$ | -/61 | dB | Su veya tuzlu su ile çalışan ısı pompaları için: Nominal tuzlu su veya su akış hızı, dış mekan ısı değiştirici | - | N/A | $m^3/h$ |
| Yıllık enerji tüketimi | $Q_{HE}$ | 4537 | kWh | | | | |
| Isı pompası kombi ısıtıcı için: | | | | | | | |
| **Bildirilen yük profili** | N/A | | | **Su ısıtma enerji verimliliği** | $\eta_{wh}$ | N/A | % |
| Günlük elektrik tüketimi | $Q_{elec}$ | N/A | kWh | Günlük yakıt tüketimi | $Q_{fuel}$ | N/A | kWh |
| Yıllık elektrik tüketimi | AEC | N/A | kWh | Yıllık yakıt tüketimi | AFC | N/A | GJ |
| İletişim bilgileri | Kılavuzun arka kapağına bakınız. | | | | | | |

(*) Isı pompası mekan ısıtıcıları ve ısı pompası kombi ısıtıcıları için, nominal ısı çıkışı (Prated) ısıtma tasarım yüküne (Pdesignh) eşittir ve ilave ısıtıcının (Psup) nominal ısı çıkışı, ilave ısıtma kapasitesine (sup(Tj)) eşittir.
(**) Eğer Cdh ölçümle belirlenmemişse, varsayılan bozunma katsayısı Cdh = 0.9'dur.

# Teknik Özellikler

| | |
|---|---|
| Model(s): | 10kW(ısınma 3kW);10kW |
| Hava-su ısı pompası | evet |
| Su-su ısı pompası | hayır |
| Tuzlu su-su ısı pompası | hayır |
| Düşük sıcaklık ısı pompası | hayır |
| İlave ısıtıcı ile donatılmış | evet (için 10kW(ısıtma 3kW))<br>hayır (için 10kW) |
| Isı pompası kombi ısıtıcı | hayır |
| Belirtilen iklim koşulu; | daha sıcak |
| Parametreler orta sıcaklık uygulaması için belirtilmiştir. | |

| ÖĞE | Sembol | DEĞER | BİRİM | ÖĞE | Sembol | DEĞER | BİRİM |
|---|---|---|---|---|---|---|---|
| **Nominal ısı çıkışı (*)** | Prated | 8 | kW | **Mevsimsel mekan ısıtma enerji verimliliği** | $\eta_s$ | 179 | % |
| İç mekan sıcaklığı 20 °C ve dış mekan sıcaklığında kısmi yükte ısıtma için belirtilen kapasite $T_j$ | | | | İç mekan sıcaklığı 20°C ve dış mekan sıcaklığında kısmi yükte belirtilen ısıtma kapasitesi $T_j$ | | | |
| $T_j$ = – 7°C | Prated | N/A | kW | $T_j$ = – 7°C | $COP_d$ | N/A | - |
| $T_j$ = + 2°C | $P_{dh}$ | 7.6 | kW | $T_j$ = + 2°C | $COP_d$ | 2.27 | - |
| $T_j$ = + 7°C | $P_{dh}$ | 5.2 | kW | $T_j$ = + 7°C | $COP_d$ | 3.92 | - |
| $T_j$ = + 12°C | $P_{dh}$ | 2.5 | kW | $T_j$ = + 12°C | $COP_d$ | 6.17 | - |
| $T_j$ = bivalent sıcaklık | $P_{dh}$ | 5.2 | kW | $T_j$ = bivalent sıcaklık | $COP_d$ | 3.92 | - |
| $T_j$ = işletme sınır sıcaklığı | $P_{dh}$ | 7.6 | kW | $T_j$ = işletme sınır sıcaklığı | $COP_d$ | 2.27 | - |
| Hava-su ısı pompaları için: $T_j$ = – 15°C (Eğer TOL < – 20°C) | $P_{dh}$ | N/A | kW | Hava-su ısı pompaları için: Tj = – 15°C (if TOL < – 20°C) | $COP_d$ | N/A | - |
| Bivalent sıcaklık | $T_{biv}$ | 7 | °C | Hava-su ısı pompaları için: İşletme sınır sıcaklığı | TOL | 2 | °C |
| Isıtma için devir aralığı yetenekliği | $P_{cych}$ | N/A | kW | Döngü aralığı verimliliği | $COP_{cyc}$ | N/A | - |
| Değer kaybı katsayısı (**) | $C_{dh}$ | 0.9 | kW | Isıtma suyu işletme sınır sıcaklığı | WTOL | 65 | °C |
| Active mod dışındaki modlarda güç tüketimi | | | | İlave ısıtıcı | | | |
| Kapalı mod | $P_{OFF}$ | 0.014 | kW | | | | |
| Termostat-kapalı mod | $P_{TO}$ | 0.024 | kW | Nominal ısı çıkışı (**) | $p_{sup}$ | 0.4 | kw |
| Bekleme modu | $P_{SB}$ | 0.014 | kW | Enerji giriş türü | Elektrik | | |
| Krank kasa ısıtıcı modu | $P_{CK}$ | 0.000 | kW | | | | |

| | | | | | | | |
|---|---|---|---|---|---|---|---|
| **Diğer öğeler** | | | | | | | |
| Kapasite kontrolü | değişken | | | Hava-su ısı pompaları için: Nominal hava akış hızı, dış mekan | - | 4500 | $m^3/h$ |
| İç/dış mekan ses güç seviyesi | $L_{WA}$ | -/61 | dB | Su veya tuzlu su ile çalışan ısı pompaları için: Nominal tuzlu su veya su akış hızı, dış mekan ısı değiştirici | - | N/A | $m^3/h$ |
| Yıllık enerji tüketimi | $Q_{HE}$ | 2353 | kWh | | | | |
| Isı pompası kombi ısıtıcı için: | | | | | | | |
| **Bildirilen yük profili** | N/A | | | **Su ısıtma enerji verimliliği** | $\eta_{wh}$ | N/A | % |
| Günlük elektrik tüketimi | $Q_{elec}$ | N/A | kWh | Günlük yakıt tüketimi | $Q_{fuel}$ | N/A | kWh |
| Yıllık elektrik tüketimi | AEC | N/A | kWh | Yıllık yakıt tüketimi | AFC | N/A | GJ |
| İletişim bilgileri | Kılavuzun arka kapağına bakınız. | | | | | | |

(*) Isı pompası mekan ısıtıcıları ve ısı pompası kombi ısıtıcıları için, nominal ısı çıkışı (Prated) ısıtma tasarım yüküne (Pdesignh) eşittir ve ilave ısıtıcının (Psup) nominal ısı çıkışı, ilave ısıtma kapasitesine (sup(Tj)) eşittir.
(**) Eğer Cdh ölçümle belirlenmemişse, varsayılan bozunma katsayısı Cdh = 0.9'dur.

# Teknik Özellikler

| | |
|---|---|
| Model(s): | 10kW(ısınma 3kW);10kW |
| Hava-su ısı pompası | evet |
| Su-su ısı pompası | hayır |
| Tuzlu su-su ısı pompası | hayır |
| Düşük sıcaklık ısı pompası | hayır |
| İlave ısıtıcı ile donatılmış | evet (için 10kW(ısıtma 3kW))<br>hayır (için 10kW) |
| Isı pompası kombi ısıtıcı | hayır |
| Belirtilen iklim koşulu; | daha soğuk |
| Parametreler orta sıcaklık uygulaması için belirtilmiştir. | |

| ÖĞE | Sembol | DEĞER | BİRİM | ÖĞE | Sembol | DEĞER | BİRİM |
|---|---|---|---|---|---|---|---|
| **Nominal ısı çıkışı (*)** | Prated | 7 | kW | **Mevsimsel mekan ısıtma enerji verimliliği** | $\eta_s$ | 116 | % |
| İç mekan sıcaklığı 20 °C ve dış mekan sıcaklığında kısmi yükte ısıtma için belirtilen kapasite $T_j$ | | | | İç mekan sıcaklığı 20°C ve dış mekan sıcaklığında kısmi yükte belirtilen ısıtma kapasitesi $T_j$ | | | |
| $T_j$ = – 7°C | Prated | 4.1 | kW | $T_j$ = – 7°C | $COP_d$ | 2.53 | - |
| $T_j$ = + 2°C | $P_{dh}$ | 2.6 | kW | $T_j$ = + 2°C | $COP_d$ | 3.51 | - |
| $T_j$ = + 7°C | $P_{dh}$ | 1.7 | kW | $T_j$ = + 7°C | $COP_d$ | 4.52 | - |
| $T_j$ = + 12°C | $P_{dh}$ | 1.7 | kW | $T_j$ = + 12°C | $COP_d$ | 6.51 | - |
| $T_j$ = bivalent sıcaklık | $P_{dh}$ | 5.5 | kW | $T_j$ = bivalent sıcaklık | $COP_d$ | 1.92 | - |
| $T_j$ = işletme sınır sıcaklığı | $P_{dh}$ | 2.8 | kW | $T_j$ = işletme sınır sıcaklığı | $COP_d$ | 1.24 | - |
| Hava-su ısı pompaları için: $T_j$ = – 15°C (Eğer TOL < – 20°C) | $P_{dh}$ | N/A | kW | Hava-su ısı pompaları için: Tj = – 15°C (if TOL < – 20°C) | $COP_d$ | N/A | - |
| Bivalent sıcaklık | $T_{biv}$ | -15 | °C | Hava-su ısı pompaları için: İşletme sınır sıcaklığı | TOL | -22 | °C |
| Isıtma için devir aralığı yetenekliği | $P_{cych}$ | N/A | kW | Döngü aralığı verimliliği | $COP_{cyc}$ | N/A | - |
| Değer kaybı katsayısı (**) | $C_{dh}$ | 0.9 | kW | Isıtma suyu işletme sınır sıcaklığı | WTOL | 65 | °C |
| Active mod dışındaki modlarda güç tüketimi | | | | İlave ısıtıcı | | | |
| Kapalı mod | $P_{OFF}$ | 0.014 | kW | | | | |
| Termostat-kapalı mod | $P_{TO}$ | 0.024 | kW | Nominal ısı çıkışı (**) | $p_{sup}$ | 4.2 | kw |
| Bekleme modu | $P_{SB}$ | 0.014 | kW | Enerji giriş türü | Elektrik | | |
| Krank kasa ısıtıcı modu | $P_{CK}$ | 0.000 | kW | | | | |

| | | | | | | | |
|---|---|---|---|---|---|---|---|
| **Diğer öğeler** | | | | | | | |
| Kapasite kontrolü | değişken | | | Hava-su ısı pompaları için: Nominal hava akış hızı, dış mekan | - | 4500 | $m^3/h$ |
| İç/dış mekan ses güç seviyesi | $L_{WA}$ | -/61 | dB | Su veya tuzlu su ile çalışan ısı pompaları için: Nominal tuzlu su veya su akış hızı, dış mekan ısı değiştirici | - | N/A | $m^3/h$ |
| Yıllık enerji tüketimi | $Q_{HE}$ | 5613 | kWh | | | | |
| Isı pompası kombi ısıtıcı için: | | | | | | | |
| **Bildirilen yük profili** | N/A | | | **Su ısıtma enerji verimliliği** | $\eta_{wh}$ | N/A | % |
| Günlük elektrik tüketimi | $Q_{elec}$ | N/A | kWh | Günlük yakıt tüketimi | $Q_{fuel}$ | N/A | kWh |
| Yıllık elektrik tüketimi | AEC | N/A | kWh | Yıllık yakıt tüketimi | AFC | N/A | GJ |
| İletişim bilgileri | Kılavuzun arka kapağına bakınız. | | | | | | |

(*) Isı pompası mekan ısıtıcıları ve ısı pompası kombi ısıtıcıları için, nominal ısı çıkışı (Prated) ısıtma tasarım yüküne (Pdesignh) eşittir ve ilave ısıtıcının (Psup) nominal ısı çıkışı, ilave ısıtma kapasitesine (sup(Tj)) eşittir.
(**) Eğer Cdh ölçümle belirlenmemişse, varsayılan bozunma katsayısı Cdh = 0.9'dur.

# Teknik Özellikler

| | |
|---|---|
| Model(s): | 12kW(ısınma 3kW);12kW |
| Hava-su ısı pompası | evet |
| Su-su ısı pompası | hayır |
| Tuzlu su-su ısı pompası | hayır |
| Düşük sıcaklık ısı pompası | hayır |
| İlave ısıtıcı ile donatılmış | evet (için 12kW(ısıtma 3kW))<br>hayır (için 12kW) |
| Isı pompası kombi ısıtıcı | hayır |
| Belirtilen iklim koşulu; | Ortalama |
| Parametreler düşük sıcaklık uygulaması için belirtilmiştir; | |

| ÖĞE | Sembol | DEĞER | BİRİM | ÖĞE | Sembol | DEĞER | BİRİM |
|---|---|---|---|---|---|---|---|
| **Nominal ısı çıkışı (*)** | Prated | 12 | kW | **Mevsimsel mekan ısıtma enerji verimliliği** | $\eta_s$ | 188 | % |
| İç mekan sıcaklığı 20 °C ve dış mekan sıcaklığında kısmi yükte ısıtma için belirtilen kapasite $T_j$ | | | | İç mekan sıcaklığı 20°C ve dış mekan sıcaklığında kısmi yükte belirtilen ısıtma kapasitesi $T_j$ | | | |
| $T_j$ = – 7°C | Prated | 10.7 | kW | $T_j$ = – 7°C | $COP_d$ | 2.90 | - |
| $T_j$ = + 2°C | $P_{dh}$ | 7.0 | kW | $T_j$ = + 2°C | $COP_d$ | 4.53 | - |
| $T_j$ = + 7°C | $P_{dh}$ | 4.6 | kW | $T_j$ = + 7°C | $COP_d$ | 6.66 | - |
| $T_j$ = + 12°C | $P_{dh}$ | 4.2 | kW | $T_j$ = + 12°C | $COP_d$ | 8.92 | - |
| $T_j$ = bivalent sıcaklık | $P_{dh}$ | 10.7 | kW | $T_j$ = bivalent sıcaklık | $COP_d$ | 2.90 | - |
| $T_j$ = işletme sınır sıcaklığı | $P_{dh}$ | 11.4 | kW | $T_j$ = işletme sınır sıcaklığı | $COP_d$ | 2.63 | - |
| Hava-su ısı pompaları için: $T_j$ = – 15°C (Eğer TOL < – 20°C) | $P_{dh}$ | N/A | kW | Hava-su ısı pompaları için: Tj = – 15°C (if TOL < – 20°C) | $COP_d$ | N/A | - |
| Bivalent sıcaklık | $T_{biv}$ | -7 | °C | Hava-su ısı pompaları için: İşletme sınır sıcaklığı | TOL | -10 | °C |
| Isıtma için devir aralığı yetenekliği | $P_{cych}$ | N/A | kW | Döngü aralığı verimliliği | $COP_{cyc}$ | N/A | - |
| Değer kaybı katsayısı (**) | $C_{dh}$ | 0.9 | kW | Isıtma suyu işletme sınır sıcaklığı | WTOL | 65 | °C |
| Active mod dışındaki modlarda güç tüketimi | | | | İlave ısıtıcı | | | |
| Kapalı mod | $P_{OFF}$ | 0.014 | kW | | | | |
| Termostat-kapalı mod | $P_{TO}$ | 0.024 | kW | Nominal ısı çıkışı (**) | $p_{sup}$ | 0.6 | kw |
| Bekleme modu | $P_{SB}$ | 0.014 | kW | Enerji giriş türü | Elektrik | | |
| Krank kasa ısıtıcı modu | $P_{CK}$ | 0.000 | kW | | | | |

| **Diğer öğeler** | | | | | | | |
|---|---|---|---|---|---|---|---|
| Kapasite kontrolü | değişken | | | Hava-su ısı pompaları için: Nominal hava akış hızı, dış mekan | - | 5000 | $m^3/h$ |
| İç/dış mekan ses güç seviyesi | $L_{WA}$ | -/64 | dB | Su veya tuzlu su ile çalışan ısı pompaları için: Nominal tuzlu su veya su akış hızı, dış mekan ısı değiştirici | - | N/A | $m^3/h$ |
| Yıllık enerji tüketimi | $Q_{HE}$ | 5261 | kWh | | | | |
| Isı pompası kombi ısıtıcı için: | | | | | | | |
| **Bildirilen yük profili** | N/A | | | **Su ısıtma enerji verimliliği** | $\eta_{wh}$ | N/A | % |
| Günlük elektrik tüketimi | $Q_{elec}$ | N/A | kWh | Günlük yakıt tüketimi | $Q_{fuel}$ | N/A | kWh |
| Yıllık elektrik tüketimi | AEC | N/A | kWh | Yıllık yakıt tüketimi | AFC | N/A | GJ |
| İletişim bilgileri | Kılavuzun arka kapağına bakınız. | | | | | | |

(*) Isı pompası mekan ısıtıcıları ve ısı pompası kombi ısıtıcıları için, nominal ısı çıkışı (Prated) ısıtma tasarım yüküne (Pdesignh) eşittir ve ilave ısıtıcının (Psup) nominal ısı çıkışı, ilave ısıtma kapasitesine (sup(Tj)) eşittir.
(**) Eğer Cdh ölçümle belirlenmemişse, varsayılan bozunma katsayısı Cdh = 0.9'dur.

# Teknik Özellikler

| | |
|---|---|
| Model(s): | 12kW(ısınma 3kW);12kW |
| Hava-su ısı pompası | evet |
| Su-su ısı pompası | hayır |
| Tuzlu su-su ısı pompası | hayır |
| Düşük sıcaklık ısı pompası | hayır |
| İlave ısıtıcı ile donatılmış | evet (için 12kW(ısıtma 3kW))<br>hayır (için 12kW) |
| Isı pompası kombi ısıtıcı | hayır |
| Belirtilen iklim koşulu; | daha sıcak |
| Parametreler düşük sıcaklık uygulaması için belirtilmiştir; | |

| ÖĞE | Sembol | DEĞER | BİRİM | ÖĞE | Sembol | DEĞER | BİRİM |
|---|---|---|---|---|---|---|---|
| **Nominal ısı çıkışı (*)** | Prated | 11 | kW | **Mevsimsel mekan ısıtma enerji verimliliği** | $\eta_s$ | 253 | % |
| İç mekan sıcaklığı 20 °C ve dış mekan sıcaklığında kısmi yükte ısıtma için belirtilen kapasite $T_j$ | | | | İç mekan sıcaklığı 20°C ve dış mekan sıcaklığında kısmi yükte belirtilen ısıtma kapasitesi $T_j$ | | | |
| $T_j$ = – 7°C | Prated | N/A | kW | $T_j$ = – 7°C | $COP_d$ | N/A | - |
| $T_j$ = + 2°C | $P_{dh}$ | 11.1 | kW | $T_j$ = + 2°C | $COP_d$ | 3.62 | - |
| $T_j$ = + 7°C | $P_{dh}$ | 7.1 | kW | $T_j$ = + 7°C | $COP_d$ | 5.64 | - |
| $T_j$ = + 12°C | $P_{dh}$ | 4.7 | kW | $T_j$ = + 12°C | $COP_d$ | 8.33 | - |
| $T_j$ = bivalent sıcaklık | $P_{dh}$ | 7.1 | kW | $T_j$ = bivalent sıcaklık | $COP_d$ | 5.64 | - |
| $T_j$ = işletme sınır sıcaklığı | $P_{dh}$ | 11.1 | kW | $T_j$ = işletme sınır sıcaklığı | $COP_d$ | 3.62 | - |
| Hava-su ısı pompaları için: $T_j$ = – 15°C (Eğer TOL < – 20°C) | $P_{dh}$ | N/A | kW | Hava-su ısı pompaları için: Tj = – 15°C (if TOL < – 20°C) | $COP_d$ | N/A | - |
| Bivalent sıcaklık | $T_{biv}$ | 7 | °C | Hava-su ısı pompaları için: İşletme sınır sıcaklığı | TOL | 2 | °C |
| Isıtma için devir aralığı yetenekliği | $P_{cych}$ | N/A | kW | Döngü aralığı verimliliği | $COP_{cyc}$ | N/A | - |
| Değer kaybı katsayısı (**) | $C_{dh}$ | 0.9 | kW | Isıtma suyu işletme sınır sıcaklığı | WTOL | 65 | °C |
| Active mod dışındaki modlarda güç tüketimi | | | | İlave ısıtıcı | | | |
| Kapalı mod | $P_{OFF}$ | 0.014 | kW | | | | |
| Termostat-kapalı mod | $P_{TO}$ | 0.024 | kW | Nominal ısı çıkışı (**) | $p_{sup}$ | 0.0 | kw |
| Bekleme modu | $P_{SB}$ | 0.014 | kW | Enerji giriş türü | Elektrik | | |
| Krank kasa ısıtıcı modu | $P_{CK}$ | 0.000 | kW | | | | |

| **Diğer öğeler** | | | | | | | |
|---|---|---|---|---|---|---|---|
| Kapasite kontrolü | değişken | | | Hava-su ısı pompaları için: Nominal hava akış hızı, dış mekan | - | 5000 | $m^3/h$ |
| İç/dış mekan ses güç seviyesi | $L_{WA}$ | -/64 | dB | Su veya tuzlu su ile çalışan ısı pompaları için: Nominal tuzlu su veya su akış hızı, dış mekan ısı değiştirici | - | N/A | $m^3/h$ |
| Yıllık enerji tüketimi | $Q_{HE}$ | 2326 | kWh | | | | |
| Isı pompası kombi ısıtıcı için: | | | | | | | |
| **Bildirilen yük profili** | N/A | | | **Su ısıtma enerji verimliliği** | $\eta_{wh}$ | N/A | % |
| Günlük elektrik tüketimi | $Q_{elec}$ | N/A | kWh | Günlük yakıt tüketimi | $Q_{fuel}$ | N/A | kWh |
| Yıllık elektrik tüketimi | AEC | N/A | kWh | Yıllık yakıt tüketimi | AFC | N/A | GJ |
| İletişim bilgileri | Kılavuzun arka kapağına bakınız. | | | | | | |

(*) Isı pompası mekan ısıtıcıları ve ısı pompası kombi ısıtıcıları için, nominal ısı çıkışı (Prated) ısıtma tasarım yüküne (Pdesignh) eşittir ve ilave ısıtıcının (Psup) nominal ısı çıkışı, ilave ısıtma kapasitesine (sup(Tj)) eşittir.
(**) Eğer Cdh ölçümle belirlenmemişse, varsayılan bozunma katsayısı Cdh = 0.9'dur.

# Teknik Özellikler

| | |
|---|---|
| Model(s): | 12kW(ısınma 3kW);12kW |
| Hava-su ısı pompası | evet |
| Su-su ısı pompası | hayır |
| Tuzlu su-su ısı pompası | hayır |
| Düşük sıcaklık ısı pompası | hayır |
| İlave ısıtıcı ile donatılmış | evet (için 12kW(ısıtma 3kW))<br>hayır (için 12kW) |
| Isı pompası kombi ısıtıcı | hayır |
| Belirtilen iklim koşulu; | daha soğuk |
| Parametreler düşük sıcaklık uygulaması için belirtilmiştir; | |

| ÖĞE | Sembol | DEĞER | BİRİM | ÖĞE | Sembol | DEĞER | BİRİM |
|---|---|---|---|---|---|---|---|
| **Nominal ısı çıkışı (*)** | Prated | 11 | kW | **Mevsimsel mekan ısıtma enerji verimliliği** | $\eta_s$ | 163 | % |
| İç mekan sıcaklığı 20 °C ve dış mekan sıcaklığında kısmi yükte ısıtma için belirtilen kapasite $T_j$ | | | | İç mekan sıcaklığı 20°C ve dış mekan sıcaklığında kısmi yükte belirtilen ısıtma kapasitesi $T_j$ | | | |
| $T_j$ = – 7°C | Prated | 7.2 | kW | $T_j$ = – 7°C | $COP_d$ | 3.51 | - |
| $T_j$ = + 2°C | $P_{dh}$ | 4.1 | kW | $T_j$ = + 2°C | $COP_d$ | 5.05 | - |
| $T_j$ = + 7°C | $P_{dh}$ | 3.2 | kW | $T_j$ = + 7°C | $COP_d$ | 6.18 | - |
| $T_j$ = + 12°C | $P_{dh}$ | 3.6 | kW | $T_j$ = + 12°C | $COP_d$ | 8.19 | - |
| $T_j$ = bivalent sıcaklık | $P_{dh}$ | 9.3 | kW | $T_j$ = bivalent sıcaklık | $COP_d$ | 2.59 | - |
| $T_j$ = işletme sınır sıcaklığı | $P_{dh}$ | 7.1 | kW | $T_j$ = işletme sınır sıcaklığı | $COP_d$ | 2.08 | - |
| Hava-su ısı pompaları için: $T_j$ = – 15°C (Eğer TOL < – 20°C) | $P_{dh}$ | N/A | kW | Hava-su ısı pompaları için: Tj = – 15°C (if TOL < – 20°C) | $COP_d$ | N/A | - |
| Bivalent sıcaklık | $T_{biv}$ | -15 | °C | Hava-su ısı pompaları için: İşletme sınır sıcaklığı | TOL | -22 | °C |
| Isıtma için devir aralığı yetenekliği | $P_{cych}$ | N/A | kW | Döngü aralığı verimliliği | $COP_{cyc}$ | N/A | - |
| Değer kaybı katsayısı (**) | $C_{dh}$ | 0.9 | kW | Isıtma suyu işletme sınır sıcaklığı | WTOL | 65 | °C |
| Active mod dışındaki modlarda güç tüketimi | | | | İlave ısıtıcı | | | |
| Kapalı mod | $P_{OFF}$ | 0.014 | kW | | | | |
| Termostat-kapalı mod | $P_{TO}$ | 0.024 | kW | Nominal ısı çıkışı (**) | $p_{sup}$ | 3.9 | kw |
| Bekleme modu | $P_{SB}$ | 0.014 | kW | Enerji giriş türü | Elektrik | | |
| Krank kasa ısıtıcı modu | $P_{CK}$ | 0.000 | kW | | | | |

| **Diğer öğeler** | | | | | | | |
|---|---|---|---|---|---|---|---|
| Kapasite kontrolü | değişken | | | Hava-su ısı pompaları için: Nominal hava akış hızı, dış mekan | - | 5000 | $m^3/h$ |
| İç/dış mekan ses güç seviyesi | $L_{WA}$ | -/64 | dB | Su veya tuzlu su ile çalışan ısı pompaları için: Nominal tuzlu su veya su akış hızı, dış mekan ısı değiştirici | - | N/A | $m^3/h$ |
| Yıllık enerji tüketimi | $Q_{HE}$ | 6746 | kWh | | | | |
| Isı pompası kombi ısıtıcı için: | | | | | | | |
| **Bildirilen yük profili** | N/A | | | **Su ısıtma enerji verimliliği** | $\eta_{wh}$ | N/A | % |
| Günlük elektrik tüketimi | $Q_{elec}$ | N/A | kWh | Günlük yakıt tüketimi | $Q_{fuel}$ | N/A | kWh |
| Yıllık elektrik tüketimi | AEC | N/A | kWh | Yıllık yakıt tüketimi | AFC | N/A | GJ |
| İletişim bilgileri | Kılavuzun arka kapağına bakınız. | | | | | | |

(*) Isı pompası mekan ısıtıcıları ve ısı pompası kombi ısıtıcıları için, nominal ısı çıkışı (Prated) ısıtma tasarım yüküne (Pdesignh) eşittir ve ilave ısıtıcının (Psup) nominal ısı çıkışı, ilave ısıtma kapasitesine (sup(Tj)) eşittir.
(**) Eğer Cdh ölçümle belirlenmemişse, varsayılan bozunma katsayısı Cdh = 0.9'dur.

# Teknik Özellikler

| | |
|---|---|
| Model(s): | 12kW(ısınma 3kW);12kW |
| Hava-su ısı pompası | evet |
| Su-su ısı pompası | hayır |
| Tuzlu su-su ısı pompası | hayır |
| Düşük sıcaklık ısı pompası | hayır |
| İlave ısıtıcı ile donatılmış | evet (için 12kW(ısıtma 3kW))<br>hayır (için 12kW) |
| Isı pompası kombi ısıtıcı | hayır |
| Belirtilen iklim koşulu; | Ortalama |
| Parametreler orta sıcaklık uygulaması için belirtilmiştir. | |

| ÖĞE | Sembol | DEĞER | BİRİM | ÖĞE | Sembol | DEĞER | BİRİM |
|---|---|---|---|---|---|---|---|
| **Nominal ısı çıkışı (*)** | Prated | 12 | kW | **Mevsimsel mekan ısıtma enerji verimliliği** | $\eta_s$ | 136 | % |
| İç mekan sıcaklığı 20 °C ve dış mekan sıcaklığında kısmi yükte ısıtma için belirtilen kapasite $T_j$ | | | | İç mekan sıcaklığı 20°C ve dış mekan sıcaklığında kısmi yükte belirtilen ısıtma kapasitesi $T_j$ | | | |
| $T_j$ = – 7°C | Prated | 10.7 | kW | $T_j$ = – 7°C | $COP_d$ | 2.12 | - |
| $T_j$ = + 2°C | $P_{dh}$ | 6.6 | kW | $T_j$ = + 2°C | $COP_d$ | 3.29 | - |
| $T_j$ = + 7°C | $P_{dh}$ | 4.4 | kW | $T_j$ = + 7°C | $COP_d$ | 4.74 | - |
| $T_j$ = + 12°C | $P_{dh}$ | 4.0 | kW | $T_j$ = + 12°C | $COP_d$ | 7.28 | - |
| $T_j$ = bivalent sıcaklık | $P_{dh}$ | 10.7 | kW | $T_j$ = bivalent sıcaklık | $COP_d$ | 2.12 | - |
| $T_j$ = işletme sınır sıcaklığı | $P_{dh}$ | 9.9 | kW | $T_j$ = işletme sınır sıcaklığı | $COP_d$ | 1.82 | - |
| Hava-su ısı pompaları için: $T_j$ = – 15°C (Eğer TOL < – 20°C) | $P_{dh}$ | N/A | kW | Hava-su ısı pompaları için: Tj = – 15°C (if TOL < – 20°C) | $COP_d$ | N/A | - |
| Bivalent sıcaklık | $T_{biv}$ | -7 | °C | Hava-su ısı pompaları için: İşletme sınır sıcaklığı | TOL | -10 | °C |
| Isıtma için devir aralığı yetenekliği | $P_{cych}$ | N/A | kW | Döngü aralığı verimliliği | $COP_{cyc}$ | N/A | - |
| Değer kaybı katsayısı (**) | $C_{dh}$ | 0.9 | kW | Isıtma suyu işletme sınır sıcaklığı | WTOL | 65 | °C |
| Active mod dışındaki modlarda güç tüketimi | | | | İlave ısıtıcı | | | |
| Kapalı mod | $P_{OFF}$ | 0.014 | kW | | | | |
| Termostat-kapalı mod | $P_{TO}$ | 0.024 | kW | Nominal ısı çıkışı (**) | $p_{sup}$ | 2.1 | kw |
| Bekleme modu | $P_{SB}$ | 0.014 | kW | Enerji giriş türü | Elektrik | | |
| Krank kasa ısıtıcı modu | $P_{CK}$ | 0.000 | kW | | | | |

| **Diğer öğeler** | | | | | | | |
|---|---|---|---|---|---|---|---|
| Kapasite kontrolü | değişken | | | Hava-su ısı pompaları için: Nominal hava akış hızı, dış mekan | - | 5000 | $m^3/h$ |
| İç/dış mekan ses güç seviyesi | $L_{WA}$ | -/64 | dB | Su veya tuzlu su ile çalışan ısı pompaları için: Nominal tuzlu su veya su akış hızı, dış mekan ısı değiştirici | - | N/A | $m^3/h$ |
| Yıllık enerji tüketimi | $Q_{HE}$ | 7224 | kWh | | | | |
| Isı pompası kombi ısıtıcı için: | | | | | | | |
| **Bildirilen yük profili** | N/A | | | **Su ısıtma enerji verimliliği** | $\eta_{wh}$ | N/A | % |
| Günlük elektrik tüketimi | $Q_{elec}$ | N/A | kWh | Günlük yakıt tüketimi | $Q_{fuel}$ | N/A | kWh |
| Yıllık elektrik tüketimi | AEC | N/A | kWh | Yıllık yakıt tüketimi | AFC | N/A | GJ |
| İletişim bilgileri | Kılavuzun arka kapağına bakınız. | | | | | | |

(*) Isı pompası mekan ısıtıcıları ve ısı pompası kombi ısıtıcıları için, nominal ısı çıkışı (Prated) ısıtma tasarım yüküne (Pdesignh) eşittir ve ilave ısıtıcının (Psup) nominal ısı çıkışı, ilave ısıtma kapasitesine (sup(Tj)) eşittir.
(**) Eğer Cdh ölçümle belirlenmemişse, varsayılan bozunma katsayısı Cdh = 0.9'dur.

# Teknik Özellikler

| | |
|---|---|
| Model(s): | 12kW(ısınma 3kW);12kW |
| Hava-su ısı pompası | evet |
| Su-su ısı pompası | hayır |
| Tuzlu su-su ısı pompası | hayır |
| Düşük sıcaklık ısı pompası | hayır |
| İlave ısıtıcı ile donatılmış | evet (için 12kW(ısıtma 3kW))<br>hayır (için 12kW) |
| Isı pompası kombi ısıtıcı | hayır |
| Belirtilen iklim koşulu; | daha sıcak |
| Parametreler orta sıcaklık uygulaması için belirtilmiştir. | |

| ÖĞE | Sembol | DEĞER | BİRİM | ÖĞE | Sembol | DEĞER | BİRİM |
|---|---|---|---|---|---|---|---|
| **Nominal ısı çıkışı (*)** | Prated | 12 | kW | **Mevsimsel mekan ısıtma enerji verimliliği** | $\eta_s$ | 174 | % |
| İç mekan sıcaklığı 20 °C ve dış mekan sıcaklığında kısmi yükte ısıtma için belirtilen kapasite $T_j$ | | | | İç mekan sıcaklığı 20°C ve dış mekan sıcaklığında kısmi yükte belirtilen ısıtma kapasitesi $T_j$ | | | |
| $T_j$ = – 7°C | Prated | N/A | kW | $T_j$ = – 7°C | $COP_d$ | N/A | - |
| $T_j$ = + 2°C | $P_{dh}$ | 12.1 | kW | $T_j$ = + 2°C | $COP_d$ | 2.27 | - |
| $T_j$ = + 7°C | $P_{dh}$ | 8.0 | kW | $T_j$ = + 7°C | $COP_d$ | 3.76 | - |
| $T_j$ = + 12°C | $P_{dh}$ | 4.3 | kW | $T_j$ = + 12°C | $COP_d$ | 5.95 | - |
| $T_j$ = bivalent sıcaklık | $P_{dh}$ | 8.0 | kW | $T_j$ = bivalent sıcaklık | $COP_d$ | 3.76 | - |
| $T_j$ = işletme sınır sıcaklığı | $P_{dh}$ | 12.1 | kW | $T_j$ = işletme sınır sıcaklığı | $COP_d$ | 2.27 | - |
| Hava-su ısı pompaları için: $T_j$ = – 15°C (Eğer TOL < – 20°C) | $P_{dh}$ | N/A | kW | Hava-su ısı pompaları için: Tj = – 15°C (if TOL < – 20°C) | $COP_d$ | N/A | - |
| Bivalent sıcaklık | $T_{biv}$ | 7 | °C | Hava-su ısı pompaları için: İşletme sınır sıcaklığı | TOL | 2 | °C |
| Isıtma için devir aralığı yetenekliği | $P_{cych}$ | N/A | kW | Döngü aralığı verimliliği | $COP_{cyc}$ | N/A | - |
| Değer kaybı katsayısı (**) | $C_{dh}$ | 0.9 | kW | Isıtma suyu işletme sınır sıcaklığı | WTOL | 65 | °C |
| Active mod dışındaki modlarda güç tüketimi | | | | İlave ısıtıcı | | | |
| Kapalı mod | $P_{OFF}$ | 0.014 | kW | | | | |
| Termostat-kapalı mod | $P_{TO}$ | 0.024 | kW | Nominal ısı çıkışı (**) | $p_{sup}$ | 0.0 | kw |
| Bekleme modu | $P_{SB}$ | 0.014 | kW | Enerji giriş türü | Elektrik | | |
| Krank kasa ısıtıcı modu | $P_{CK}$ | 0.000 | kW | | | | |

| | | | | | | | |
|---|---|---|---|---|---|---|---|
| **Diğer öğeler** | | | | | | | |
| Kapasite kontrolü | değişken | | | Hava-su ısı pompaları için: Nominal hava akış hızı, dış mekan | - | 5000 | $m^3/h$ |
| İç/dış mekan ses güç seviyesi | $L_{WA}$ | -/64 | dB | Su veya tuzlu su ile çalışan ısı pompaları için: Nominal tuzlu su veya su akış hızı, dış mekan ısı değiştirici | - | N/A | $m^3/h$ |
| Yıllık enerji tüketimi | $Q_{HE}$ | 3761 | kWh | | | | |
| Isı pompası kombi ısıtıcı için: | | | | | | | |
| **Bildirilen yük profili** | N/A | | | **Su ısıtma enerji verimliliği** | $\eta_{wh}$ | N/A | % |
| Günlük elektrik tüketimi | $Q_{elec}$ | N/A | kWh | Günlük yakıt tüketimi | $Q_{fuel}$ | N/A | kWh |
| Yıllık elektrik tüketimi | AEC | N/A | kWh | Yıllık yakıt tüketimi | AFC | N/A | GJ |
| İletişim bilgileri | Kılavuzun arka kapağına bakınız. | | | | | | |

(*) Isı pompası mekan ısıtıcıları ve ısı pompası kombi ısıtıcıları için, nominal ısı çıkışı (Prated) ısıtma tasarım yüküne (Pdesignh) eşittir ve ilave ısıtıcının (Psup) nominal ısı çıkışı, ilave ısıtma kapasitesine (sup(Tj)) eşittir.
(**) Eğer Cdh ölçümle belirlenmemişse, varsayılan bozunma katsayısı Cdh = 0.9'dur.

# Teknik Özellikler

| | |
|---|---|
| Model(s): | 12kW(ısınma 3kW);12kW |
| Hava-su ısı pompası | evet |
| Su-su ısı pompası | hayır |
| Tuzlu su-su ısı pompası | hayır |
| Düşük sıcaklık ısı pompası | hayır |
| İlave ısıtıcı ile donatılmış | evet (için 12kW(ısıtma 3kW))<br>hayır (için 12kW) |
| Isı pompası kombi ısıtıcı | hayır |
| Belirtilen iklim koşulu; | daha soğuk |
| Parametreler orta sıcaklık uygulaması için belirtilmiştir. | |

| ÖĞE | Sembol | DEĞER | BİRİM | ÖĞE | Sembol | DEĞER | BİRİM |
|---|---|---|---|---|---|---|---|
| **Nominal ısı çıkışı (*)** | Prated | 10 | kW | **Mevsimsel mekan ısıtma enerji verimliliği** | $\eta_s$ | 119 | % |
| İç mekan sıcaklığı 20 °C ve dış mekan sıcaklığında kısmi yükte ısıtma için belirtilen kapasite $T_j$ | | | | İç mekan sıcaklığı 20°C ve dış mekan sıcaklığında kısmi yükte belirtilen ısıtma kapasitesi $T_j$ | | | |
| $T_j$ = – 7°C | Prated | 6.7 | kW | $T_j$ = – 7°C | $COP_d$ | 2.58 | - |
| $T_j$ = + 2°C | $P_{dh}$ | 4.0 | kW | $T_j$ = + 2°C | $COP_d$ | 3.68 | - |
| $T_j$ = + 7°C | $P_{dh}$ | 2.9 | kW | $T_j$ = + 7°C | $COP_d$ | 4.57 | - |
| $T_j$ = + 12°C | $P_{dh}$ | 3.3 | kW | $T_j$ = + 12°C | $COP_d$ | 6.59 | - |
| $T_j$ = bivalent sıcaklık | $P_{dh}$ | 8.5 | kW | $T_j$ = bivalent sıcaklık | $COP_d$ | 1.84 | - |
| $T_j$ = işletme sınır sıcaklığı | $P_{dh}$ | 4.6 | kW | $T_j$ = işletme sınır sıcaklığı | $COP_d$ | 1.21 | - |
| Hava-su ısı pompaları için: $T_j$ = – 15°C (Eğer TOL < – 20°C) | $P_{dh}$ | N/A | kW | Hava-su ısı pompaları için: Tj = – 15°C (if TOL < – 20°C) | $COP_d$ | N/A | - |
| Bivalent sıcaklık | $T_{biv}$ | -15 | °C | Hava-su ısı pompaları için: İşletme sınır sıcaklığı | TOL | -22 | °C |
| Isıtma için devir aralığı yetenekliği | $P_{cych}$ | N/A | kW | Döngü aralığı verimliliği | $COP_{cyc}$ | N/A | - |
| Değer kaybı katsayısı (**) | $C_{dh}$ | 0.9 | kW | Isıtma suyu işletme sınır sıcaklığı | WTOL | 65 | °C |
| Active mod dışındaki modlarda güç tüketimi | | | | İlave ısıtıcı | | | |
| Kapalı mod | $P_{OFF}$ | 0.014 | kW | | | | |
| Termostat-kapalı mod | $P_{TO}$ | 0.024 | kW | Nominal ısı çıkışı (**) | $p_{sup}$ | 5.4 | kw |
| Bekleme modu | $P_{SB}$ | 0.014 | kW | Enerji giriş türü | Elektrik | | |
| Krank kasa ısıtıcı modu | $P_{CK}$ | 0.000 | kW | | | | |

| | | | | | | | |
|---|---|---|---|---|---|---|---|
| **Diğer öğeler** | | | | | | | |
| Kapasite kontrolü | değişken | | | Hava-su ısı pompaları için: Nominal hava akış hızı, dış mekan | - | 5000 | $m^3/h$ |
| İç/dış mekan ses güç seviyesi | $L_{WA}$ | -/64 | dB | Su veya tuzlu su ile çalışan ısı pompaları için: Nominal tuzlu su veya su akış hızı, dış mekan ısı değiştirici | - | N/A | $m^3/h$ |
| Yıllık enerji tüketimi | $Q_{HE}$ | 8470 | kWh | | | | |
| Isı pompası kombi ısıtıcı için: | | | | | | | |
| **Bildirilen yük profili** | N/A | | | **Su ısıtma enerji verimliliği** | $\eta_{wh}$ | N/A | % |
| Günlük elektrik tüketimi | $Q_{elec}$ | N/A | kWh | Günlük yakıt tüketimi | $Q_{fuel}$ | N/A | kWh |
| Yıllık elektrik tüketimi | AEC | N/A | kWh | Yıllık yakıt tüketimi | AFC | N/A | GJ |
| İletişim bilgileri | Kılavuzun arka kapağına bakınız. | | | | | | |

(*) Isı pompası mekan ısıtıcıları ve ısı pompası kombi ısıtıcıları için, nominal ısı çıkışı (Prated) ısıtma tasarım yüküne (Pdesignh) eşittir ve ilave ısıtıcının (Psup) nominal ısı çıkışı, ilave ısıtma kapasitesine (sup(Tj)) eşittir.
(**) Eğer Cdh ölçümle belirlenmemişse, varsayılan bozunma katsayısı Cdh = 0.9'dur.

# Teknik Özellikler

| | |
|---|---|
| Model(s): | 14kW(ısınma 3kW);14kW |
| Hava-su ısı pompası | evet |
| Su-su ısı pompası | hayır |
| Tuzlu su-su ısı pompası | hayır |
| Düşük sıcaklık ısı pompası | hayır |
| İlave ısıtıcı ile donatılmış | evet (için 14kW(ısıtma 3kW))<br>hayır (için 14kW) |
| Isı pompası kombi ısıtıcı | hayır |
| Belirtilen iklim koşulu; | Ortalama |
| Parametreler düşük sıcaklık uygulaması için belirtilmiştir; | |

| ÖĞE | Sembol | DEĞER | BİRİM | ÖĞE | Sembol | DEĞER | BİRİM |
|---|---|---|---|---|---|---|---|
| **Nominal ısı çıkışı (*)** | Prated | 14 | kW | **Mevsimsel mekan ısıtma enerji verimliliği** | $\eta_s$ | 182 | % |
| İç mekan sıcaklığı 20 °C ve dış mekan sıcaklığında kısmi yükte ısıtma için belirtilen kapasite $T_j$ | | | | İç mekan sıcaklığı 20°C ve dış mekan sıcaklığında kısmi yükte belirtilen ısıtma kapasitesi $T_j$ | | | |
| $T_j$ = – 7°C | Prated | 12.4 | kW | $T_j$ = – 7°C | $COP_d$ | 2.80 | - |
| $T_j$ = + 2°C | $P_{dh}$ | 7.5 | kW | $T_j$ = + 2°C | $COP_d$ | 4.38 | - |
| $T_j$ = + 7°C | $P_{dh}$ | 5.2 | kW | $T_j$ = + 7°C | $COP_d$ | 6.53 | - |
| $T_j$ = + 12°C | $P_{dh}$ | 4.5 | kW | $T_j$ = + 12°C | $COP_d$ | 8.58 | - |
| $T_j$ = bivalent sıcaklık | $P_{dh}$ | 12.4 | kW | $T_j$ = bivalent sıcaklık | $COP_d$ | 2.80 | - |
| $T_j$ = işletme sınır sıcaklığı | $P_{dh}$ | 12.8 | kW | $T_j$ = işletme sınır sıcaklığı | $COP_d$ | 2.51 | - |
| Hava-su ısı pompaları için: $T_j$ = – 15°C (Eğer TOL < – 20°C) | $P_{dh}$ | N/A | kW | Hava-su ısı pompaları için: Tj = – 15°C (if TOL < – 20°C) | $COP_d$ | N/A | - |
| Bivalent sıcaklık | $T_{biv}$ | -7 | °C | Hava-su ısı pompaları için: İşletme sınır sıcaklığı | TOL | -10 | °C |
| Isıtma için devir aralığı yetenekliği | $P_{cych}$ | N/A | kW | Döngü aralığı verimliliği | $COP_{cyc}$ | N/A | - |
| Değer kaybı katsayısı (**) | $C_{dh}$ | 0.9 | kW | Isıtma suyu işletme sınır sıcaklığı | WTOL | 65 | °C |
| Active mod dışındaki modlarda güç tüketimi | | | | İlave ısıtıcı | | | |
| Kapalı mod | $P_{OFF}$ | 0.014 | kW | | | | |
| Termostat-kapalı mod | $P_{TO}$ | 0.024 | kW | Nominal ısı çıkışı (**) | $p_{sup}$ | 1.2 | kw |
| Bekleme modu | $P_{SB}$ | 0.014 | kW | Enerji giriş türü | Elektrik | | |
| Krank kasa ısıtıcı modu | $P_{CK}$ | 0.000 | kW | | | | |

| **Diğer öğeler** | | | | | | | |
|---|---|---|---|---|---|---|---|
| Kapasite kontrolü | değişken | | | Hava-su ısı pompaları için: Nominal hava akış hızı, dış mekan | - | 5500 | $m^3/h$ |
| İç/dış mekan ses güç seviyesi | $L_{WA}$ | -/66 | dB | Su veya tuzlu su ile çalışan ısı pompaları için: Nominal tuzlu su veya su akış hızı, dış mekan ısı değiştirici | - | N/A | $m^3/h$ |
| Yıllık enerji tüketimi | $Q_{HE}$ | 6238 | kWh | | | | |
| Isı pompası kombi ısıtıcı için: | | | | | | | |
| **Bildirilen yük profili** | N/A | | | **Su ısıtma enerji verimliliği** | $\eta_{wh}$ | N/A | % |
| Günlük elektrik tüketimi | $Q_{elec}$ | N/A | kWh | Günlük yakıt tüketimi | $Q_{fuel}$ | N/A | kWh |
| Yıllık elektrik tüketimi | AEC | N/A | kWh | Yıllık yakıt tüketimi | AFC | N/A | GJ |
| İletişim bilgileri | Kılavuzun arka kapağına bakınız. | | | | | | |

(*) Isı pompası mekan ısıtıcıları ve ısı pompası kombi ısıtıcıları için, nominal ısı çıkışı (Prated) ısıtma tasarım yüküne (Pdesignh) eşittir ve ilave ısıtıcının (Psup) nominal ısı çıkışı, ilave ısıtma kapasitesine (sup(Tj)) eşittir.
(**) Eğer Cdh ölçümle belirlenmemişse, varsayılan bozunma katsayısı Cdh = 0.9'dur.

# Teknik Özellikler

| | |
|---|---|
| Model(s): | 14kW(ısınma 3kW);14kW |
| Hava-su ısı pompası | evet |
| Su-su ısı pompası | hayır |
| Tuzlu su-su ısı pompası | hayır |
| Düşük sıcaklık ısı pompası | hayır |
| İlave ısıtıcı ile donatılmış | evet (için 14kW(ısıtma 3kW))<br>hayır (için 14kW) |
| Isı pompası kombi ısıtıcı | hayır |
| Belirtilen iklim koşulu; | daha sıcak |
| Parametreler düşük sıcaklık uygulaması için belirtilmiştir; | |

| ÖĞE | Sembol | DEĞER | BİRİM | ÖĞE | Sembol | DEĞER | BİRİM |
|---|---|---|---|---|---|---|---|
| **Nominal ısı çıkışı (*)** | Prated | 12 | kW | **Mevsimsel mekan ısıtma enerji verimliliği** | $\eta_s$ | 248 | % |
| İç mekan sıcaklığı 20 °C ve dış mekan sıcaklığında kısmi yükte ısıtma için belirtilen kapasite $T_j$ | | | | İç mekan sıcaklığı 20°C ve dış mekan sıcaklığında kısmi yükte belirtilen ısıtma kapasitesi $T_j$ | | | |
| $T_j$ = – 7°C | Prated | N/A | kW | $T_j$ = – 7°C | $COP_d$ | N/A | - |
| $T_j$ = + 2°C | $P_{dh}$ | 12.3 | kW | $T_j$ = + 2°C | $COP_d$ | 3.40 | - |
| $T_j$ = + 7°C | $P_{dh}$ | 8.0 | kW | $T_j$ = + 7°C | $COP_d$ | 5.60 | - |
| $T_j$ = + 12°C | $P_{dh}$ | 4.2 | kW | $T_j$ = + 12°C | $COP_d$ | 7.94 | - |
| $T_j$ = bivalent sıcaklık | $P_{dh}$ | 8.0 | kW | $T_j$ = bivalent sıcaklık | $COP_d$ | 5.60 | - |
| $T_j$ = işletme sınır sıcaklığı | $P_{dh}$ | 12.3 | kW | $T_j$ = işletme sınır sıcaklığı | $COP_d$ | 3.40 | - |
| Hava-su ısı pompaları için: $T_j$ = – 15°C (Eğer TOL < – 20°C) | $P_{dh}$ | N/A | kW | Hava-su ısı pompaları için: Tj = – 15°C (if TOL < – 20°C) | $COP_d$ | N/A | - |
| Bivalent sıcaklık | $T_{biv}$ | 7 | °C | Hava-su ısı pompaları için: İşletme sınır sıcaklığı | TOL | 2 | °C |
| Isıtma için devir aralığı yetenekliği | $P_{cych}$ | N/A | kW | Döngü aralığı verimliliği | $COP_{cyc}$ | N/A | - |
| Değer kaybı katsayısı (**) | $C_{dh}$ | 0.9 | kW | Isıtma suyu işletme sınır sıcaklığı | WTOL | 65 | °C |
| Active mod dışındaki modlarda güç tüketimi | | | | İlave ısıtıcı | | | |
| Kapalı mod | $P_{OFF}$ | 0.014 | kW | | | | |
| Termostat-kapalı mod | $P_{TO}$ | 0.024 | kW | Nominal ısı çıkışı (**) | $p_{sup}$ | 0.0 | kw |
| Bekleme modu | $P_{SB}$ | 0.014 | kW | Enerji giriş türü | Elektrik | | |
| Krank kasa ısıtıcı modu | $P_{CK}$ | 0.000 | kW | | | | |

| **Diğer öğeler** | | | | | | | |
|---|---|---|---|---|---|---|---|
| Kapasite kontrolü | değişken | | | Hava-su ısı pompaları için: Nominal hava akış hızı, dış mekan | - | 5500 | $m^3/h$ |
| İç/dış mekan ses güç seviyesi | $L_{WA}$ | -/66 | dB | Su veya tuzlu su ile çalışan ısı pompaları için: Nominal tuzlu su veya su akış hızı, dış mekan ısı değiştirici | - | N/A | $m^3/h$ |
| Yıllık enerji tüketimi | $Q_{HE}$ | 2638 | kWh | | | | |
| Isı pompası kombi ısıtıcı için: | | | | | | | |
| **Bildirilen yük profili** | N/A | | | **Su ısıtma enerji verimliliği** | $\eta_{wh}$ | N/A | % |
| Günlük elektrik tüketimi | $Q_{elec}$ | N/A | kWh | Günlük yakıt tüketimi | $Q_{fuel}$ | N/A | kWh |
| Yıllık elektrik tüketimi | AEC | N/A | kWh | Yıllık yakıt tüketimi | AFC | N/A | GJ |
| İletişim bilgileri | Kılavuzun arka kapağına bakınız. | | | | | | |

(*) Isı pompası mekan ısıtıcıları ve ısı pompası kombi ısıtıcıları için, nominal ısı çıkışı (Prated) ısıtma tasarım yüküne (Pdesignh) eşittir ve ilave ısıtıcının (Psup) nominal ısı çıkışı, ilave ısıtma kapasitesine (sup(Tj)) eşittir.
(**) Eğer Cdh ölçümle belirlenmemişse, varsayılan bozunma katsayısı Cdh = 0.9'dur.

# Teknik Özellikler

| | |
|---|---|
| Model(s): | 14kW(ısınma 3kW);14kW |
| Hava-su ısı pompası | evet |
| Su-su ısı pompası | hayır |
| Tuzlu su-su ısı pompası | hayır |
| Düşük sıcaklık ısı pompası | hayır |
| İlave ısıtıcı ile donatılmış | evet (için 14kW(ısıtma 3kW))<br>hayır (için 14kW) |
| Isı pompası kombi ısıtıcı | hayır |
| Belirtilen iklim koşulu; | daha soğuk |
| Parametreler düşük sıcaklık uygulaması için belirtilmiştir; | |

| ÖĞE | Sembol | DEĞER | BİRİM | ÖĞE | Sembol | DEĞER | BİRİM |
|---|---|---|---|---|---|---|---|
| **Nominal ısı çıkışı (*)** | Prated | 13 | kW | **Mevsimsel mekan ısıtma enerji verimliliği** | $\eta_s$ | 156 | % |
| İç mekan sıcaklığı 20 °C ve dış mekan sıcaklığında kısmi yükte ısıtma için belirtilen kapasite $T_j$ | | | | İç mekan sıcaklığı 20°C ve dış mekan sıcaklığında kısmi yükte belirtilen ısıtma kapasitesi $T_j$ | | | |
| $T_j$ = – 7°C | Prated | 8.2 | kW | $T_j$ = – 7°C | $COP_d$ | 3.35 | - |
| $T_j$ = + 2°C | $P_{dh}$ | 4.6 | kW | $T_j$ = + 2°C | $COP_d$ | 4.72 | - |
| $T_j$ = + 7°C | $P_{dh}$ | 3.4 | kW | $T_j$ = + 7°C | $COP_d$ | 6.10 | - |
| $T_j$ = + 12°C | $P_{dh}$ | 3.8 | kW | $T_j$ = + 12°C | $COP_d$ | 8.00 | - |
| $T_j$ = bivalent sıcaklık | $P_{dh}$ | 10.6 | kW | $T_j$ = bivalent sıcaklık | $COP_d$ | 2.55 | - |
| $T_j$ = işletme sınır sıcaklığı | $P_{dh}$ | 7.9 | kW | $T_j$ = işletme sınır sıcaklığı | $COP_d$ | 2.10 | - |
| Hava-su ısı pompaları için: $T_j$ = – 15°C (Eğer TOL < – 20°C) | $P_{dh}$ | N/A | kW | Hava-su ısı pompaları için: Tj = – 15°C (if TOL < – 20°C) | $COP_d$ | N/A | - |
| Bivalent sıcaklık | $T_{biv}$ | -15 | °C | Hava-su ısı pompaları için: İşletme sınır sıcaklığı | TOL | -22 | °C |
| Isıtma için devir aralığı yetenekliği | $P_{cych}$ | N/A | kW | Döngü aralığı verimliliği | $COP_{cyc}$ | N/A | - |
| Değer kaybı katsayısı (**) | $C_{dh}$ | 0.9 | kW | Isıtma suyu işletme sınır sıcaklığı | WTOL | 65 | °C |
| Active mod dışındaki modlarda güç tüketimi | | | | İlave ısıtıcı | | | |
| Kapalı mod | $P_{OFF}$ | 0.014 | kW | | | | |
| Termostat-kapalı mod | $P_{TO}$ | 0.024 | kW | Nominal ısı çıkışı (**) | $p_{sup}$ | 5.1 | kw |
| Bekleme modu | $P_{SB}$ | 0.014 | kW | Enerji giriş türü | Elektrik | | |
| Krank kasa ısıtıcı modu | $P_{CK}$ | 0.000 | kW | | | | |

| **Diğer öğeler** | | | | | | | |
|---|---|---|---|---|---|---|---|
| Kapasite kontrolü | değişken | | | Hava-su ısı pompaları için: Nominal hava akış hızı, dış mekan | - | 5500 | $m^3/h$ |
| İç/dış mekan ses güç seviyesi | $L_{WA}$ | -/66 | dB | Su veya tuzlu su ile çalışan ısı pompaları için: Nominal tuzlu su veya su akış hızı, dış mekan ısı değiştirici | - | N/A | $m^3/h$ |
| Yıllık enerji tüketimi | $Q_{HE}$ | 8111 | kWh | | | | |
| Isı pompası kombi ısıtıcı için: | | | | | | | |
| **Bildirilen yük profili** | N/A | | | **Su ısıtma enerji verimliliği** | $\eta_{wh}$ | N/A | % |
| Günlük elektrik tüketimi | $Q_{elec}$ | N/A | kWh | Günlük yakıt tüketimi | $Q_{fuel}$ | N/A | kWh |
| Yıllık elektrik tüketimi | AEC | N/A | kWh | Yıllık yakıt tüketimi | AFC | N/A | GJ |
| İletişim bilgileri | Kılavuzun arka kapağına bakınız. | | | | | | |

(*) Isı pompası mekan ısıtıcıları ve ısı pompası kombi ısıtıcıları için, nominal ısı çıkışı (Prated) ısıtma tasarım yüküne (Pdesignh) eşittir ve ilave ısıtıcının (Psup) nominal ısı çıkışı, ilave ısıtma kapasitesine (sup(Tj)) eşittir.
(**) Eğer Cdh ölçümle belirlenmemişse, varsayılan bozunma katsayısı Cdh = 0.9'dur.

# Teknik Özellikler

| | |
|---|---|
| Model(s): | 14kW(ısınma 3kW);14kW |
| Hava-su ısı pompası | evet |
| Su-su ısı pompası | hayır |
| Tuzlu su-su ısı pompası | hayır |
| Düşük sıcaklık ısı pompası | hayır |
| İlave ısıtıcı ile donatılmış | evet (için 14kW(ısıtma 3kW))<br>hayır (için 14kW) |
| Isı pompası kombi ısıtıcı | hayır |
| Belirtilen iklim koşulu; | Ortalama |
| Parametreler orta sıcaklık uygulaması için belirtilmiştir. | |

| ÖĞE | Sembol | DEĞER | BİRİM | ÖĞE | Sembol | DEĞER | BİRİM |
|---|---|---|---|---|---|---|---|
| **Nominal ısı çıkışı (*)** | Prated | 12 | kW | **Mevsimsel mekan ısıtma enerji verimliliği** | $\eta_s$ | 134 | % |
| İç mekan sıcaklığı 20 °C ve dış mekan sıcaklığında kısmi yükte ısıtma için belirtilen kapasite $T_j$ | | | | İç mekan sıcaklığı 20°C ve dış mekan sıcaklığında kısmi yükte belirtilen ısıtma kapasitesi $T_j$ | | | |
| $T_j$ = – 7°C | Prated | 10.9 | kW | $T_j$ = – 7°C | $COP_d$ | 1.99 | - |
| $T_j$ = + 2°C | $P_{dh}$ | 6.9 | kW | $T_j$ = + 2°C | $COP_d$ | 3.26 | - |
| $T_j$ = + 7°C | $P_{dh}$ | 4.5 | kW | $T_j$ = + 7°C | $COP_d$ | 4.79 | - |
| $T_j$ = + 12°C | $P_{dh}$ | 4.0 | kW | $T_j$ = + 12°C | $COP_d$ | 7.25 | - |
| $T_j$ = bivalent sıcaklık | $P_{dh}$ | 10.9 | kW | $T_j$ = bivalent sıcaklık | $COP_d$ | 1.99 | - |
| $T_j$ = işletme sınır sıcaklığı | $P_{dh}$ | 10.3 | kW | $T_j$ = işletme sınır sıcaklığı | $COP_d$ | 1.81 | - |
| Hava-su ısı pompaları için: $T_j$ = – 15°C (Eğer TOL < – 20°C) | $P_{dh}$ | N/A | kW | Hava-su ısı pompaları için: Tj = – 15°C (if TOL < – 20°C) | $COP_d$ | N/A | - |
| Bivalent sıcaklık | $T_{biv}$ | -7 | °C | Hava-su ısı pompaları için: İşletme sınır sıcaklığı | TOL | -10 | °C |
| Isıtma için devir aralığı yetenekliği | $P_{cych}$ | N/A | kW | Döngü aralığı verimliliği | $COP_{cyc}$ | N/A | - |
| Değer kaybı katsayısı (**) | $C_{dh}$ | 0.9 | kW | Isıtma suyu işletme sınır sıcaklığı | WTOL | 65 | °C |
| Active mod dışındaki modlarda güç tüketimi | | | | İlave ısıtıcı | | | |
| Kapalı mod | $P_{OFF}$ | 0.014 | kW | | | | |
| Termostat-kapalı mod | $P_{TO}$ | 0.024 | kW | Nominal ısı çıkışı (**) | $p_{sup}$ | 1.7 | kw |
| Bekleme modu | $P_{SB}$ | 0.014 | kW | Enerji giriş türü | Elektrik | | |
| Krank kasa ısıtıcı modu | $P_{CK}$ | 0.000 | kW | | | | |

| | | | | | | | |
|---|---|---|---|---|---|---|---|
| **Diğer öğeler** | | | | | | | |
| Kapasite kontrolü | değişken | | | Hava-su ısı pompaları için: Nominal hava akış hızı, dış mekan | - | 5500 | $m^3/h$ |
| İç/dış mekan ses güç seviyesi | $L_{WA}$ | -/66 | dB | Su veya tuzlu su ile çalışan ısı pompaları için: Nominal tuzlu su veya su akış hızı, dış mekan ısı değiştirici | - | N/A | $m^3/h$ |
| Yıllık enerji tüketimi | $Q_{HE}$ | 7427 | kWh | | | | |
| Isı pompası kombi ısıtıcı için: | | | | | | | |
| **Bildirilen yük profili** | N/A | | | **Su ısıtma enerji verimliliği** | $\eta_{wh}$ | N/A | % |
| Günlük elektrik tüketimi | $Q_{elec}$ | N/A | kWh | Günlük yakıt tüketimi | $Q_{fuel}$ | N/A | kWh |
| Yıllık elektrik tüketimi | AEC | N/A | kWh | Yıllık yakıt tüketimi | AFC | N/A | GJ |
| İletişim bilgileri | Kılavuzun arka kapağına bakınız. | | | | | | |

(*) Isı pompası mekan ısıtıcıları ve ısı pompası kombi ısıtıcıları için, nominal ısı çıkışı (Prated) ısıtma tasarım yüküne (Pdesignh) eşittir ve ilave ısıtıcının (Psup) nominal ısı çıkışı, ilave ısıtma kapasitesine (sup(Tj)) eşittir.
(**) Eğer Cdh ölçümle belirlenmemişse, varsayılan bozunma katsayısı Cdh = 0.9'dur.

# Teknik Özellikler

| | |
|---|---|
| Model(s): | 14kW(ısınma 3kW);14kW |
| Hava-su ısı pompası | evet |
| Su-su ısı pompası | hayır |
| Tuzlu su-su ısı pompası | hayır |
| Düşük sıcaklık ısı pompası | hayır |
| İlave ısıtıcı ile donatılmış | evet (için 14kW(ısıtma 3kW))<br>hayır (için 14kW) |
| Isı pompası kombi ısıtıcı | hayır |
| Belirtilen iklim koşulu; | daha sıcak |
| Parametreler orta sıcaklık uygulaması için belirtilmiştir. | |

| ÖĞE | Sembol | DEĞER | BİRİM | ÖĞE | Sembol | DEĞER | BİRİM |
|---|---|---|---|---|---|---|---|
| **Nominal ısı çıkışı (*)** | Prated | 14 | kW | **Mevsimsel mekan ısıtma enerji verimliliği** | $\eta_s$ | 170 | % |
| İç mekan sıcaklığı 20 °C ve dış mekan sıcaklığında kısmi yükte ısıtma için belirtilen kapasite $T_j$ | | | | İç mekan sıcaklığı 20°C ve dış mekan sıcaklığında kısmi yükte belirtilen ısıtma kapasitesi $T_j$ | | | |
| $T_j$ = – 7°C | Prated | N/A | kW | $T_j$ = – 7°C | $COP_d$ | N/A | - |
| $T_j$ = + 2°C | $P_{dh}$ | 13.1 | kW | $T_j$ = + 2°C | $COP_d$ | 2.25 | - |
| $T_j$ = + 7°C | $P_{dh}$ | 9.0 | kW | $T_j$ = + 7°C | $COP_d$ | 3.61 | - |
| $T_j$ = + 12°C | $P_{dh}$ | 4.1 | kW | $T_j$ = + 12°C | $COP_d$ | 5.94 | - |
| $T_j$ = bivalent sıcaklık | $P_{dh}$ | 9.0 | kW | $T_j$ = bivalent sıcaklık | $COP_d$ | 3.61 | - |
| $T_j$ = işletme sınır sıcaklığı | $P_{dh}$ | 13.1 | kW | $T_j$ = işletme sınır sıcaklığı | $COP_d$ | 2.25 | - |
| Hava-su ısı pompaları için: $T_j$ = – 15°C (Eğer TOL < – 20°C) | $P_{dh}$ | N/A | kW | Hava-su ısı pompaları için: Tj = – 15°C (if TOL < – 20°C) | $COP_d$ | N/A | - |
| Bivalent sıcaklık | $T_{biv}$ | 7 | °C | Hava-su ısı pompaları için: İşletme sınır sıcaklığı | TOL | 2 | °C |
| Isıtma için devir aralığı yetenekliği | $P_{cych}$ | N/A | kW | Döngü aralığı verimliliği | $COP_{cyc}$ | N/A | - |
| Değer kaybı katsayısı (**) | $C_{dh}$ | 0.9 | kW | Isıtma suyu işletme sınır sıcaklığı | WTOL | 65 | °C |
| Active mod dışındaki modlarda güç tüketimi | | | | İlave ısıtıcı | | | |
| Kapalı mod | $P_{OFF}$ | 0.014 | kW | | | | |
| Termostat-kapalı mod | $P_{TO}$ | 0.024 | kW | Nominal ısı çıkışı (**) | $p_{sup}$ | 0.0 | kw |
| Bekleme modu | $P_{SB}$ | 0.014 | kW | Enerji giriş türü | Elektrik | | |
| Krank kasa ısıtıcı modu | $P_{CK}$ | 0.000 | kW | | | | |

| **Diğer öğeler** | | | | | | | |
|---|---|---|---|---|---|---|---|
| Kapasite kontrolü | değişken | | | Hava-su ısı pompaları için: Nominal hava akış hızı, dış mekan | - | 5500 | $m^3/h$ |
| İç/dış mekan ses güç seviyesi | $L_{WA}$ | -/66 | dB | Su veya tuzlu su ile çalışan ısı pompaları için: Nominal tuzlu su veya su akış hızı, dış mekan ısı değiştirici | - | N/A | $m^3/h$ |
| Yıllık enerji tüketimi | $Q_{HE}$ | 4323 | kWh | | | | |
| Isı pompası kombi ısıtıcı için: | | | | | | | |
| **Bildirilen yük profili** | N/A | | | **Su ısıtma enerji verimliliği** | $\eta_{wh}$ | N/A | % |
| Günlük elektrik tüketimi | $Q_{elec}$ | N/A | kWh | Günlük yakıt tüketimi | $Q_{fuel}$ | N/A | kWh |
| Yıllık elektrik tüketimi | AEC | N/A | kWh | Yıllık yakıt tüketimi | AFC | N/A | GJ |
| İletişim bilgileri | Kılavuzun arka kapağına bakınız. | | | | | | |

(*) Isı pompası mekan ısıtıcıları ve ısı pompası kombi ısıtıcıları için, nominal ısı çıkışı (Prated) ısıtma tasarım yüküne (Pdesignh) eşittir ve ilave ısıtıcının (Psup) nominal ısı çıkışı, ilave ısıtma kapasitesine (sup(Tj)) eşittir.
(**) Eğer Cdh ölçümle belirlenmemişse, varsayılan bozunma katsayısı Cdh = 0.9'dur.

# Teknik Özellikler

| | |
|---|---|
| Model(s): | 14kW(ısınma 3kW);14kW |
| Hava-su ısı pompası | evet |
| Su-su ısı pompası | hayır |
| Tuzlu su-su ısı pompası | hayır |
| Düşük sıcaklık ısı pompası | hayır |
| İlave ısıtıcı ile donatılmış | evet (için 14kW(ısıtma 3kW))<br>hayır (için 14kW) |
| Isı pompası kombi ısıtıcı | hayır |
| Belirtilen iklim koşulu; | daha soğuk |
| Parametreler orta sıcaklık uygulaması için belirtilmiştir. | |

| ÖĞE | Sembol | DEĞER | BİRİM | ÖĞE | Sembol | DEĞER | BİRİM |
|---|---|---|---|---|---|---|---|
| **Nominal ısı çıkışı (*)** | Prated | 11 | kW | **Mevsimsel mekan ısıtma enerji verimliliği** | $\eta_s$ | 117 | % |
| İç mekan sıcaklığı 20 °C ve dış mekan sıcaklığında kısmi yükte ısıtma için belirtilen kapasite $T_j$ | | | | İç mekan sıcaklığı 20°C ve dış mekan sıcaklığında kısmi yükte belirtilen ısıtma kapasitesi $T_j$ | | | |
| $T_j$ = – 7°C | Prated | 7.2 | kW | $T_j$ = – 7°C | $COP_d$ | 2.56 | - |
| $T_j$ = + 2°C | $P_{dh}$ | 4.2 | kW | $T_j$ = + 2°C | $COP_d$ | 3.62 | - |
| $T_j$ = + 7°C | $P_{dh}$ | 3.1 | kW | $T_j$ = + 7°C | $COP_d$ | 4.77 | - |
| $T_j$ = + 12°C | $P_{dh}$ | 3.6 | kW | $T_j$ = + 12°C | $COP_d$ | 6.40 | - |
| $T_j$ = bivalent sıcaklık | $P_{dh}$ | 8.9 | kW | $T_j$ = bivalent sıcaklık | $COP_d$ | 1.82 | - |
| $T_j$ = işletme sınır sıcaklığı | $P_{dh}$ | 4.4 | kW | $T_j$ = işletme sınır sıcaklığı | $COP_d$ | 1.16 | - |
| Hava-su ısı pompaları için: $T_j$ = – 15°C (Eğer TOL < – 20°C) | $P_{dh}$ | N/A | kW | Hava-su ısı pompaları için: Tj = – 15°C (if TOL < – 20°C) | $COP_d$ | N/A | - |
| Bivalent sıcaklık | $T_{biv}$ | -15 | °C | Hava-su ısı pompaları için: İşletme sınır sıcaklığı | TOL | -22 | °C |
| Isıtma için devir aralığı yetenekliği | $P_{cych}$ | N/A | kW | Döngü aralığı verimliliği | $COP_{cyc}$ | N/A | - |
| Değer kaybı katsayısı (**) | $C_{dh}$ | 0.9 | kW | Isıtma suyu işletme sınır sıcaklığı | WTOL | 65 | °C |
| Active mod dışındaki modlarda güç tüketimi | | | | İlave ısıtıcı | | | |
| Kapalı mod | $P_{OFF}$ | 0.014 | kW | | | | |
| Termostat-kapalı mod | $P_{TO}$ | 0.024 | kW | Nominal ısı çıkışı (**) | $p_{sup}$ | 6.6 | kw |
| Bekleme modu | $P_{SB}$ | 0.014 | kW | Enerji giriş türü | Elektrik | | |
| Krank kasa ısıtıcı modu | $P_{CK}$ | 0.000 | kW | | | | |

| | | | | | | | |
|---|---|---|---|---|---|---|---|
| **Diğer öğeler** | | | | | | | |
| Kapasite kontrolü | değişken | | | Hava-su ısı pompaları için: Nominal hava akış hızı, dış mekan | - | 5500 | $m^3/h$ |
| İç/dış mekan ses güç seviyesi | $L_{WA}$ | -/66 | dB | Su veya tuzlu su ile çalışan ısı pompaları için: Nominal tuzlu su veya su akış hızı, dış mekan ısı değiştirici | - | N/A | $m^3/h$ |
| Yıllık enerji tüketimi | $Q_{HE}$ | 8975 | kWh | | | | |
| Isı pompası kombi ısıtıcı için: | | | | | | | |
| **Bildirilen yük profili** | N/A | | | **Su ısıtma enerji verimliliği** | $\eta_{wh}$ | N/A | % |
| Günlük elektrik tüketimi | $Q_{elec}$ | N/A | kWh | Günlük yakıt tüketimi | $Q_{fuel}$ | N/A | kWh |
| Yıllık elektrik tüketimi | AEC | N/A | kWh | Yıllık yakıt tüketimi | AFC | N/A | GJ |
| İletişim bilgileri | Kılavuzun arka kapağına bakınız. | | | | | | |

(*) Isı pompası mekan ısıtıcıları ve ısı pompası kombi ısıtıcıları için, nominal ısı çıkışı (Prated) ısıtma tasarım yüküne (Pdesignh) eşittir ve ilave ısıtıcının (Psup) nominal ısı çıkışı, ilave ısıtma kapasitesine (sup(Tj)) eşittir.
(**) Eğer Cdh ölçümle belirlenmemişse, varsayılan bozunma katsayısı Cdh = 0.9'dur.

# Teknik Özellikler

| | |
|---|---|
| Model(s): | 16kW(ısınma 3kW);16kW |
| Hava-su ısı pompası | evet |
| Su-su ısı pompası | hayır |
| Tuzlu su-su ısı pompası | hayır |
| Düşük sıcaklık ısı pompası | hayır |
| İlave ısıtıcı ile donatılmış | evet (için 16kW(ısıtma 3kW))<br>hayır (için 16kW) |
| Isı pompası kombi ısıtıcı | hayır |
| Belirtilen iklim koşulu; | Ortalama |
| Parametreler düşük sıcaklık uygulaması için belirtilmiştir; | |

| ÖĞE | Sembol | DEĞER | BİRİM | ÖĞE | Sembol | DEĞER | BİRİM |
|---|---|---|---|---|---|---|---|
| **Nominal ısı çıkışı (*)** | Prated | 15 | kW | **Mevsimsel mekan ısıtma enerji verimliliği** | $\eta_s$ | 179 | % |
| İç mekan sıcaklığı 20 °C ve dış mekan sıcaklığında kısmi yükte ısıtma için belirtilen kapasite $T_j$ | | | | İç mekan sıcaklığı 20°C ve dış mekan sıcaklığında kısmi yükte belirtilen ısıtma kapasitesi $T_j$ | | | |
| $T_j$ = – 7°C | Prated | 13.4 | kW | $T_j$ = – 7°C | $COP_d$ | 2.66 | - |
| $T_j$ = + 2°C | $P_{dh}$ | 8.0 | kW | $T_j$ = + 2°C | $COP_d$ | 4.33 | - |
| $T_j$ = + 7°C | $P_{dh}$ | 5.4 | kW | $T_j$ = + 7°C | $COP_d$ | 6.48 | - |
| $T_j$ = + 12°C | $P_{dh}$ | 4.6 | kW | $T_j$ = + 12°C | $COP_d$ | 8.96 | - |
| $T_j$ = bivalent sıcaklık | $P_{dh}$ | 13.4 | kW | $T_j$ = bivalent sıcaklık | $COP_d$ | 2.66 | - |
| $T_j$ = işletme sınır sıcaklığı | $P_{dh}$ | 13.4 | kW | $T_j$ = işletme sınır sıcaklığı | $COP_d$ | 2.46 | - |
| Hava-su ısı pompaları için: $T_j$ = – 15°C (Eğer TOL < – 20°C) | $P_{dh}$ | N/A | kW | Hava-su ısı pompaları için: Tj = – 15°C (if TOL < – 20°C) | $COP_d$ | N/A | - |
| Bivalent sıcaklık | $T_{biv}$ | -7 | °C | Hava-su ısı pompaları için: İşletme sınır sıcaklığı | TOL | -10 | °C |
| Isıtma için devir aralığı yetenekliği | $P_{cych}$ | N/A | kW | Döngü aralığı verimliliği | $COP_{cyc}$ | N/A | - |
| Değer kaybı katsayısı (**) | $C_{dh}$ | 0.9 | kW | Isıtma suyu işletme sınır sıcaklığı | WTOL | 65 | °C |
| Active mod dışındaki modlarda güç tüketimi | | | | İlave ısıtıcı | | | |
| Kapalı mod | $P_{OFF}$ | 0.014 | kW | | | | |
| Termostat-kapalı mod | $P_{TO}$ | 0.024 | kW | Nominal ısı çıkışı (**) | $p_{sup}$ | 1.6 | kw |
| Bekleme modu | $P_{SB}$ | 0.014 | kW | Enerji giriş türü | Elektrik | | |
| Krank kasa ısıtıcı modu | $P_{CK}$ | 0.000 | kW | | | | |

| **Diğer öğeler** | | | | | | | |
|---|---|---|---|---|---|---|---|
| Kapasite kontrolü | değişken | | | Hava-su ısı pompaları için: Nominal hava akış hızı, dış mekan | - | 6000 | $m^3/h$ |
| İç/dış mekan ses güç seviyesi | $L_{WA}$ | -/68 | dB | Su veya tuzlu su ile çalışan ısı pompaları için: Nominal tuzlu su veya su akış hızı, dış mekan ısı değiştirici | - | N/A | $m^3/h$ |
| Yıllık enerji tüketimi | $Q_{HE}$ | 6863 | kWh | | | | |
| Isı pompası kombi ısıtıcı için: | | | | | | | |
| **Bildirilen yük profili** | N/A | | | **Su ısıtma enerji verimliliği** | $\eta_{wh}$ | N/A | % |
| Günlük elektrik tüketimi | $Q_{elec}$ | N/A | kWh | Günlük yakıt tüketimi | $Q_{fuel}$ | N/A | kWh |
| Yıllık elektrik tüketimi | AEC | N/A | kWh | Yıllık yakıt tüketimi | AFC | N/A | GJ |
| İletişim bilgileri | Kılavuzun arka kapağına bakınız. | | | | | | |

(*) Isı pompası mekan ısıtıcıları ve ısı pompası kombi ısıtıcıları için, nominal ısı çıkışı (Prated) ısıtma tasarım yüküne (Pdesignh) eşittir ve ilave ısıtıcının (Psup) nominal ısı çıkışı, ilave ısıtma kapasitesine (sup(Tj)) eşittir.
(**) Eğer Cdh ölçümle belirlenmemişse, varsayılan bozunma katsayısı Cdh = 0.9'dur.

# Teknik Özellikler

| | |
|---|---|
| Model(s): | 16kW(ısınma 3kW);16kW |
| Hava-su ısı pompası | evet |
| Su-su ısı pompası | hayır |
| Tuzlu su-su ısı pompası | hayır |
| Düşük sıcaklık ısı pompası | hayır |
| İlave ısıtıcı ile donatılmış | evet (için 16kW(ısıtma 3kW))<br>hayır (için 16kW) |
| Isı pompası kombi ısıtıcı | hayır |
| Belirtilen iklim koşulu; | daha sıcak |
| Parametreler düşük sıcaklık uygulaması için belirtilmiştir; | |

| ÖĞE | Sembol | DEĞER | BİRİM | ÖĞE | Sembol | DEĞER | BİRİM |
|---|---|---|---|---|---|---|---|
| **Nominal ısı çıkışı (*)** | Prated | 13 | kW | **Mevsimsel mekan ısıtma enerji verimliliği** | $\eta_s$ | 239 | % |
| İç mekan sıcaklığı 20 °C ve dış mekan sıcaklığında kısmi yükte ısıtma için belirtilen kapasite $T_j$ | | | | İç mekan sıcaklığı 20°C ve dış mekan sıcaklığında kısmi yükte belirtilen ısıtma kapasitesi $T_j$ | | | |
| $T_j$ = – 7°C | Prated | N/A | kW | $T_j$ = – 7°C | $COP_d$ | N/A | - |
| $T_j$ = + 2°C | $P_{dh}$ | 13.3 | kW | $T_j$ = + 2°C | $COP_d$ | 3.33 | - |
| $T_j$ = + 7°C | $P_{dh}$ | 8.5 | kW | $T_j$ = + 7°C | $COP_d$ | 5.19 | - |
| $T_j$ = + 12°C | $P_{dh}$ | 4.8 | kW | $T_j$ = + 12°C | $COP_d$ | 7.95 | - |
| $T_j$ = bivalent sıcaklık | $P_{dh}$ | 8.5 | kW | $T_j$ = bivalent sıcaklık | $COP_d$ | 5.19 | - |
| $T_j$ = işletme sınır sıcaklığı | $P_{dh}$ | 13.3 | kW | $T_j$ = işletme sınır sıcaklığı | $COP_d$ | 3.33 | - |
| Hava-su ısı pompaları için: $T_j$ = – 15°C (Eğer TOL < – 20°C) | $P_{dh}$ | N/A | kW | Hava-su ısı pompaları için: Tj = – 15°C (if TOL < – 20°C) | $COP_d$ | N/A | - |
| Bivalent sıcaklık | $T_{biv}$ | 7 | °C | Hava-su ısı pompaları için: İşletme sınır sıcaklığı | TOL | 2 | °C |
| Isıtma için devir aralığı yetenekliği | $P_{cych}$ | N/A | kW | Döngü aralığı verimliliği | $COP_{cyc}$ | N/A | - |
| Değer kaybı katsayısı (**) | $C_{dh}$ | 0.9 | kW | Isıtma suyu işletme sınır sıcaklığı | WTOL | 65 | °C |
| Active mod dışındaki modlarda güç tüketimi | | | | İlave ısıtıcı | | | |
| Kapalı mod | $P_{OFF}$ | 0.014 | kW | | | | |
| Termostat-kapalı mod | $P_{TO}$ | 0.024 | kW | Nominal ısı çıkışı (**) | $p_{sup}$ | 0.0 | kw |
| Bekleme modu | $P_{SB}$ | 0.014 | kW | Enerji giriş türü | Elektrik | | |
| Krank kasa ısıtıcı modu | $P_{CK}$ | 0.000 | kW | | | | |

| **Diğer öğeler** | | | | | | | |
|---|---|---|---|---|---|---|---|
| Kapasite kontrolü | değişken | | | Hava-su ısı pompaları için: Nominal hava akış hızı, dış mekan | - | 6000 | $m^3/h$ |
| İç/dış mekan ses güç seviyesi | $L_{WA}$ | -/68 | dB | Su veya tuzlu su ile çalışan ısı pompaları için: Nominal tuzlu su veya su akış hızı, dış mekan ısı değiştirici | - | N/A | $m^3/h$ |
| Yıllık enerji tüketimi | $Q_{HE}$ | 2934 | kWh | | | | |
| Isı pompası kombi ısıtıcı için: | | | | | | | |
| **Bildirilen yük profili** | N/A | | | **Su ısıtma enerji verimliliği** | $\eta_{wh}$ | N/A | % |
| Günlük elektrik tüketimi | $Q_{elec}$ | N/A | kWh | Günlük yakıt tüketimi | $Q_{fuel}$ | N/A | kWh |
| Yıllık elektrik tüketimi | AEC | N/A | kWh | Yıllık yakıt tüketimi | AFC | N/A | GJ |
| İletişim bilgileri | Kılavuzun arka kapağına bakınız. | | | | | | |

(*) Isı pompası mekan ısıtıcıları ve ısı pompası kombi ısıtıcıları için, nominal ısı çıkışı (Prated) ısıtma tasarım yüküne (Pdesignh) eşittir ve ilave ısıtıcının (Psup) nominal ısı çıkışı, ilave ısıtma kapasitesine (sup(Tj)) eşittir.
(**) Eğer Cdh ölçümle belirlenmemişse, varsayılan bozunma katsayısı Cdh = 0.9'dur.

# Teknik Özellikler

| | |
|---|---|
| Model(s): | 16kW(ısınma 3kW);16kW |
| Hava-su ısı pompası | evet |
| Su-su ısı pompası | hayır |
| Tuzlu su-su ısı pompası | hayır |
| Düşük sıcaklık ısı pompası | hayır |
| İlave ısıtıcı ile donatılmış | evet (için 16kW(ısıtma 3kW))<br>hayır (için 16kW) |
| Isı pompası kombi ısıtıcı | hayır |
| Belirtilen iklim koşulu; | daha soğuk |
| Parametreler düşük sıcaklık uygulaması için belirtilmiştir; | |

| ÖĞE | Sembol | DEĞER | BİRİM | ÖĞE | Sembol | DEĞER | BİRİM |
|---|---|---|---|---|---|---|---|
| **Nominal ısı çıkışı (*)** | Prated | 14 | kW | **Mevsimsel mekan ısıtma enerji verimliliği** | $\eta_s$ | 156 | % |
| İç mekan sıcaklığı 20 °C ve dış mekan sıcaklığında kısmi yükte ısıtma için belirtilen kapasite $T_j$ | | | | İç mekan sıcaklığı 20°C ve dış mekan sıcaklığında kısmi yükte belirtilen ısıtma kapasitesi $T_j$ | | | |
| $T_j$ = – 7°C | $P_{dh}$ | 9.1 | kW | $T_j$ = – 7°C | $COP_d$ | 3.30 | - |
| $T_j$ = + 2°C | $P_{dh}$ | 5.0 | kW | $T_j$ = + 2°C | $COP_d$ | 4.87 | - |
| $T_j$ = + 7°C | $P_{dh}$ | 4.2 | kW | $T_j$ = + 7°C | $COP_d$ | 6.50 | - |
| $T_j$ = + 12°C | $P_{dh}$ | 3.7 | kW | $T_j$ = + 12°C | $COP_d$ | 7.59 | - |
| $T_j$ = bivalent sıcaklık | $P_{dh}$ | 11.3 | kW | $T_j$ = bivalent sıcaklık | $COP_d$ | 2.28 | - |
| $T_j$ = işletme sınır sıcaklığı | $P_{dh}$ | 9.8 | kW | $T_j$ = işletme sınır sıcaklığı | $COP_d$ | 1.89 | - |
| Hava-su ısı pompaları için: $T_j$ = – 15°C (Eğer TOL < – 20°C) | $P_{dh}$ | N/A | kW | Hava-su ısı pompaları için: Tj = – 15°C (if TOL < – 20°C) | $COP_d$ | N/A | - |
| Bivalent sıcaklık | $T_{biv}$ | -15 | °C | Hava-su ısı pompaları için: İşletme sınır sıcaklığı | TOL | -22 | °C |
| Isıtma için devir aralığı yetenekliği | $P_{cych}$ | N/A | kW | Döngü aralığı verimliliği | $COP_{cyc}$ | N/A | - |
| Değer kaybı katsayısı (**) | $C_{dh}$ | 0.9 | kW | Isıtma suyu işletme sınır sıcaklığı | WTOL | 65 | °C |
| Active mod dışındaki modlarda güç tüketimi | | | | İlave ısıtıcı | | | |
| Kapalı mod | $P_{OFF}$ | 0.014 | kW | | | | |
| Termostat-kapalı mod | $P_{TO}$ | 0.024 | kW | Nominal ısı çıkışı (**) | $p_{sup}$ | 4.2 | kw |
| Bekleme modu | $P_{SB}$ | 0.014 | kW | Enerji giriş türü | Elektrik | | |
| Krank kasa ısıtıcı modu | $P_{CK}$ | 0.000 | kW | | | | |

| **Diğer öğeler** | | | | | | | |
|---|---|---|---|---|---|---|---|
| Kapasite kontrolü | değişken | | | Hava-su ısı pompaları için: Nominal hava akış hızı, dış mekan | - | 6000 | $m^3/h$ |
| İç/dış mekan ses güç seviyesi | $L_{WA}$ | -/68 | dB | Su veya tuzlu su ile çalışan ısı pompaları için: Nominal tuzlu su veya su akış hızı, dış mekan ısı değiştirici | - | N/A | $m^3/h$ |
| Yıllık enerji tüketimi | $Q_{HE}$ | 8616 | kWh | | | | |
| Isı pompası kombi ısıtıcı için: | | | | | | | |
| **Bildirilen yük profili** | N/A | | | **Su ısıtma enerji verimliliği** | $\eta_{wh}$ | N/A | % |
| Günlük elektrik tüketimi | $Q_{elec}$ | N/A | kWh | Günlük yakıt tüketimi | $Q_{fuel}$ | N/A | kWh |
| Yıllık elektrik tüketimi | AEC | N/A | kWh | Yıllık yakıt tüketimi | AFC | N/A | GJ |
| İletişim bilgileri | Kılavuzun arka kapağına bakınız. | | | | | | |

(*) Isı pompası mekan ısıtıcıları ve ısı pompası kombi ısıtıcıları için, nominal ısı çıkışı (Prated) ısıtma tasarım yüküne (Pdesignh) eşittir ve ilave ısıtıcının (Psup) nominal ısı çıkışı, ilave ısıtma kapasitesine (sup(Tj)) eşittir.
(**) Eğer Cdh ölçümle belirlenmemişse, varsayılan bozunma katsayısı Cdh = 0.9'dur.

# Teknik Özellikler

| | |
|---|---|
| Model(s): | 16kW(ısınma 3kW);16kW |
| Hava-su ısı pompası | evet |
| Su-su ısı pompası | hayır |
| Tuzlu su-su ısı pompası | hayır |
| Düşük sıcaklık ısı pompası | hayır |
| İlave ısıtıcı ile donatılmış | evet (için 16kW(ısıtma 3kW))<br>hayır (için 16kW) |
| Isı pompası kombi ısıtıcı | hayır |
| Belirtilen iklim koşulu; | Ortalama |
| Parametreler orta sıcaklık uygulaması için belirtilmiştir. | |

| ÖĞE | Sembol | DEĞER | BİRİM | ÖĞE | Sembol | DEĞER | BİRİM |
|---|---|---|---|---|---|---|---|
| **Nominal ısı çıkışı (*)** | Prated | 13 | kW | **Mevsimsel mekan ısıtma enerji verimliliği** | $\eta_s$ | 136 | % |
| İç mekan sıcaklığı 20 °C ve dış mekan sıcaklığında kısmi yükte ısıtma için belirtilen kapasite $T_j$ | | | | İç mekan sıcaklığı 20°C ve dış mekan sıcaklığında kısmi yükte belirtilen ısıtma kapasitesi $T_j$ | | | |
| $T_j$ = – 7°C | $P_{dh}$ | 11.3 | kW | $T_j$ = – 7°C | $COP_d$ | 2.04 | - |
| $T_j$ = + 2°C | $P_{dh}$ | 7.3 | kW | $T_j$ = + 2°C | $COP_d$ | 3.31 | - |
| $T_j$ = + 7°C | $P_{dh}$ | 4.8 | kW | $T_j$ = + 7°C | $COP_d$ | 4.81 | - |
| $T_j$ = + 12°C | $P_{dh}$ | 4.0 | kW | $T_j$ = + 12°C | $COP_d$ | 7.35 | - |
| $T_j$ = bivalent sıcaklık | $P_{dh}$ | 11.3 | kW | $T_j$ = bivalent sıcaklık | $COP_d$ | 2.04 | - |
| $T_j$ = işletme sınır sıcaklığı | $P_{dh}$ | 11.2 | kW | $T_j$ = işletme sınır sıcaklığı | $COP_d$ | 1.72 | - |
| Hava-su ısı pompaları için: $T_j$ = – 15°C (Eğer TOL < – 20°C) | $P_{dh}$ | N/A | kW | Hava-su ısı pompaları için: Tj = – 15°C (if TOL < – 20°C) | $COP_d$ | N/A | - |
| Bivalent sıcaklık | $T_{biv}$ | -7 | °C | Hava-su ısı pompaları için: İşletme sınır sıcaklığı | TOL | -10 | °C |
| Isıtma için devir aralığı yetenekliği | $P_{cych}$ | N/A | kW | Döngü aralığı verimliliği | $COP_{cyc}$ | N/A | - |
| Değer kaybı katsayısı (**) | $C_{dh}$ | 0.9 | kW | Isıtma suyu işletme sınır sıcaklığı | WTOL | 65 | °C |
| Active mod dışındaki modlarda güç tüketimi | | | | İlave ısıtıcı | | | |
| Kapalı mod | $P_{OFF}$ | 0.014 | kW | | | | |
| Termostat-kapalı mod | $P_{TO}$ | 0.024 | kW | Nominal ısı çıkışı (**) | $p_{sup}$ | 1.8 | kw |
| Bekleme modu | $P_{SB}$ | 0.014 | kW | Enerji giriş türü | Elektrik | | |
| Krank kasa ısıtıcı modu | $P_{CK}$ | 0.000 | kW | | | | |

| | | | | | | | |
|---|---|---|---|---|---|---|---|
| **Diğer öğeler** | | | | | | | |
| Kapasite kontrolü | değişken | | | Hava-su ısı pompaları için: Nominal hava akış hızı, dış mekan | - | 6000 | $m^3/h$ |
| İç/dış mekan ses güç seviyesi | $L_{WA}$ | -/68 | dB | Su veya tuzlu su ile çalışan ısı pompaları için: Nominal tuzlu su veya su akış hızı, dış mekan ısı değiştirici | - | N/A | $m^3/h$ |
| Yıllık enerji tüketimi | $Q_{HE}$ | 7593 | kWh | | | | |
| Isı pompası kombi ısıtıcı için: | | | | | | | |
| **Bildirilen yük profili** | N/A | | | **Su ısıtma enerji verimliliği** | $\eta_{wh}$ | N/A | % |
| Günlük elektrik tüketimi | $Q_{elec}$ | N/A | kWh | Günlük yakıt tüketimi | $Q_{fuel}$ | N/A | kWh |
| Yıllık elektrik tüketimi | AEC | N/A | kWh | Yıllık yakıt tüketimi | AFC | N/A | GJ |
| İletişim bilgileri | Kılavuzun arka kapağına bakınız. | | | | | | |

(*) Isı pompası mekan ısıtıcıları ve ısı pompası kombi ısıtıcıları için, nominal ısı çıkışı (Prated) ısıtma tasarım yüküne (Pdesignh) eşittir ve ilave ısıtıcının (Psup) nominal ısı çıkışı, ilave ısıtma kapasitesine (sup(Tj)) eşittir.
(**) Eğer Cdh ölçümle belirlenmemişse, varsayılan bozunma katsayısı Cdh = 0.9'dur.

# Teknik Özellikler

| | |
|---|---|
| Model(s): | 16kW(ısınma 3kW);16kW |
| Hava-su ısı pompası | evet |
| Su-su ısı pompası | hayır |
| Tuzlu su-su ısı pompası | hayır |
| Düşük sıcaklık ısı pompası | hayır |
| İlave ısıtıcı ile donatılmış | evet (için 16kW(ısıtma 3kW))<br>hayır (için 16kW) |
| Isı pompası kombi ısıtıcı | hayır |
| Belirtilen iklim koşulu; | daha sıcak |
| Parametreler orta sıcaklık uygulaması için belirtilmiştir. | |

| ÖĞE | Sembol | DEĞER | BİRİM | ÖĞE | Sembol | DEĞER | BİRİM |
|---|---|---|---|---|---|---|---|
| **Nominal ısı çıkışı (*)** | Prated | 14 | kW | **Mevsimsel mekan ısıtma enerji verimliliği** | $\eta_s$ | 171 | % |
| İç mekan sıcaklığı 20 °C ve dış mekan sıcaklığında kısmi yükte ısıtma için belirtilen kapasite $T_j$ | | | | İç mekan sıcaklığı 20°C ve dış mekan sıcaklığında kısmi yükte belirtilen ısıtma kapasitesi $T_j$ | | | |
| $T_j$ = – 7°C | $P_{dh}$ | N/A | kW | $T_j$ = – 7°C | $COP_d$ | N/A | - |
| $T_j$ = + 2°C | $P_{dh}$ | 13.2 | kW | $T_j$ = + 2°C | $COP_d$ | 2.30 | - |
| $T_j$ = + 7°C | $P_{dh}$ | 9.0 | kW | $T_j$ = + 7°C | $COP_d$ | 3.68 | - |
| $T_j$ = + 12°C | $P_{dh}$ | 4.1 | kW | $T_j$ = + 12°C | $COP_d$ | 5.80 | - |
| $T_j$ = bivalent sıcaklık | $P_{dh}$ | 9.0 | kW | $T_j$ = bivalent sıcaklık | $COP_d$ | 3.68 | - |
| $T_j$ = işletme sınır sıcaklığı | $P_{dh}$ | 13.2 | kW | $T_j$ = işletme sınır sıcaklığı | $COP_d$ | 2.30 | - |
| Hava-su ısı pompaları için: $T_j$ = – 15°C (Eğer TOL < – 20°C) | $P_{dh}$ | N/A | kW | Hava-su ısı pompaları için: Tj = – 15°C (if TOL < – 20°C) | $COP_d$ | N/A | - |
| Bivalent sıcaklık | $T_{biv}$ | 7 | °C | Hava-su ısı pompaları için: İşletme sınır sıcaklığı | TOL | 2 | °C |
| Isıtma için devir aralığı yetenekliği | $P_{cych}$ | N/A | kW | Döngü aralığı verimliliği | $COP_{cyc}$ | N/A | - |
| Değer kaybı katsayısı (**) | $C_{dh}$ | 0.9 | kW | Isıtma suyu işletme sınır sıcaklığı | WTOL | 65 | °C |
| Active mod dışındaki modlarda güç tüketimi | | | | İlave ısıtıcı | | | |
| Kapalı mod | $P_{OFF}$ | 0.014 | kW | | | | |
| Termostat-kapalı mod | $P_{TO}$ | 0.024 | kW | Nominal ısı çıkışı (**) | $p_{sup}$ | 0.8 | kw |
| Bekleme modu | $P_{SB}$ | 0.014 | kW | Enerji giriş türü | Elektrik | | |
| Krank kasa ısıtıcı modu | $P_{CK}$ | 0.000 | kW | | | | |

| | | | | | | | |
|---|---|---|---|---|---|---|---|
| **Diğer öğeler** | | | | | | | |
| Kapasite kontrolü | değişken | | | Hava-su ısı pompaları için: Nominal hava akış hızı, dış mekan | - | 6000 | $m^3/h$ |
| İç/dış mekan ses güç seviyesi | $L_{WA}$ | -/68 | dB | Su veya tuzlu su ile çalışan ısı pompaları için: Nominal tuzlu su veya su akış hızı, dış mekan ısı değiştirici | - | N/A | $m^3/h$ |
| Yıllık enerji tüketimi | $Q_{HE}$ | 4329 | kWh | | | | |
| Isı pompası kombi ısıtıcı için: | | | | | | | |
| **Bildirilen yük profili** | N/A | | | **Su ısıtma enerji verimliliği** | $\eta_{wh}$ | N/A | % |
| Günlük elektrik tüketimi | $Q_{elec}$ | N/A | kWh | Günlük yakıt tüketimi | $Q_{fuel}$ | N/A | kWh |
| Yıllık elektrik tüketimi | AEC | N/A | kWh | Yıllık yakıt tüketimi | AFC | N/A | GJ |
| İletişim bilgileri | Kılavuzun arka kapağına bakınız. | | | | | | |

(*) Isı pompası mekan ısıtıcıları ve ısı pompası kombi ısıtıcıları için, nominal ısı çıkışı (Prated) ısıtma tasarım yüküne (Pdesignh) eşittir ve ilave ısıtıcının (Psup) nominal ısı çıkışı, ilave ısıtma kapasitesine (sup(Tj)) eşittir.
(**) Eğer Cdh ölçümle belirlenmemişse, varsayılan bozunma katsayısı Cdh = 0.9'dur.

# Teknik Özellikler

| | |
|---|---|
| Model(s): | 16kW(ısınma 3kW);16kW |
| Hava-su ısı pompası | evet |
| Su-su ısı pompası | hayır |
| Tuzlu su-su ısı pompası | hayır |
| Düşük sıcaklık ısı pompası | hayır |
| İlave ısıtıcı ile donatılmış | evet (için 16kW(ısıtma 3kW))<br>hayır (için 16kW) |
| Isı pompası kombi ısıtıcı | hayır |
| Belirtilen iklim koşulu; | daha soğuk |
| Parametreler orta sıcaklık uygulaması için belirtilmiştir. | |

| ÖĞE | Sembol | DEĞER | BİRİM | ÖĞE | Sembol | DEĞER | BİRİM |
|---|---|---|---|---|---|---|---|
| **Nominal ısı çıkışı (*)** | Prated | 12 | kW | **Mevsimsel mekan ısıtma enerji verimliliği** | $\eta_s$ | 121 | % |
| İç mekan sıcaklığı 20 °C ve dış mekan sıcaklığında kısmi yükte ısıtma için belirtilen kapasite $T_j$ | | | | İç mekan sıcaklığı 20°C ve dış mekan sıcaklığında kısmi yükte belirtilen ısıtma kapasitesi $T_j$ | | | |
| $T_j$ = – 7°C | $P_{dh}$ | 7.7 | kW | $T_j$ = – 7°C | $COP_d$ | 2.61 | - |
| $T_j$ = + 2°C | $P_{dh}$ | 4.5 | kW | $T_j$ = + 2°C | $COP_d$ | 3.78 | - |
| $T_j$ = + 7°C | $P_{dh}$ | 3.2 | kW | $T_j$ = + 7°C | $COP_d$ | 4.87 | - |
| $T_j$ = + 12°C | $P_{dh}$ | 3.6 | kW | $T_j$ = + 12°C | $COP_d$ | 6.39 | - |
| $T_j$ = bivalent sıcaklık | $P_{dh}$ | 9.6 | kW | $T_j$ = bivalent sıcaklık | $COP_d$ | 1.84 | - |
| $T_j$ = işletme sınır sıcaklığı | $P_{dh}$ | 5.1 | kW | $T_j$ = işletme sınır sıcaklığı | $COP_d$ | 1.04 | - |
| Hava-su ısı pompaları için: $T_j$ = – 15°C (Eğer TOL < – 20°C) | $P_{dh}$ | N/A | kW | Hava-su ısı pompaları için: Tj = – 15°C (if TOL < – 20°C) | $COP_d$ | N/A | - |
| Bivalent sıcaklık | $T_{biv}$ | -15 | °C | Hava-su ısı pompaları için: İşletme sınır sıcaklığı | TOL | -22 | °C |
| Isıtma için devir aralığı yetenekliği | $P_{cych}$ | N/A | kW | Döngü aralığı verimliliği | $COP_{cyc}$ | N/A | - |
| Değer kaybı katsayısı (**) | $C_{dh}$ | 0.9 | kW | Isıtma suyu işletme sınır sıcaklığı | WTOL | 65 | °C |
| Active mod dışındaki modlarda güç tüketimi | | | | İlave ısıtıcı | | | |
| Kapalı mod | $P_{OFF}$ | 0.014 | kW | | | | |
| Termostat-kapalı mod | $P_{TO}$ | 0.024 | kW | Nominal ısı çıkışı (**) | $p_{sup}$ | 6.9 | kw |
| Bekleme modu | $P_{SB}$ | 0.014 | kW | Enerji giriş türü | Elektrik | | |
| Krank kasa ısıtıcı modu | $P_{CK}$ | 0.000 | kW | | | | |

| | | | | | | | |
|---|---|---|---|---|---|---|---|
| **Diğer öğeler** | | | | | | | |
| Kapasite kontrolü | değişken | | | Hava-su ısı pompaları için: Nominal hava akış hızı, dış mekan | - | 6000 | $m^3/h$ |
| İç/dış mekan ses güç seviyesi | $L_{WA}$ | -/68 | dB | Su veya tuzlu su ile çalışan ısı pompaları için: Nominal tuzlu su veya su akış hızı, dış mekan ısı değiştirici | - | N/A | $m^3/h$ |
| Yıllık enerji tüketimi | $Q_{HE}$ | 9389 | kWh | | | | |
| Isı pompası kombi ısıtıcı için: | | | | | | | |
| **Bildirilen yük profili** | N/A | | | **Su ısıtma enerji verimliliği** | $\eta_{wh}$ | N/A | % |
| Günlük elektrik tüketimi | $Q_{elec}$ | N/A | kWh | Günlük yakıt tüketimi | $Q_{fuel}$ | N/A | kWh |
| Yıllık elektrik tüketimi | AEC | N/A | kWh | Yıllık yakıt tüketimi | AFC | N/A | GJ |
| İletişim bilgileri | Kılavuzun arka kapağına bakınız. | | | | | | |

(*) Isı pompası mekan ısıtıcıları ve ısı pompası kombi ısıtıcıları için, nominal ısı çıkışı (Prated) ısıtma tasarım yüküne (Pdesignh) eşittir ve ilave ısıtıcının (Psup) nominal ısı çıkışı, ilave ısıtma kapasitesine (sup(Tj)) eşittir.
(**) Eğer Cdh ölçümle belirlenmemişse, varsayılan bozunma katsayısı Cdh = 0.9'dur.

# Teknik Özellikler

| | |
|---|---|
| Model(s): | 3-PH 12kW(ısınma 9kW);3-PH 12kW(ısınma 6kW);3-PH 12kW(ısınma 3kW);3-PH 12kW |
| Hava-su ısı pompası | evet |
| Su-su ısı pompası | hayır |
| Tuzlu su-su ısı pompası | hayır |
| Düşük sıcaklık ısı pompası | hayır |
| İlave ısıtıcı ile donatılmış | evet (için 3-PH 12kW(ısıtma 9kW));(3-PH 12kW(ısıtma 6kW);(3-PH 12kW(ısıtma 3kW);hayır (için 3-PH 12kW) |
| Isı pompası kombi ısıtıcı | hayır |
| Belirtilen iklim koşulu; | Ortalama |
| Parametreler düşük sıcaklık uygulaması için belirtilmiştir; | |

| ÖĞE | Sembol | DEĞER | BİRİM | ÖĞE | Sembol | DEĞER | BİRİM |
|---|---|---|---|---|---|---|---|
| **Nominal ısı çıkışı (*)** | Prated | 12 | kW | **Mevsimsel mekan ısıtma enerji verimliliği** | $\eta_s$ | 187 | % |
| İç mekan sıcaklığı 20 °C ve dış mekan sıcaklığında kısmi yükte ısıtma için belirtilen kapasite $T_j$ | | | | İç mekan sıcaklığı 20°C ve dış mekan sıcaklığında kısmi yükte belirtilen ısıtma kapasitesi $T_j$ | | | |
| $T_j$ = – 7°C | $P_{dh}$ | 10.7 | kW | $T_j$ = – 7°C | $COP_d$ | 2.90 | - |
| $T_j$ = + 2°C | $P_{dh}$ | 7.0 | kW | $T_j$ = + 2°C | $COP_d$ | 4.53 | - |
| $T_j$ = + 7°C | $P_{dh}$ | 4.6 | kW | $T_j$ = + 7°C | $COP_d$ | 6.65 | - |
| $T_j$ = + 12°C | $P_{dh}$ | 4.2 | kW | $T_j$ = + 12°C | $COP_d$ | 8.92 | - |
| $T_j$ = bivalent sıcaklık | $P_{dh}$ | 10.7 | kW | $T_j$ = bivalent sıcaklık | $COP_d$ | 2.90 | - |
| $T_j$ = işletme sınır sıcaklığı | $P_{dh}$ | 11.4 | kW | $T_j$ = işletme sınır sıcaklığı | $COP_d$ | 2.63 | - |
| Hava-su ısı pompaları için: $T_j$ = – 15°C (Eğer TOL < – 20°C) | $P_{dh}$ | N/A | kW | Hava-su ısı pompaları için: Tj = – 15°C (if TOL < – 20°C) | $COP_d$ | N/A | - |
| Bivalent sıcaklık | $T_{biv}$ | -7 | °C | Hava-su ısı pompaları için: İşletme sınır sıcaklığı | TOL | -10 | °C |
| Isıtma için devir aralığı yetenekliği | $P_{cych}$ | N/A | kW | Döngü aralığı verimliliği | $COP_{cyc}$ | N/A | - |
| Değer kaybı katsayısı (**) | $C_{dh}$ | 0.9 | kW | Isıtma suyu işletme sınır sıcaklığı | WTOL | 65 | °C |
| Active mod dışındaki modlarda güç tüketimi | | | | İlave ısıtıcı | | | |
| Kapalı mod | $P_{OFF}$ | 0.014 | kW | | | | |
| Termostat-kapalı mod | $P_{TO}$ | 0.024 | kW | Nominal ısı çıkışı (**) | $p_{sup}$ | 0.6 | kw |
| Bekleme modu | $P_{SB}$ | 0.014 | kW | Enerji giriş türü | Elektrik | | |
| Krank kasa ısıtıcı modu | $P_{CK}$ | 0.000 | kW | | | | |

| **Diğer öğeler** | | | | | | | |
|---|---|---|---|---|---|---|---|
| Kapasite kontrolü | değişken | | | Hava-su ısı pompaları için: Nominal hava akış hızı, dış mekan | - | 5000 | $m^3/h$ |
| İç/dış mekan ses güç seviyesi | $L_{WA}$ | -/64 | dB | Su veya tuzlu su ile çalışan ısı pompaları için: Nominal tuzlu su veya su akış hızı, dış mekan ısı değiştirici | - | N/A | $m^3/h$ |
| Yıllık enerji tüketimi | $Q_{HE}$ | 5256 | kWh | | | | |
| Isı pompası kombi ısıtıcı için: | | | | | | | |
| **Bildirilen yük profili** | N/A | | | **Su ısıtma enerji verimliliği** | $\eta_{wh}$ | N/A | % |
| Günlük elektrik tüketimi | $Q_{elec}$ | N/A | kWh | Günlük yakıt tüketimi | $Q_{fuel}$ | N/A | kWh |
| Yıllık elektrik tüketimi | AEC | N/A | kWh | Yıllık yakıt tüketimi | AFC | N/A | GJ |
| İletişim bilgileri | Kılavuzun arka kapağına bakınız. | | | | | | |

(*) Isı pompası mekan ısıtıcıları ve ısı pompası kombi ısıtıcıları için, nominal ısı çıkışı (Prated) ısıtma tasarım yüküne (Pdesignh) eşittir ve ilave ısıtıcının (Psup) nominal ısı çıkışı, ilave ısıtma kapasitesine (sup(Tj)) eşittir.
(**) Eğer Cdh ölçümle belirlenmemişse, varsayılan bozunma katsayısı Cdh = 0.9'dur.

# Teknik Özellikler

| | |
|---|---|
| Model(s): | 3-PH 12kW(ısınma 9kW);3-PH 12kW(ısınma 6kW);3-PH 12kW(ısınma 3kW);3-PH 12kW |
| Hava-su ısı pompası | evet |
| Su-su ısı pompası | hayır |
| Tuzlu su-su ısı pompası | hayır |
| Düşük sıcaklık ısı pompası | hayır |
| İlave ısıtıcı ile donatılmış | evet (için 3-PH 12kW(ısıtma 9kW));(3-PH 12kW(ısıtma 6kW);(3-PH 12kW(ısıtma 3kW);hayır (için 3-PH 12kW) |
| Isı pompası kombi ısıtıcı | hayır |
| Belirtilen iklim koşulu; | daha sıcak |
| Parametreler düşük sıcaklık uygulaması için belirtilmiştir; | |

| ÖĞE | Sembol | DEĞER | BİRİM | ÖĞE | Sembol | DEĞER | BİRİM |
|---|---|---|---|---|---|---|---|
| **Nominal ısı çıkışı (*)** | Prated | 11 | kW | **Mevsimsel mekan ısıtma enerji verimliliği** | $\eta_s$ | 253 | % |
| İç mekan sıcaklığı 20 °C ve dış mekan sıcaklığında kısmi yükte ısıtma için belirtilen kapasite $T_j$ | | | | İç mekan sıcaklığı 20°C ve dış mekan sıcaklığında kısmi yükte belirtilen ısıtma kapasitesi $T_j$ | | | |
| $T_j$ = – 7°C | $P_{dh}$ | N/A | kW | $T_j$ = – 7°C | $COP_d$ | N/A | - |
| $T_j$ = + 2°C | $P_{dh}$ | 11.1 | kW | $T_j$ = + 2°C | $COP_d$ | 3.62 | - |
| $T_j$ = + 7°C | $P_{dh}$ | 7.2 | kW | $T_j$ = + 7°C | $COP_d$ | 5.64 | - |
| $T_j$ = + 12°C | $P_{dh}$ | 4.7 | kW | $T_j$ = + 12°C | $COP_d$ | 8.34 | - |
| $T_j$ = bivalent sıcaklık | $P_{dh}$ | 7.2 | kW | $T_j$ = bivalent sıcaklık | $COP_d$ | 5.64 | - |
| $T_j$ = işletme sınır sıcaklığı | $P_{dh}$ | 11.1 | kW | $T_j$ = işletme sınır sıcaklığı | $COP_d$ | 3.62 | - |
| Hava-su ısı pompaları için: $T_j$ = – 15°C (Eğer TOL < – 20°C) | $P_{dh}$ | N/A | kW | Hava-su ısı pompaları için: Tj = – 15°C (if TOL < – 20°C) | $COP_d$ | N/A | - |
| Bivalent sıcaklık | $T_{biv}$ | 7 | °C | Hava-su ısı pompaları için: İşletme sınır sıcaklığı | TOL | 2 | °C |
| Isıtma için devir aralığı yetenekliği | $P_{cych}$ | N/A | kW | Döngü aralığı verimliliği | $COP_{cyc}$ | N/A | - |
| Değer kaybı katsayısı (**) | $C_{dh}$ | 0.9 | kW | Isıtma suyu işletme sınır sıcaklığı | WTOL | 65 | °C |
| Active mod dışındaki modlarda güç tüketimi | | | | İlave ısıtıcı | | | |
| Kapalı mod | $P_{OFF}$ | 0.014 | kW | | | | |
| Termostat-kapalı mod | $P_{TO}$ | 0.024 | kW | Nominal ısı çıkışı (**) | $p_{sup}$ | 0.0 | kw |
| Bekleme modu | $P_{SB}$ | 0.014 | kW | Enerji giriş türü | Elektrik | | |
| Krank kasa ısıtıcı modu | $P_{CK}$ | 0.000 | kW | | | | |

| **Diğer öğeler** | | | | | | | |
|---|---|---|---|---|---|---|---|
| Kapasite kontrolü | değişken | | | Hava-su ısı pompaları için: Nominal hava akış hızı, dış mekan | - | 5000 | $m^3/h$ |
| İç/dış mekan ses güç seviyesi | $L_{WA}$ | -/64 | dB | Su veya tuzlu su ile çalışan ısı pompaları için: Nominal tuzlu su veya su akış hızı, dış mekan ısı değiştirici | - | N/A | $m^3/h$ |
| Yıllık enerji tüketimi | $Q_{HE}$ | 2325 | kWh | | | | |
| Isı pompası kombi ısıtıcı için: | | | | | | | |
| **Bildirilen yük profili** | N/A | | | **Su ısıtma enerji verimliliği** | $\eta_{wh}$ | N/A | % |
| Günlük elektrik tüketimi | $Q_{elec}$ | N/A | kWh | Günlük yakıt tüketimi | $Q_{fuel}$ | N/A | kWh |
| Yıllık elektrik tüketimi | AEC | N/A | kWh | Yıllık yakıt tüketimi | AFC | N/A | GJ |
| İletişim bilgileri | Kılavuzun arka kapağına bakınız. | | | | | | |

(*) Isı pompası mekan ısıtıcıları ve ısı pompası kombi ısıtıcıları için, nominal ısı çıkışı (Prated) ısıtma tasarım yüküne (Pdesignh) eşittir ve ilave ısıtıcının (Psup) nominal ısı çıkışı, ilave ısıtma kapasitesine (sup(Tj)) eşittir.
(**) Eğer Cdh ölçümle belirlenmemişse, varsayılan bozunma katsayısı Cdh = 0.9'dur.

# Teknik Özellikler

| | |
|---|---|
| Model(s): | 3-PH 12kW(ısınma 9kW);3-PH 12kW(ısınma 6kW);3-PH 12kW(ısınma 3kW);3-PH 12kW |
| Hava-su ısı pompası | evet |
| Su-su ısı pompası | hayır |
| Tuzlu su-su ısı pompası | hayır |
| Düşük sıcaklık ısı pompası | hayır |
| İlave ısıtıcı ile donatılmış | evet (için 3-PH 12kW(ısıtma 9kW));(3-PH 12kW(ısıtma 6kW);(3-PH 12kW(ısıtma 3kW);hayır (için 3-PH 12kW) |
| Isı pompası kombi ısıtıcı | hayır |
| Belirtilen iklim koşulu; | daha soğuk |
| Parametreler düşük sıcaklık uygulaması için belirtilmiştir; | |

| ÖĞE | Sembol | DEĞER | BİRİM | ÖĞE | Sembol | DEĞER | BİRİM |
|---|---|---|---|---|---|---|---|
| **Nominal ısı çıkışı (*)** | Prated | 11 | kW | **Mevsimsel mekan ısıtma enerji verimliliği** | $\eta_s$ | 163 | % |
| İç mekan sıcaklığı 20 °C ve dış mekan sıcaklığında kısmi yükte ısıtma için belirtilen kapasite $T_j$ | | | | İç mekan sıcaklığı 20°C ve dış mekan sıcaklığında kısmi yükte belirtilen ısıtma kapasitesi $T_j$ | | | |
| $T_j$ = – 7°C | $P_{dh}$ | 7.2 | kW | $T_j$ = – 7°C | $COP_d$ | 3.51 | - |
| $T_j$ = + 2°C | $P_{dh}$ | 4.2 | kW | $T_j$ = + 2°C | $COP_d$ | 5.06 | - |
| $T_j$ = + 7°C | $P_{dh}$ | 3.2 | kW | $T_j$ = + 7°C | $COP_d$ | 6.20 | - |
| $T_j$ = + 12°C | $P_{dh}$ | 3.6 | kW | $T_j$ = + 12°C | $COP_d$ | 8.19 | - |
| $T_j$ = bivalent sıcaklık | $P_{dh}$ | 9.3 | kW | $T_j$ = bivalent sıcaklık | $COP_d$ | 2.59 | - |
| $T_j$ = işletme sınır sıcaklığı | $P_{dh}$ | 7.1 | kW | $T_j$ = işletme sınır sıcaklığı | $COP_d$ | 2.08 | - |
| Hava-su ısı pompaları için: $T_j$ = – 15°C (Eğer TOL < – 20°C) | $P_{dh}$ | N/A | kW | Hava-su ısı pompaları için: Tj = – 15°C (if TOL < – 20°C) | $COP_d$ | N/A | - |
| Bivalent sıcaklık | $T_{biv}$ | -15 | °C | Hava-su ısı pompaları için: İşletme sınır sıcaklığı | TOL | -22 | °C |
| Isıtma için devir aralığı yetenekliği | $P_{cych}$ | N/A | kW | Döngü aralığı verimliliği | $COP_{cyc}$ | N/A | - |
| Değer kaybı katsayısı (**) | $C_{dh}$ | 0.9 | kW | Isıtma suyu işletme sınır sıcaklığı | WTOL | 65 | °C |
| Active mod dışındaki modlarda güç tüketimi | | | | İlave ısıtıcı | | | |
| Kapalı mod | $P_{OFF}$ | 0.014 | kW | | | | |
| Termostat-kapalı mod | $P_{TO}$ | 0.024 | kW | Nominal ısı çıkışı (**) | $p_{sup}$ | 3.9 | kw |
| Bekleme modu | $P_{SB}$ | 0.014 | kW | Enerji giriş türü | Elektrik | | |
| Krank kasa ısıtıcı modu | $P_{CK}$ | 0.000 | kW | | | | |

| **Diğer öğeler** | | | | | | | |
|---|---|---|---|---|---|---|---|
| Kapasite kontrolü | değişken | | | Hava-su ısı pompaları için: Nominal hava akış hızı, dış mekan | - | 5000 | $m^3/h$ |
| İç/dış mekan ses güç seviyesi | $L_{WA}$ | -/64 | dB | Su veya tuzlu su ile çalışan ısı pompaları için: Nominal tuzlu su veya su akış hızı, dış mekan ısı değiştirici | - | N/A | $m^3/h$ |
| Yıllık enerji tüketimi | $Q_{HE}$ | 6738 | kWh | | | | |
| Isı pompası kombi ısıtıcı için: | | | | | | | |
| **Bildirilen yük profili** | N/A | | | **Su ısıtma enerji verimliliği** | $\eta_{wh}$ | N/A | % |
| Günlük elektrik tüketimi | $Q_{elec}$ | N/A | kWh | Günlük yakıt tüketimi | $Q_{fuel}$ | N/A | kWh |
| Yıllık elektrik tüketimi | AEC | N/A | kWh | Yıllık yakıt tüketimi | AFC | N/A | GJ |
| İletişim bilgileri | Kılavuzun arka kapağına bakınız. | | | | | | |

(*) Isı pompası mekan ısıtıcıları ve ısı pompası kombi ısıtıcıları için, nominal ısı çıkışı (Prated) ısıtma tasarım yüküne (Pdesignh) eşittir ve ilave ısıtıcının (Psup) nominal ısı çıkışı, ilave ısıtma kapasitesine (sup(Tj)) eşittir.
(**) Eğer Cdh ölçümle belirlenmemişse, varsayılan bozunma katsayısı Cdh = 0.9'dur.

# Teknik Özellikler

| | |
|---|---|
| Model(s): | 3-PH 12kW(ısınma 9kW);3-PH 12kW(ısınma 6kW);3-PH 12kW(ısınma 3kW);3-PH 12kW |
| Hava-su ısı pompası | evet |
| Su-su ısı pompası | hayır |
| Tuzlu su-su ısı pompası | hayır |
| Düşük sıcaklık ısı pompası | hayır |
| İlave ısıtıcı ile donatılmış | evet (için 3-PH 12kW(ısıtma 9kW));(3-PH 12kW(ısıtma 6kW);(3-PH 12kW(ısıtma 3kW);hayır (için 3-PH 12kW) |
| Isı pompası kombi ısıtıcı | hayır |
| Belirtilen iklim koşulu; | Ortalama |
| Parametreler orta sıcaklık uygulaması için belirtilmiştir. | |

| ÖĞE | Sembol | DEĞER | BİRİM | ÖĞE | Sembol | DEĞER | BİRİM |
|---|---|---|---|---|---|---|---|
| **Nominal ısı çıkışı (*)** | Prated | 12 | kW | **Mevsimsel mekan ısıtma enerji verimliliği** | $\eta_s$ | 138 | % |
| İç mekan sıcaklığı 20 °C ve dış mekan sıcaklığında kısmi yükte ısıtma için belirtilen kapasite $T_j$ | | | | İç mekan sıcaklığı 20°C ve dış mekan sıcaklığında kısmi yükte belirtilen ısıtma kapasitesi $T_j$ | | | |
| $T_j$ = – 7°C | $P_{dh}$ | 10.7 | kW | $T_j$ = – 7°C | $COP_d$ | 2.13 | - |
| $T_j$ = + 2°C | $P_{dh}$ | 6.6 | kW | $T_j$ = + 2°C | $COP_d$ | 3.33 | - |
| $T_j$ = + 7°C | $P_{dh}$ | 4.4 | kW | $T_j$ = + 7°C | $COP_d$ | 4.88 | - |
| $T_j$ = + 12°C | $P_{dh}$ | 4.0 | kW | $T_j$ = + 12°C | $COP_d$ | 7.67 | - |
| $T_j$ = bivalent sıcaklık | $P_{dh}$ | 10.7 | kW | $T_j$ = bivalent sıcaklık | $COP_d$ | 2.13 | - |
| $T_j$ = işletme sınır sıcaklığı | $P_{dh}$ | 10.0 | kW | $T_j$ = işletme sınır sıcaklığı | $COP_d$ | 1.82 | - |
| Hava-su ısı pompaları için: $T_j$ = – 15°C (Eğer TOL < – 20°C) | $P_{dh}$ | N/A | kW | Hava-su ısı pompaları için: Tj = – 15°C (if TOL < – 20°C) | $COP_d$ | N/A | - |
| Bivalent sıcaklık | $T_{biv}$ | -7 | °C | Hava-su ısı pompaları için: İşletme sınır sıcaklığı | TOL | -10 | °C |
| Isıtma için devir aralığı yetenekliği | $P_{cych}$ | N/A | kW | Döngü aralığı verimliliği | $COP_{cyc}$ | N/A | - |
| Değer kaybı katsayısı (**) | $C_{dh}$ | 0.9 | kW | Isıtma suyu işletme sınır sıcaklığı | WTOL | 65 | °C |
| Active mod dışındaki modlarda güç tüketimi | | | | İlave ısıtıcı | | | |
| Kapalı mod | $P_{OFF}$ | 0.014 | kW | | | | |
| Termostat-kapalı mod | $P_{TO}$ | 0.024 | kW | Nominal ısı çıkışı (**) | $p_{sup}$ | 2.0 | kw |
| Bekleme modu | $P_{SB}$ | 0.014 | kW | Enerji giriş türü | Elektrik | | |
| Krank kasa ısıtıcı modu | $P_{CK}$ | 0.000 | kW | | | | |

| | | | | | | | |
|---|---|---|---|---|---|---|---|
| **Diğer öğeler** | | | | | | | |
| Kapasite kontrolü | değişken | | | Hava-su ısı pompaları için: Nominal hava akış hızı, dış mekan | - | 5000 | $m^3/h$ |
| İç/dış mekan ses güç seviyesi | $L_{WA}$ | -/64 | dB | Su veya tuzlu su ile çalışan ısı pompaları için: Nominal tuzlu su veya su akış hızı, dış mekan ısı değiştirici | - | N/A | $m^3/h$ |
| Yıllık enerji tüketimi | $Q_{HE}$ | 7085 | kWh | | | | |
| Isı pompası kombi ısıtıcı için: | | | | | | | |
| **Bildirilen yük profili** | N/A | | | **Su ısıtma enerji verimliliği** | $\eta_{wh}$ | N/A | % |
| Günlük elektrik tüketimi | $Q_{elec}$ | N/A | kWh | Günlük yakıt tüketimi | $Q_{fuel}$ | N/A | kWh |
| Yıllık elektrik tüketimi | AEC | N/A | kWh | Yıllık yakıt tüketimi | AFC | N/A | GJ |
| İletişim bilgileri | Kılavuzun arka kapağına bakınız. | | | | | | |

(*) Isı pompası mekan ısıtıcıları ve ısı pompası kombi ısıtıcıları için, nominal ısı çıkışı (Prated) ısıtma tasarım yüküne (Pdesignh) eşittir ve ilave ısıtıcının (Psup) nominal ısı çıkışı, ilave ısıtma kapasitesine (sup(Tj)) eşittir.
(**) Eğer Cdh ölçümle belirlenmemişse, varsayılan bozunma katsayısı Cdh = 0.9'dur.

# Teknik Özellikler

| | |
|---|---|
| Model(s): | 3-PH 12kW(ısınma 9kW);3-PH 12kW(ısınma 6kW);3-PH 12kW(ısınma 3kW);3-PH 12kW |
| Hava-su ısı pompası | evet |
| Su-su ısı pompası | hayır |
| Tuzlu su-su ısı pompası | hayır |
| Düşük sıcaklık ısı pompası | hayır |
| İlave ısıtıcı ile donatılmış | evet (için 3-PH 12kW(ısıtma 9kW));(3-PH 12kW(ısıtma 6kW);(3-PH 12kW(ısıtma 3kW);hayır (için 3-PH 12kW) |
| Isı pompası kombi ısıtıcı | hayır |
| Belirtilen iklim koşulu; | daha sıcak |
| Parametreler orta sıcaklık uygulaması için belirtilmiştir. | |

| ÖĞE | Sembol | DEĞER | BİRİM | ÖĞE | Sembol | DEĞER | BİRİM |
|---|---|---|---|---|---|---|---|
| **Nominal ısı çıkışı (*)** | Prated | 12 | kW | **Mevsimsel mekan ısıtma enerji verimliliği** | $\eta_s$ | 175 | % |
| İç mekan sıcaklığı 20 °C ve dış mekan sıcaklığında kısmi yükte ısıtma için belirtilen kapasite $T_j$ | | | | İç mekan sıcaklığı 20°C ve dış mekan sıcaklığında kısmi yükte belirtilen ısıtma kapasitesi $T_j$ | | | |
| $T_j$ = – 7°C | $P_{dh}$ | N/A | kW | $T_j$ = – 7°C | $COP_d$ | N/A | - |
| $T_j$ = + 2°C | $P_{dh}$ | 12.1 | kW | $T_j$ = + 2°C | $COP_d$ | 2.27 | - |
| $T_j$ = + 7°C | $P_{dh}$ | 8.0 | kW | $T_j$ = + 7°C | $COP_d$ | 3.85 | - |
| $T_j$ = + 12°C | $P_{dh}$ | 4.3 | kW | $T_j$ = + 12°C | $COP_d$ | 5.95 | - |
| $T_j$ = bivalent sıcaklık | $P_{dh}$ | 8.0 | kW | $T_j$ = bivalent sıcaklık | $COP_d$ | 3.85 | - |
| $T_j$ = işletme sınır sıcaklığı | $P_{dh}$ | 12.1 | kW | $T_j$ = işletme sınır sıcaklığı | $COP_d$ | 2.27 | - |
| Hava-su ısı pompaları için: $T_j$ = – 15°C (Eğer TOL < – 20°C) | $P_{dh}$ | N/A | kW | Hava-su ısı pompaları için: Tj = – 15°C (if TOL < – 20°C) | $COP_d$ | N/A | - |
| Bivalent sıcaklık | $T_{biv}$ | -15 | °C | Hava-su ısı pompaları için: İşletme sınır sıcaklığı | TOL | 2 | °C |
| Isıtma için devir aralığı yetenekliği | $P_{cych}$ | N/A | kW | Döngü aralığı verimliliği | $COP_{cyc}$ | N/A | - |
| Değer kaybı katsayısı (**) | $C_{dh}$ | 0.9 | kW | Isıtma suyu işletme sınır sıcaklığı | WTOL | 65 | °C |
| Active mod dışındaki modlarda güç tüketimi | | | | İlave ısıtıcı | | | |
| Kapalı mod | $P_{OFF}$ | 0.014 | kW | | | | |
| Termostat-kapalı mod | $P_{TO}$ | 0.024 | kW | Nominal ısı çıkışı (**) | $p_{sup}$ | 0.0 | kw |
| Bekleme modu | $P_{SB}$ | 0.014 | kW | Enerji giriş türü | Elektrik | | |
| Krank kasa ısıtıcı modu | $P_{CK}$ | 0.000 | kW | | | | |

| **Diğer öğeler** | | | | | | | |
|---|---|---|---|---|---|---|---|
| Kapasite kontrolü | değişken | | | Hava-su ısı pompaları için: Nominal hava akış hızı, dış mekan | - | 5000 | $m^3/h$ |
| İç/dış mekan ses güç seviyesi | $L_{WA}$ | -/64 | dB | Su veya tuzlu su ile çalışan ısı pompaları için: Nominal tuzlu su veya su akış hızı, dış mekan ısı değiştirici | - | N/A | $m^3/h$ |
| Yıllık enerji tüketimi | $Q_{HE}$ | 3733 | kWh | | | | |
| Isı pompası kombi ısıtıcı için: | | | | | | | |
| **Bildirilen yük profili** | N/A | | | **Su ısıtma enerji verimliliği** | $\eta_{wh}$ | N/A | % |
| Günlük elektrik tüketimi | $Q_{elec}$ | N/A | kWh | Günlük yakıt tüketimi | $Q_{fuel}$ | N/A | kWh |
| Yıllık elektrik tüketimi | AEC | N/A | kWh | Yıllık yakıt tüketimi | AFC | N/A | GJ |
| İletişim bilgileri | Kılavuzun arka kapağına bakınız. | | | | | | |

(*) Isı pompası mekan ısıtıcıları ve ısı pompası kombi ısıtıcıları için, nominal ısı çıkışı (Prated) ısıtma tasarım yüküne (Pdesignh) eşittir ve ilave ısıtıcının (Psup) nominal ısı çıkışı, ilave ısıtma kapasitesine (sup(Tj)) eşittir.
(**) Eğer Cdh ölçümle belirlenmemişse, varsayılan bozunma katsayısı Cdh = 0.9'dur.

# Teknik Özellikler

| | |
|---|---|
| Model(s): | 3-PH 12kW(ısınma 9kW);3-PH 12kW(ısınma 6kW);3-PH 12kW(ısınma 3kW);3-PH 12kW |
| Hava-su ısı pompası | evet |
| Su-su ısı pompası | hayır |
| Tuzlu su-su ısı pompası | hayır |
| Düşük sıcaklık ısı pompası | hayır |
| İlave ısıtıcı ile donatılmış | evet (için 3-PH 12kW(ısıtma 9kW));(3-PH 12kW(ısıtma 6kW);(3-PH 12kW(ısıtma 3kW);hayır (için 3-PH 12kW) |
| Isı pompası kombi ısıtıcı | hayır |
| Belirtilen iklim koşulu; | daha soğuk |
| Parametreler orta sıcaklık uygulaması için belirtilmiştir. | |

| ÖĞE | Sembol | DEĞER | BİRİM |
|---|---|---|---|
| **Nominal ısı çıkışı (*)** | Prated | 10 | kW |
| İç mekan sıcaklığı 20 °C ve dış mekan sıcaklığında kısmi yükte ısıtma için belirtilen kapasite $T_j$ | | | |
| $T_j$ = – 7°C | $P_{dh}$ | 6.7 | kW |
| $T_j$ = + 2°C | $P_{dh}$ | 4.0 | kW |
| $T_j$ = + 7°C | $P_{dh}$ | 2.9 | kW |
| $T_j$ = + 12°C | $P_{dh}$ | 3.3 | kW |
| $T_j$ = bivalent sıcaklık | $P_{dh}$ | 8.5 | kW |
| $T_j$ = işletme sınır sıcaklığı | $P_{dh}$ | 4.7 | kW |
| Hava-su ısı pompaları için: $T_j$ = – 15°C (Eğer TOL < – 20°C) | $P_{dh}$ | N/A | kW |
| Bivalent sıcaklık | $T_{biv}$ | -15 | °C |
| Isıtma için devir aralığı yetenekliği | $P_{cych}$ | N/A | kW |
| Değer kaybı katsayısı (**) | $C_{dh}$ | 0.9 | kW |
| Active mod dışındaki modlarda güç tüketimi | | | |
| Kapalı mod | $P_{OFF}$ | 0.014 | kW |
| Termostat-kapalı mod | $P_{TO}$ | 0.024 | kW |
| Bekleme modu | $P_{SB}$ | 0.014 | kW |
| Krank kasa ısıtıcı modu | $P_{CK}$ | 0.000 | kW |

| ÖĞE | Sembol | DEĞER | BİRİM |
|---|---|---|---|
| **Mevsimsel mekan ısıtma enerji verimliliği** | $\eta_s$ | 119 | % |
| İç mekan sıcaklığı 20°C ve dış mekan sıcaklığında kısmi yükte belirtilen ısıtma kapasitesi $T_j$ | | | |
| $T_j$ = – 7°C | $COP_d$ | 2.58 | - |
| $T_j$ = + 2°C | $COP_d$ | 3.68 | - |
| $T_j$ = + 7°C | $COP_d$ | 4.57 | - |
| $T_j$ = + 12°C | $COP_d$ | 6.59 | - |
| $T_j$ = bivalent sıcaklık | $COP_d$ | 1.89 | - |
| $T_j$ = işletme sınır sıcaklığı | $COP_d$ | 1.21 | - |
| Hava-su ısı pompaları için: Tj = – 15°C (if TOL < – 20°C) | $COP_d$ | N/A | - |
| Hava-su ısı pompaları için: İşletme sınır sıcaklığı | TOL | -22 | °C |
| Döngü aralığı verimliliği | $COP_{cyc}$ | N/A | - |
| Isıtma suyu işletme sınır sıcaklığı | WTOL | 65 | °C |
| İlave ısıtıcı | | | |
| Nominal ısı çıkışı (**) | $p_{sup}$ | 5.3 | kw |
| Enerji giriş türü | Elektrik | | |

| **Diğer öğeler** | | | | | | | |
|---|---|---|---|---|---|---|---|
| Kapasite kontrolü | değişken | | | Hava-su ısı pompaları için: Nominal hava akış hızı, dış mekan | - | 5000 | $m^3/h$ |
| İç/dış mekan ses güç seviyesi | $L_{WA}$ | -/64 | dB | Su veya tuzlu su ile çalışan ısı pompaları için: Nominal tuzlu su veya su akış hızı, dış mekan ısı değiştirici | - | N/A | $m^3/h$ |
| Yıllık enerji tüketimi | $Q_{HE}$ | 8459 | kWh | | | | |
| Isı pompası kombi ısıtıcı için: | | | | | | | |
| **Bildirilen yük profili** | N/A | | | **Su ısıtma enerji verimliliği** | $\eta_{wh}$ | N/A | % |
| Günlük elektrik tüketimi | $Q_{elec}$ | N/A | kWh | Günlük yakıt tüketimi | $Q_{fuel}$ | N/A | kWh |
| Yıllık elektrik tüketimi | AEC | N/A | kWh | Yıllık yakıt tüketimi | AFC | N/A | GJ |
| İletişim bilgileri | Kılavuzun arka kapağına bakınız. | | | | | | |

(*) Isı pompası mekan ısıtıcıları ve ısı pompası kombi ısıtıcıları için, nominal ısı çıkışı (Prated) ısıtma tasarım yüküne (Pdesignh) eşittir ve ilave ısıtıcının (Psup) nominal ısı çıkışı, ilave ısıtma kapasitesine (sup(Tj)) eşittir.
(**) Eğer Cdh ölçümle belirlenmemişse, varsayılan bozunma katsayısı Cdh = 0.9'dur.

# Teknik Özellikler

| | |
|---|---|
| Model(s): | 3-PH 14kW(ısınma 9kW);3-PH 14kW(ısınma 6kW);3-PH 14kW(ısınma 3kW);3-PH 14kW |
| Hava-su ısı pompası | evet |
| Su-su ısı pompası | hayır |
| Tuzlu su-su ısı pompası | hayır |
| Düşük sıcaklık ısı pompası | hayır |
| İlave ısıtıcı ile donatılmış | evet (için 3-PH 14kW(ısıtma 9kW));(3-PH 14kW(ısıtma 6kW);(3-PH 14kW(ısıtma 3kW);hayır (için 3-PH 14kW) |
| Isı pompası kombi ısıtıcı | hayır |
| Belirtilen iklim koşulu; | Ortalama |
| Parametreler düşük sıcaklık uygulaması için belirtilmiştir; | |

| ÖĞE | Sembol | DEĞER | BİRİM | ÖĞE | Sembol | DEĞER | BİRİM |
|---|---|---|---|---|---|---|---|
| **Nominal ısı çıkışı (*)** | Prated | 14 | kW | **Mevsimsel mekan ısıtma enerji verimliliği** | $\eta_s$ | 182 | % |
| İç mekan sıcaklığı 20 °C ve dış mekan sıcaklığında kısmi yükte ısıtma için belirtilen kapasite $T_j$ | | | | İç mekan sıcaklığı 20°C ve dış mekan sıcaklığında kısmi yükte belirtilen ısıtma kapasitesi $T_j$ | | | |
| $T_j$ = – 7°C | $P_{dh}$ | 12.4 | kW | $T_j$ = – 7°C | $COP_d$ | 2.80 | - |
| $T_j$ = + 2°C | $P_{dh}$ | 7.5 | kW | $T_j$ = + 2°C | $COP_d$ | 4.40 | - |
| $T_j$ = + 7°C | $P_{dh}$ | 5.1 | kW | $T_j$ = + 7°C | $COP_d$ | 6.38 | - |
| $T_j$ = + 12°C | $P_{dh}$ | 4.9 | kW | $T_j$ = + 12°C | $COP_d$ | 9.16 | - |
| $T_j$ = bivalent sıcaklık | $P_{dh}$ | 12.4 | kW | $T_j$ = bivalent sıcaklık | $COP_d$ | 2.80 | - |
| $T_j$ = işletme sınır sıcaklığı | $P_{dh}$ | 12.9 | kW | $T_j$ = işletme sınır sıcaklığı | $COP_d$ | 2.63 | - |
| Hava-su ısı pompaları için: $T_j$ = – 15°C (Eğer TOL < – 20°C) | $P_{dh}$ | N/A | kW | Hava-su ısı pompaları için: Tj = – 15°C (if TOL < – 20°C) | $COP_d$ | N/A | - |
| Bivalent sıcaklık | $T_{biv}$ | -7 | °C | Hava-su ısı pompaları için: İşletme sınır sıcaklığı | TOL | -10 | °C |
| Isıtma için devir aralığı yetenekliği | $P_{cych}$ | N/A | kW | Döngü aralığı verimliliği | $COP_{cyc}$ | N/A | - |
| Değer kaybı katsayısı (**) | $C_{dh}$ | 0.9 | kW | Isıtma suyu işletme sınır sıcaklığı | WTOL | 65 | °C |
| Active mod dışındaki modlarda güç tüketimi | | | | İlave ısıtıcı | | | |
| Kapalı mod | $P_{OFF}$ | 0.014 | kW | | | | |
| Termostat-kapalı mod | $P_{TO}$ | 0.024 | kW | Nominal ısı çıkışı (**) | $p_{sup}$ | 1.1 | kw |
| Bekleme modu | $P_{SB}$ | 0.014 | kW | Enerji giriş türü | Elektrik | | |
| Krank kasa ısıtıcı modu | $P_{CK}$ | 0.000 | kW | | | | |

| **Diğer öğeler** | | | | | | | |
|---|---|---|---|---|---|---|---|
| Kapasite kontrolü | değişken | | | Hava-su ısı pompaları için: Nominal hava akış hızı, dış mekan | - | 5500 | $m^3/h$ |
| İç/dış mekan ses güç seviyesi | $L_{WA}$ | -/66 | dB | Su veya tuzlu su ile çalışan ısı pompaları için: Nominal tuzlu su veya su akış hızı, dış mekan ısı değiştirici | - | N/A | $m^3/h$ |
| Yıllık enerji tüketimi | $Q_{HE}$ | 6237 | kWh | | | | |
| Isı pompası kombi ısıtıcı için: | | | | | | | |
| **Bildirilen yük profili** | N/A | | | **Su ısıtma enerji verimliliği** | $\eta_{wh}$ | N/A | % |
| Günlük elektrik tüketimi | $Q_{elec}$ | N/A | kWh | Günlük yakıt tüketimi | $Q_{fuel}$ | N/A | kWh |
| Yıllık elektrik tüketimi | AEC | N/A | kWh | Yıllık yakıt tüketimi | AFC | N/A | GJ |
| İletişim bilgileri | Kılavuzun arka kapağına bakınız. | | | | | | |

(*) Isı pompası mekan ısıtıcıları ve ısı pompası kombi ısıtıcıları için, nominal ısı çıkışı (Prated) ısıtma tasarım yüküne (Pdesignh) eşittir ve ilave ısıtıcının (Psup) nominal ısı çıkışı, ilave ısıtma kapasitesine (sup(Tj)) eşittir.
(**) Eğer Cdh ölçümle belirlenmemişse, varsayılan bozunma katsayısı Cdh = 0.9'dur.

# Teknik Özellikler

| | |
|---|---|
| Model(s): | 3-PH 14kW(ısınma 9kW);3-PH 14kW(ısınma 6kW);3-PH 14kW(ısınma 3kW);3-PH 14kW |
| Hava-su ısı pompası | evet |
| Su-su ısı pompası | hayır |
| Tuzlu su-su ısı pompası | hayır |
| Düşük sıcaklık ısı pompası | hayır |
| İlave ısıtıcı ile donatılmış | evet (için 3-PH 14kW(ısıtma 9kW));(3-PH 14kW(ısıtma 6kW);(3-PH 14kW(ısıtma 3kW);hayır (için 3-PH 14kW) |
| Isı pompası kombi ısıtıcı | hayır |
| Belirtilen iklim koşulu; | daha sıcak |
| Parametreler düşük sıcaklık uygulaması için belirtilmiştir; | |

| ÖĞE | Sembol | DEĞER | BİRİM | ÖĞE | Sembol | DEĞER | BİRİM |
|---|---|---|---|---|---|---|---|
| **Nominal ısı çıkışı (*)** | Prated | 12 | kW | **Mevsimsel mekan ısıtma enerji verimliliği** | $\eta_s$ | 248 | % |
| İç mekan sıcaklığı 20 °C ve dış mekan sıcaklığında kısmi yükte ısıtma için belirtilen kapasite $T_j$ | | | | İç mekan sıcaklığı 20°C ve dış mekan sıcaklığında kısmi yükte belirtilen ısıtma kapasitesi $T_j$ | | | |
| $T_j$ = – 7°C | $P_{dh}$ | N/A | kW | $T_j$ = – 7°C | $COP_d$ | N/A | - |
| $T_j$ = + 2°C | $P_{dh}$ | 12.3 | kW | $T_j$ = + 2°C | $COP_d$ | 3.41 | - |
| $T_j$ = + 7°C | $P_{dh}$ | 8.0 | kW | $T_j$ = + 7°C | $COP_d$ | 5.61 | - |
| $T_j$ = + 12°C | $P_{dh}$ | 4.2 | kW | $T_j$ = + 12°C | $COP_d$ | 7.94 | - |
| $T_j$ = bivalent sıcaklık | $P_{dh}$ | 8.0 | kW | $T_j$ = bivalent sıcaklık | $COP_d$ | 5.61 | - |
| $T_j$ = işletme sınır sıcaklığı | $P_{dh}$ | 12.3 | kW | $T_j$ = işletme sınır sıcaklığı | $COP_d$ | 3.41 | - |
| Hava-su ısı pompaları için: $T_j$ = – 15°C (Eğer TOL < – 20°C) | $P_{dh}$ | N/A | kW | Hava-su ısı pompaları için: Tj = – 15°C (if TOL < – 20°C) | $COP_d$ | N/A | - |
| Bivalent sıcaklık | $T_{biv}$ | 7 | °C | Hava-su ısı pompaları için: İşletme sınır sıcaklığı | TOL | 2 | °C |
| Isıtma için devir aralığı yetenekliği | $P_{cych}$ | N/A | kW | Döngü aralığı verimliliği | $COP_{cyc}$ | N/A | - |
| Değer kaybı katsayısı (**) | $C_{dh}$ | 0.9 | kW | Isıtma suyu işletme sınır sıcaklığı | WTOL | 65 | °C |
| Active mod dışındaki modlarda güç tüketimi | | | | İlave ısıtıcı | | | |
| Kapalı mod | $P_{OFF}$ | 0.014 | kW | | | | |
| Termostat-kapalı mod | $P_{TO}$ | 0.024 | kW | Nominal ısı çıkışı (**) | $p_{sup}$ | 0.0 | kw |
| Bekleme modu | $P_{SB}$ | 0.014 | kW | Enerji giriş türü | Elektrik | | |
| Krank kasa ısıtıcı modu | $P_{CK}$ | 0.000 | kW | | | | |

| **Diğer öğeler** | | | | | | | |
|---|---|---|---|---|---|---|---|
| Kapasite kontrolü | değişken | | | Hava-su ısı pompaları için: Nominal hava akış hızı, dış mekan | - | 5500 | $m^3/h$ |
| İç/dış mekan ses güç seviyesi | $L_{WA}$ | -/66 | dB | Su veya tuzlu su ile çalışan ısı pompaları için: Nominal tuzlu su veya su akış hızı, dış mekan ısı değiştirici | - | N/A | $m^3/h$ |
| Yıllık enerji tüketimi | $Q_{HE}$ | 2638 | kWh | | | | |
| Isı pompası kombi ısıtıcı için: | | | | | | | |
| **Bildirilen yük profili** | N/A | | | **Su ısıtma enerji verimliliği** | $\eta_{wh}$ | N/A | % |
| Günlük elektrik tüketimi | $Q_{elec}$ | N/A | kWh | Günlük yakıt tüketimi | $Q_{fuel}$ | N/A | kWh |
| Yıllık elektrik tüketimi | AEC | N/A | kWh | Yıllık yakıt tüketimi | AFC | N/A | GJ |
| İletişim bilgileri | Kılavuzun arka kapağına bakınız. | | | | | | |

(*) Isı pompası mekan ısıtıcıları ve ısı pompası kombi ısıtıcıları için, nominal ısı çıkışı (Prated) ısıtma tasarım yüküne (Pdesignh) eşittir ve ilave ısıtıcının (Psup) nominal ısı çıkışı, ilave ısıtma kapasitesine (sup(Tj)) eşittir.
(**) Eğer Cdh ölçümle belirlenmemişse, varsayılan bozunma katsayısı Cdh = 0.9'dur.

# Teknik Özellikler

| | |
|---|---|
| Model(s): | 3-PH 14kW(ısınma 9kW);3-PH 14kW(ısınma 6kW);3-PH 14kW(ısınma 3kW);3-PH 14kW |
| Hava-su ısı pompası | evet |
| Su-su ısı pompası | hayır |
| Tuzlu su-su ısı pompası | hayır |
| Düşük sıcaklık ısı pompası | hayır |
| İlave ısıtıcı ile donatılmış | evet (için 3-PH 14kW(ısıtma 9kW));(3-PH 14kW(ısıtma 6kW);(3-PH 14kW(ısıtma 3kW);hayır (için 3-PH 14kW) |
| Isı pompası kombi ısıtıcı | hayır |
| Belirtilen iklim koşulu; | daha soğuk |
| Parametreler düşük sıcaklık uygulaması için belirtilmiştir; | |

| ÖĞE | Sembol | DEĞER | BİRİM | ÖĞE | Sembol | DEĞER | BİRİM |
|---|---|---|---|---|---|---|---|
| **Nominal ısı çıkışı (*)** | Prated | 13 | kW | **Mevsimsel mekan ısıtma enerji verimliliği** | $\eta_s$ | 156 | % |
| İç mekan sıcaklığı 20 °C ve dış mekan sıcaklığında kısmi yükte ısıtma için belirtilen kapasite $T_j$ | | | | İç mekan sıcaklığı 20°C ve dış mekan sıcaklığında kısmi yükte belirtilen ısıtma kapasitesi $T_j$ | | | |
| $T_j$ = – 7°C | $P_{dh}$ | 8.3 | kW | $T_j$ = – 7°C | $COP_d$ | 3.36 | - |
| $T_j$ = + 2°C | $P_{dh}$ | 4.7 | kW | $T_j$ = + 2°C | $COP_d$ | 4.73 | - |
| $T_j$ = + 7°C | $P_{dh}$ | 3.4 | kW | $T_j$ = + 7°C | $COP_d$ | 6.11 | - |
| $T_j$ = + 12°C | $P_{dh}$ | 3.8 | kW | $T_j$ = + 12°C | $COP_d$ | 7.98 | - |
| $T_j$ = bivalent sıcaklık | $P_{dh}$ | 10.7 | kW | $T_j$ = bivalent sıcaklık | $COP_d$ | 2.61 | - |
| $T_j$ = işletme sınır sıcaklığı | $P_{dh}$ | 7.9 | kW | $T_j$ = işletme sınır sıcaklığı | $COP_d$ | 2.10 | - |
| Hava-su ısı pompaları için: $T_j$ = – 15°C (Eğer TOL < – 20°C) | $P_{dh}$ | N/A | kW | Hava-su ısı pompaları için: Tj = – 15°C (if TOL < – 20°C) | $COP_d$ | N/A | - |
| Bivalent sıcaklık | $T_{biv}$ | -15 | °C | Hava-su ısı pompaları için: İşletme sınır sıcaklığı | TOL | -22 | °C |
| Isıtma için devir aralığı yetenekliği | $P_{cych}$ | N/A | kW | Döngü aralığı verimliliği | $COP_{cyc}$ | N/A | - |
| Değer kaybı katsayısı (**) | $C_{dh}$ | 0.9 | kW | Isıtma suyu işletme sınır sıcaklığı | WTOL | 65 | °C |
| Active mod dışındaki modlarda güç tüketimi | | | | İlave ısıtıcı | | | |
| Kapalı mod | $P_{OFF}$ | 0.014 | kW | | | | |
| Termostat-kapalı mod | $P_{TO}$ | 0.024 | kW | Nominal ısı çıkışı (**) | $p_{sup}$ | 5.1 | kw |
| Bekleme modu | $P_{SB}$ | 0.014 | kW | Enerji giriş türü | Elektrik | | |
| Krank kasa ısıtıcı modu | $P_{CK}$ | 0.000 | kW | | | | |

| **Diğer öğeler** | | | | | | | |
|---|---|---|---|---|---|---|---|
| Kapasite kontrolü | değişken | | | Hava-su ısı pompaları için: Nominal hava akış hızı, dış mekan | - | 5500 | $m^3/h$ |
| İç/dış mekan ses güç seviyesi | $L_{WA}$ | -/66 | dB | Su veya tuzlu su ile çalışan ısı pompaları için: Nominal tuzlu su veya su akış hızı, dış mekan ısı değiştirici | - | N/A | $m^3/h$ |
| Yıllık enerji tüketimi | $Q_{HE}$ | 8082 | kWh | | | | |
| Isı pompası kombi ısıtıcı için: | | | | | | | |
| **Bildirilen yük profili** | N/A | | | **Su ısıtma enerji verimliliği** | $\eta_{wh}$ | N/A | % |
| Günlük elektrik tüketimi | $Q_{elec}$ | N/A | kWh | Günlük yakıt tüketimi | $Q_{fuel}$ | N/A | kWh |
| Yıllık elektrik tüketimi | AEC | N/A | kWh | Yıllık yakıt tüketimi | AFC | N/A | GJ |
| İletişim bilgileri | Kılavuzun arka kapağına bakınız. | | | | | | |

(*) Isı pompası mekan ısıtıcıları ve ısı pompası kombi ısıtıcıları için, nominal ısı çıkışı (Prated) ısıtma tasarım yüküne (Pdesignh) eşittir ve ilave ısıtıcının (Psup) nominal ısı çıkışı, ilave ısıtma kapasitesine (sup(Tj)) eşittir.
(**) Eğer Cdh ölçümle belirlenmemişse, varsayılan bozunma katsayısı Cdh = 0.9'dur.

# Teknik Özellikler

| | |
|---|---|
| Model(s): | 3-PH 14kW(ısınma 9kW);3-PH 14kW(ısınma 6kW);3-PH 14kW(ısınma 3kW);3-PH 14kW |
| Hava-su ısı pompası | evet |
| Su-su ısı pompası | hayır |
| Tuzlu su-su ısı pompası | hayır |
| Düşük sıcaklık ısı pompası | hayır |
| İlave ısıtıcı ile donatılmış | evet (için 3-PH 14kW(ısıtma 9kW));(3-PH 14kW(ısıtma 6kW);(3-PH 14kW(ısıtma 3kW);hayır (için 3-PH 14kW) |
| Isı pompası kombi ısıtıcı | hayır |
| Belirtilen iklim koşulu; | Ortalama |
| Parametreler orta sıcaklık uygulaması için belirtilmiştir. | |

| ÖĞE | Sembol | DEĞER | BİRİM | ÖĞE | Sembol | DEĞER | BİRİM |
|---|---|---|---|---|---|---|---|
| **Nominal ısı çıkışı (*)** | Prated | 12 | kW | **Mevsimsel mekan ısıtma enerji verimliliği** | $\eta_s$ | 135 | % |
| İç mekan sıcaklığı 20 °C ve dış mekan sıcaklığında kısmi yükte ısıtma için belirtilen kapasite $T_j$ | | | | İç mekan sıcaklığı 20°C ve dış mekan sıcaklığında kısmi yükte belirtilen ısıtma kapasitesi $T_j$ | | | |
| $T_j$ = – 7°C | $P_{dh}$ | 10.9 | kW | $T_j$ = – 7°C | $COP_d$ | 2.03 | - |
| $T_j$ = + 2°C | $P_{dh}$ | 7.1 | kW | $T_j$ = + 2°C | $COP_d$ | 3.35 | - |
| $T_j$ = + 7°C | $P_{dh}$ | 4.8 | kW | $T_j$ = + 7°C | $COP_d$ | 4.67 | - |
| $T_j$ = + 12°C | $P_{dh}$ | 4.0 | kW | $T_j$ = + 12°C | $COP_d$ | 7.27 | - |
| $T_j$ = bivalent sıcaklık | $P_{dh}$ | 10.9 | kW | $T_j$ = bivalent sıcaklık | $COP_d$ | 2.03 | - |
| $T_j$ = işletme sınır sıcaklığı | $P_{dh}$ | 10.0 | kW | $T_j$ = işletme sınır sıcaklığı | $COP_d$ | 1.79 | - |
| Hava-su ısı pompaları için: $T_j$ = – 15°C (Eğer TOL < – 20°C) | $P_{dh}$ | N/A | kW | Hava-su ısı pompaları için: Tj = – 15°C (if TOL < – 20°C) | $COP_d$ | N/A | - |
| Bivalent sıcaklık | $T_{biv}$ | -7 | °C | Hava-su ısı pompaları için: İşletme sınır sıcaklığı | TOL | -10 | °C |
| Isıtma için devir aralığı yetenekliği | $P_{cych}$ | N/A | kW | Döngü aralığı verimliliği | $COP_{cyc}$ | N/A | - |
| Değer kaybı katsayısı (**) | $C_{dh}$ | 0.9 | kW | Isıtma suyu işletme sınır sıcaklığı | WTOL | 65 | °C |
| Active mod dışındaki modlarda güç tüketimi | | | | İlave ısıtıcı | | | |
| Kapalı mod | $P_{OFF}$ | 0.014 | kW | | | | |
| Termostat-kapalı mod | $P_{TO}$ | 0.024 | kW | Nominal ısı çıkışı (**) | $p_{sup}$ | 2.0 | kw |
| Bekleme modu | $P_{SB}$ | 0.014 | kW | Enerji giriş türü | Elektrik | | |
| Krank kasa ısıtıcı modu | $P_{CK}$ | 0.000 | kW | | | | |

| | | | | | | | |
|---|---|---|---|---|---|---|---|
| **Diğer öğeler** | | | | | | | |
| Kapasite kontrolü | değişken | | | Hava-su ısı pompaları için: Nominal hava akış hızı, dış mekan | - | 5500 | $m^3/h$ |
| İç/dış mekan ses güç seviyesi | $L_{WA}$ | -/66 | dB | Su veya tuzlu su ile çalışan ısı pompaları için: Nominal tuzlu su veya su akış hızı, dış mekan ısı değiştirici | - | N/A | $m^3/h$ |
| Yıllık enerji tüketimi | $Q_{HE}$ | 7384 | kWh | | | | |
| Isı pompası kombi ısıtıcı için: | | | | | | | |
| **Bildirilen yük profili** | N/A | | | **Su ısıtma enerji verimliliği** | $\eta_{wh}$ | N/A | % |
| Günlük elektrik tüketimi | $Q_{elec}$ | N/A | kWh | Günlük yakıt tüketimi | $Q_{fuel}$ | N/A | kWh |
| Yıllık elektrik tüketimi | AEC | N/A | kWh | Yıllık yakıt tüketimi | AFC | N/A | GJ |
| İletişim bilgileri | Kılavuzun arka kapağına bakınız. | | | | | | |

(*) Isı pompası mekan ısıtıcıları ve ısı pompası kombi ısıtıcıları için, nominal ısı çıkışı (Prated) ısıtma tasarım yüküne (Pdesignh) eşittir ve ilave ısıtıcının (Psup) nominal ısı çıkışı, ilave ısıtma kapasitesine (sup(Tj)) eşittir.
(**) Eğer Cdh ölçümle belirlenmemişse, varsayılan bozunma katsayısı Cdh = 0.9'dur.

# Teknik Ozellikler

| | |
|---|---|
| Model(s): | 3-PH 14kW(ısınma 9kW);3-PH 14kW(ısınma 6kW);3-PH 14kW(ısınma 3kW);3-PH 14kW |
| Hava-su ısı pompası | evet |
| Su-su ısı pompası | hayır |
| Tuzlu su-su ısı pompası | hayır |
| Düşük sıcaklık ısı pompası | hayır |
| İlave ısıtıcı ile donatılmış | evet (için 3-PH 14kW(ısıtma 9kW));(3-PH 14kW(ısıtma 6kW);(3-PH 14kW(ısıtma 3kW);hayır (için 3-PH 14kW) |
| Isı pompası kombi ısıtıcı | hayır |
| Belirtilen iklim koşulu; | daha sıcak |
| Parametreler orta sıcaklık uygulaması için belirtilmiştir. | |

| ÖĞE | Sembol | DEĞER | BİRİM | ÖĞE | Sembol | DEĞER | BİRİM |
|---|---|---|---|---|---|---|---|
| **Nominal ısı çıkışı (*)** | Prated | 14 | kW | **Mevsimsel mekan ısıtma enerji verimliliği** | $\eta_s$ | 170 | % |
| İç mekan sıcaklığı 20 °C ve dış mekan sıcaklığında kısmi yükte ısıtma için belirtilen kapasite $T_j$ | | | | İç mekan sıcaklığı 20°C ve dış mekan sıcaklığında kısmi yükte belirtilen ısıtma kapasitesi $T_j$ | | | |
| $T_j$ = – 7°C | $P_{dh}$ | N/A | kW | $T_j$ = – 7°C | $COP_d$ | N/A | - |
| $T_j$ = + 2°C | $P_{dh}$ | 13.1 | kW | $T_j$ = + 2°C | $COP_d$ | 2.25 | - |
| $T_j$ = + 7°C | $P_{dh}$ | 9.0 | kW | $T_j$ = + 7°C | $COP_d$ | 3.61 | - |
| $T_j$ = + 12°C | $P_{dh}$ | 4.1 | kW | $T_j$ = + 12°C | $COP_d$ | 5.94 | - |
| $T_j$ = bivalent sıcaklık | $P_{dh}$ | 9.0 | kW | $T_j$ = bivalent sıcaklık | $COP_d$ | 3.61 | - |
| $T_j$ = işletme sınır sıcaklığı | $P_{dh}$ | 13.1 | kW | $T_j$ = işletme sınır sıcaklığı | $COP_d$ | 2.25 | - |
| Hava-su ısı pompaları için: $T_j$ = – 15°C (Eğer TOL < – 20°C) | $P_{dh}$ | N/A | kW | Hava-su ısı pompaları için: Tj = – 15°C (if TOL < – 20°C) | $COP_d$ | N/A | - |
| Bivalent sıcaklık | $T_{biv}$ | -7 | °C | Hava-su ısı pompaları için: İşletme sınır sıcaklığı | TOL | 2 | °C |
| Isıtma için devir aralığı yetenekliği | $P_{cych}$ | N/A | kW | Döngü aralığı verimliliği | $COP_{cyc}$ | N/A | - |
| Değer kaybı katsayısı (**) | $C_{dh}$ | 0.9 | kW | Isıtma suyu işletme sınır sıcaklığı | WTOL | 65 | °C |
| Active mod dışındaki modlarda güç tüketimi | | | | İlave ısıtıcı | | | |
| Kapalı mod | $P_{OFF}$ | 0.014 | kW | | | | |
| Termostat-kapalı mod | $P_{TO}$ | 0.024 | kW | Nominal ısı çıkışı (**) | $p_{sup}$ | 0.9 | kw |
| Bekleme modu | $P_{SB}$ | 0.014 | kW | Enerji giriş türü | Elektrik | | |
| Krank kasa ısıtıcı modu | $P_{CK}$ | 0.000 | kW | | | | |

| **Diğer öğeler** | | | | | | | |
|---|---|---|---|---|---|---|---|
| Kapasite kontrolü | değişken | | | Hava-su ısı pompaları için: Nominal hava akış hızı, dış mekan | - | 5500 | $m^3/h$ |
| İç/dış mekan ses güç seviyesi | $L_{WA}$ | -/66 | dB | Su veya tuzlu su ile çalışan ısı pompaları için: Nominal tuzlu su veya su akış hızı, dış mekan ısı değiştirici | - | N/A | $m^3/h$ |
| Yıllık enerji tüketimi | $Q_{HE}$ | 4320 | kWh | | | | |
| Isı pompası kombi ısıtıcı için: | | | | | | | |
| **Bildirilen yük profili** | N/A | | | **Su ısıtma enerji verimliliği** | $\eta_{wh}$ | N/A | % |
| Günlük elektrik tüketimi | $Q_{elec}$ | N/A | kWh | Günlük yakıt tüketimi | $Q_{fuel}$ | N/A | kWh |
| Yıllık elektrik tüketimi | AEC | N/A | kWh | Yıllık yakıt tüketimi | AFC | N/A | GJ |
| İletişim bilgileri | Kılavuzun arka kapağına bakınız. | | | | | | |

(*) Isı pompası mekan ısıtıcıları ve ısı pompası kombi ısıtıcıları için, nominal ısı çıkışı (Prated) ısıtma tasarım yüküne (Pdesignh) eşittir ve ilave ısıtıcının (Psup) nominal ısı çıkışı, ilave ısıtma kapasitesine (sup(Tj)) eşittir.
(**) Eğer Cdh ölçümle belirlenmemişse, varsayılan bozunma katsayısı Cdh = 0.9'dur.

# Teknik Ozellikler

| | |
|---|---|
| Model(s): | 3-PH 14kW(ısınma 9kW);3-PH 14kW(ısınma 6kW);3-PH 14kW(ısınma 3kW);3-PH 14kW |
| Hava-su ısı pompası | evet |
| Su-su ısı pompası | hayır |
| Tuzlu su-su ısı pompası | hayır |
| Düşük sıcaklık ısı pompası | hayır |
| İlave ısıtıcı ile donatılmış | evet (için 3-PH 14kW(ısıtma 9kW));(3-PH 14kW(ısıtma 6kW);(3-PH 14kW(ısıtma 3kW);hayır (için 3-PH 14kW) |
| Isı pompası kombi ısıtıcı | hayır |
| Belirtilen iklim koşulu; | daha soğuk |
| Parametreler orta sıcaklık uygulaması için belirtilmiştir. | |

| ÖĞE | Sembol | DEĞER | BİRİM | ÖĞE | Sembol | DEĞER | BİRİM |
|---|---|---|---|---|---|---|---|
| **Nominal ısı çıkışı (*)** | Prated | 11 | kW | **Mevsimsel mekan ısıtma enerji verimliliği** | $\eta_s$ | 117 | % |
| İç mekan sıcaklığı 20 °C ve dış mekan sıcaklığında kısmi yükte ısıtma için belirtilen kapasite $T_j$ | | | | İç mekan sıcaklığı 20°C ve dış mekan sıcaklığında kısmi yükte belirtilen ısıtma kapasitesi $T_j$ | | | |
| $T_j$ = – 7°C | $P_{dh}$ | 7.2 | kW | $T_j$ = – 7°C | $COP_d$ | 2.56 | - |
| $T_j$ = + 2°C | $P_{dh}$ | 4.3 | kW | $T_j$ = + 2°C | $COP_d$ | 3.62 | - |
| $T_j$ = + 7°C | $P_{dh}$ | 3.1 | kW | $T_j$ = + 7°C | $COP_d$ | 4.77 | - |
| $T_j$ = + 12°C | $P_{dh}$ | 3.6 | kW | $T_j$ = + 12°C | $COP_d$ | 6.40 | - |
| $T_j$ = bivalent sıcaklık | $P_{dh}$ | 8.9 | kW | $T_j$ = bivalent sıcaklık | $COP_d$ | 1.82 | - |
| $T_j$ = işletme sınır sıcaklığı | $P_{dh}$ | 4.4 | kW | $T_j$ = işletme sınır sıcaklığı | $COP_d$ | 1.16 | - |
| Hava-su ısı pompaları için: $T_j$ = – 15°C (Eğer TOL < – 20°C) | $P_{dh}$ | N/A | kW | Hava-su ısı pompaları için: Tj = – 15°C (if TOL < – 20°C) | $COP_d$ | N/A | - |
| Bivalent sıcaklık | $T_{biv}$ | -15 | °C | Hava-su ısı pompaları için: İşletme sınır sıcaklığı | TOL | -22 | °C |
| Isıtma için devir aralığı yetenekliği | $P_{cych}$ | N/A | kW | Döngü aralığı verimliliği | $COP_{cyc}$ | N/A | - |
| Değer kaybı katsayısı (**) | $C_{dh}$ | 0.9 | kW | Isıtma suyu işletme sınır sıcaklığı | WTOL | 65 | °C |
| Active mod dışındaki modlarda güç tüketimi | | | | İlave ısıtıcı | | | |
| Kapalı mod | $P_{OFF}$ | 0.014 | kW | | | | |
| Termostat-kapalı mod | $P_{TO}$ | 0.024 | kW | Nominal ısı çıkışı (**) | $p_{sup}$ | 6.6 | kw |
| Bekleme modu | $P_{SB}$ | 0.014 | kW | Enerji giriş türü | Elektrik | | |
| Krank kasa ısıtıcı modu | $P_{CK}$ | 0.000 | kW | | | | |

| **Diğer öğeler** | | | | | | | |
|---|---|---|---|---|---|---|---|
| Kapasite kontrolü | değişken | | | Hava-su ısı pompaları için: Nominal hava akış hızı, dış mekan | - | 5500 | $m^3/h$ |
| İç/dış mekan ses güç seviyesi | $L_{WA}$ | -/66 | dB | Su veya tuzlu su ile çalışan ısı pompaları için: Nominal tuzlu su veya su akış hızı, dış mekan ısı değiştirici | - | N/A | $m^3/h$ |
| Yıllık enerji tüketimi | $Q_{HE}$ | 8967 | kWh | | | | |
| Isı pompası kombi ısıtıcı için: | | | | | | | |
| **Bildirilen yük profili** | N/A | | | **Su ısıtma enerji verimliliği** | $\eta_{wh}$ | N/A | % |
| Günlük elektrik tüketimi | $Q_{elec}$ | N/A | kWh | Günlük yakıt tüketimi | $Q_{fuel}$ | N/A | kWh |
| Yıllık elektrik tüketimi | AEC | N/A | kWh | Yıllık yakıt tüketimi | AFC | N/A | GJ |
| İletişim bilgileri | Kılavuzun arka kapağına bakınız. | | | | | | |

(*) Isı pompası mekan ısıtıcıları ve ısı pompası kombi ısıtıcıları için, nominal ısı çıkışı (Prated) ısıtma tasarım yüküne (Pdesignh) eşittir ve ilave ısıtıcının (Psup) nominal ısı çıkışı, ilave ısıtma kapasitesine (sup(Tj)) eşittir.
(**) Eğer Cdh ölçümle belirlenmemişse, varsayılan bozunma katsayısı Cdh = 0.9'dur.

# Teknik Ozellikler

| | |
|---|---|
| Model(s): | 3-PH 16kW(ısınma 9kW);3-PH 16kW(ısınma 6kW);3-PH 16kW(ısınma 3kW);3-PH 16kW |
| Hava-su ısı pompası | evet |
| Su-su ısı pompası | hayır |
| Tuzlu su-su ısı pompası | hayır |
| Düşük sıcaklık ısı pompası | hayır |
| İlave ısıtıcı ile donatılmış | evet (için 3-PH 16kW(ısıtma 9kW));(3-PH 16kW(ısıtma 6kW);(3-PH 16kW(ısıtma 3kW);hayır (için 3-PH 16kW) |
| Isı pompası kombi ısıtıcı | hayır |
| Belirtilen iklim koşulu; | Ortalama |
| Parametreler düşük sıcaklık uygulaması için belirtilmiştir; | |

| ÖĞE | Sembol | DEĞER | BİRİM | ÖĞE | Sembol | DEĞER | BİRİM |
|---|---|---|---|---|---|---|---|
| **Nominal ısı çıkışı (*)** | Prated | 15 | kW | **Mevsimsel mekan ısıtma enerji verimliliği** | $\eta_s$ | 179 | % |
| İç mekan sıcaklığı 20 °C ve dış mekan sıcaklığında kısmi yükte ısıtma için belirtilen kapasite $T_j$ | | | | İç mekan sıcaklığı 20°C ve dış mekan sıcaklığında kısmi yükte belirtilen ısıtma kapasitesi $T_j$ | | | |
| $T_j$ = – 7°C | $P_{dh}$ | 13.4 | kW | $T_j$ = – 7°C | $COP_d$ | 2.60 | - |
| $T_j$ = + 2°C | $P_{dh}$ | 8.0 | kW | $T_j$ = + 2°C | $COP_d$ | 4.39 | - |
| $T_j$ = + 7°C | $P_{dh}$ | 5.4 | kW | $T_j$ = + 7°C | $COP_d$ | 6.44 | - |
| $T_j$ = + 12°C | $P_{dh}$ | 4.6 | kW | $T_j$ = + 12°C | $COP_d$ | 8.92 | - |
| $T_j$ = bivalent sıcaklık | $P_{dh}$ | 13.4 | kW | $T_j$ = bivalent sıcaklık | $COP_d$ | 2.60 | - |
| $T_j$ = işletme sınır sıcaklığı | $P_{dh}$ | 13.4 | kW | $T_j$ = işletme sınır sıcaklığı | $COP_d$ | 2.44 | - |
| Hava-su ısı pompaları için: $T_j$ = – 15°C (Eğer TOL < – 20°C) | $P_{dh}$ | N/A | kW | Hava-su ısı pompaları için: Tj = – 15°C (if TOL < – 20°C) | $COP_d$ | N/A | - |
| Bivalent sıcaklık | $T_{biv}$ | -7 | °C | Hava-su ısı pompaları için: İşletme sınır sıcaklığı | TOL | -10 | °C |
| Isıtma için devir aralığı yetenekliği | $P_{cych}$ | N/A | kW | Döngü aralığı verimliliği | $COP_{cyc}$ | N/A | - |
| Değer kaybı katsayısı (**) | $C_{dh}$ | 0.9 | kW | Isıtma suyu işletme sınır sıcaklığı | WTOL | 65 | °C |
| Active mod dışındaki modlarda güç tüketimi | | | | İlave ısıtıcı | | | |
| Kapalı mod | $P_{OFF}$ | 0.014 | kW | | | | |
| Termostat-kapalı mod | $P_{TO}$ | 0.024 | kW | Nominal ısı çıkışı (**) | $p_{sup}$ | 1.6 | kw |
| Bekleme modu | $P_{SB}$ | 0.014 | kW | Enerji giriş türü | Elektrik | | |
| Krank kasa ısıtıcı modu | $P_{CK}$ | 0.000 | kW | | | | |

| | | | | | | | |
|---|---|---|---|---|---|---|---|
| **Diğer öğeler** | | | | | | | |
| Kapasite kontrolü | değişken | | | Hava-su ısı pompaları için: Nominal hava akış hızı, dış mekan | - | 6000 | $m^3/h$ |
| İç/dış mekan ses güç seviyesi | $L_{WA}$ | -/68 | dB | Su veya tuzlu su ile çalışan ısı pompaları için: Nominal tuzlu su veya su akış hızı, dış mekan ısı değiştirici | - | N/A | $m^3/h$ |
| Yıllık enerji tüketimi | $Q_{HE}$ | 6838 | kWh | | | | |
| Isı pompası kombi ısıtıcı için: | | | | | | | |
| **Bildirilen yük profili** | N/A | | | **Su ısıtma enerji verimliliği** | $\eta_{wh}$ | N/A | % |
| Günlük elektrik tüketimi | $Q_{elec}$ | N/A | kWh | Günlük yakıt tüketimi | $Q_{fuel}$ | N/A | kWh |
| Yıllık elektrik tüketimi | AEC | N/A | kWh | Yıllık yakıt tüketimi | AFC | N/A | GJ |
| İletişim bilgileri | Kılavuzun arka kapağına bakınız. | | | | | | |

(*) Isı pompası mekan ısıtıcıları ve ısı pompası kombi ısıtıcıları için, nominal ısı çıkışı (Prated) ısıtma tasarım yüküne (Pdesignh) eşittir ve ilave ısıtıcının (Psup) nominal ısı çıkışı, ilave ısıtma kapasitesine (sup(Tj)) eşittir.
(**) Eğer Cdh ölçümle belirlenmemişse, varsayılan bozunma katsayısı Cdh = 0.9'dur.

# Teknik Ozellikler

| | |
|---|---|
| Model(s): | 3-PH 16kW(ısınma 9kW);3-PH 16kW(ısınma 6kW);3-PH 16kW(ısınma 3kW);3-PH 16kW |
| Hava-su ısı pompası | evet |
| Su-su ısı pompası | hayır |
| Tuzlu su-su ısı pompası | hayır |
| Düşük sıcaklık ısı pompası | hayır |
| İlave ısıtıcı ile donatılmış | evet (için 3-PH 16kW(ısıtma 9kW));(3-PH 16kW(ısıtma 6kW);(3-PH 16kW(ısıtma 3kW);hayır (için 3-PH 16kW) |
| Isı pompası kombi ısıtıcı | hayır |
| Belirtilen iklim koşulu; | daha sıcak |
| Parametreler düşük sıcaklık uygulaması için belirtilmiştir; | |

| ÖĞE | Sembol | DEĞER | BİRİM | ÖĞE | Sembol | DEĞER | BİRİM |
|---|---|---|---|---|---|---|---|
| **Nominal ısı çıkışı (*)** | Prated | 13 | kW | **Mevsimsel mekan ısıtma enerji verimliliği** | $\eta_s$ | 239 | % |
| İç mekan sıcaklığı 20 °C ve dış mekan sıcaklığında kısmi yükte ısıtma için belirtilen kapasite $T_j$ | | | | İç mekan sıcaklığı 20°C ve dış mekan sıcaklığında kısmi yükte belirtilen ısıtma kapasitesi $T_j$ | | | |
| $T_j$ = – 7°C | $P_{dh}$ | N/A | kW | $T_j$ = – 7°C | $COP_d$ | N/A | - |
| $T_j$ = + 2°C | $P_{dh}$ | 13.3 | kW | $T_j$ = + 2°C | $COP_d$ | 3.33 | - |
| $T_j$ = + 7°C | $P_{dh}$ | 8.6 | kW | $T_j$ = + 7°C | $COP_d$ | 5.20 | - |
| $T_j$ = + 12°C | $P_{dh}$ | 4.8 | kW | $T_j$ = + 12°C | $COP_d$ | 7.95 | - |
| $T_j$ = bivalent sıcaklık | $P_{dh}$ | 8.6 | kW | $T_j$ = bivalent sıcaklık | $COP_d$ | 5.20 | - |
| $T_j$ = işletme sınır sıcaklığı | $P_{dh}$ | 13.3 | kW | $T_j$ = işletme sınır sıcaklığı | $COP_d$ | 3.33 | - |
| Hava-su ısı pompaları için: $T_j$ = – 15°C (Eğer TOL < – 20°C) | $P_{dh}$ | N/A | kW | Hava-su ısı pompaları için: Tj = – 15°C (if TOL < – 20°C) | $COP_d$ | N/A | - |
| Bivalent sıcaklık | $T_{biv}$ | 7 | °C | Hava-su ısı pompaları için: İşletme sınır sıcaklığı | TOL | 2 | °C |
| Isıtma için devir aralığı yetenekliği | $P_{cych}$ | N/A | kW | Döngü aralığı verimliliği | $COP_{cyc}$ | N/A | - |
| Değer kaybı katsayısı (**) | $C_{dh}$ | 0.9 | kW | Isıtma suyu işletme sınır sıcaklığı | WTOL | 65 | °C |
| Active mod dışındaki modlarda güç tüketimi | | | | İlave ısıtıcı | | | |
| Kapalı mod | $P_{OFF}$ | 0.014 | kW | | | | |
| Termostat-kapalı mod | $P_{TO}$ | 0.024 | kW | Nominal ısı çıkışı (**) | $p_{sup}$ | 0.0 | kw |
| Bekleme modu | $P_{SB}$ | 0.014 | kW | Enerji giriş türü | Elektrik | | |
| Krank kasa ısıtıcı modu | $P_{CK}$ | 0.000 | kW | | | | |

| **Diğer öğeler** | | | | | | | |
|---|---|---|---|---|---|---|---|
| Kapasite kontrolü | değişken | | | Hava-su ısı pompaları için: Nominal hava akış hızı, dış mekan | - | 6000 | $m^3/h$ |
| İç/dış mekan ses güç seviyesi | $L_{WA}$ | -/68 | dB | Su veya tuzlu su ile çalışan ısı pompaları için: Nominal tuzlu su veya su akış hızı, dış mekan ısı değiştirici | - | N/A | $m^3/h$ |
| Yıllık enerji tüketimi | $Q_{HE}$ | 2933 | kWh | | | | |
| Isı pompası kombi ısıtıcı için: | | | | | | | |
| **Bildirilen yük profili** | N/A | | | **Su ısıtma enerji verimliliği** | $\eta_{wh}$ | N/A | % |
| Günlük elektrik tüketimi | $Q_{elec}$ | N/A | kWh | Günlük yakıt tüketimi | $Q_{fuel}$ | N/A | kWh |
| Yıllık elektrik tüketimi | AEC | N/A | kWh | Yıllık yakıt tüketimi | AFC | N/A | GJ |
| İletişim bilgileri | Kılavuzun arka kapağına bakınız. | | | | | | |

(*) Isı pompası mekan ısıtıcıları ve ısı pompası kombi ısıtıcıları için, nominal ısı çıkışı (Prated) ısıtma tasarım yüküne (Pdesignh) eşittir ve ilave ısıtıcının (Psup) nominal ısı çıkışı, ilave ısıtma kapasitesine (sup(Tj)) eşittir.
(**) Eğer Cdh ölçümle belirlenmemişse, varsayılan bozunma katsayısı Cdh = 0.9'dur.

# Teknik Ozellikler

| | |
|---|---|
| Model(s): | 3-PH 16kW(ısınma 9kW);3-PH 16kW(ısınma 6kW);3-PH 16kW(ısınma 3kW);3-PH 16kW |
| Hava-su ısı pompası | evet |
| Su-su ısı pompası | hayır |
| Tuzlu su-su ısı pompası | hayır |
| Düşük sıcaklık ısı pompası | hayır |
| İlave ısıtıcı ile donatılmış | evet (için 3-PH 16kW(ısıtma 9kW));(3-PH 16kW(ısıtma 6kW);(3-PH 16kW(ısıtma 3kW);hayır (için 3-PH 16kW) |
| Isı pompası kombi ısıtıcı | hayır |
| Belirtilen iklim koşulu; | daha soğuk |
| Parametreler düşük sıcaklık uygulaması için belirtilmiştir; | |

| ÖĞE | Sembol | DEĞER | BİRİM | ÖĞE | Sembol | DEĞER | BİRİM |
|---|---|---|---|---|---|---|---|
| **Nominal ısı çıkışı (*)** | Prated | 14 | kW | **Mevsimsel mekan ısıtma enerji verimliliği** | $\eta_s$ | 156 | % |
| İç mekan sıcaklığı 20 °C ve dış mekan sıcaklığında kısmi yükte ısıtma için belirtilen kapasite $T_j$ | | | | İç mekan sıcaklığı 20°C ve dış mekan sıcaklığında kısmi yükte belirtilen ısıtma kapasitesi $T_j$ | | | |
| $T_j$ = – 7°C | $P_{dh}$ | 9.1 | kW | $T_j$ = – 7°C | $COP_d$ | 3.32 | - |
| $T_j$ = + 2°C | $P_{dh}$ | 5.0 | kW | $T_j$ = + 2°C | $COP_d$ | 4.88 | - |
| $T_j$ = + 7°C | $P_{dh}$ | 4.2 | kW | $T_j$ = + 7°C | $COP_d$ | 6.50 | - |
| $T_j$ = + 12°C | $P_{dh}$ | 3.7 | kW | $T_j$ = + 12°C | $COP_d$ | 7.59 | - |
| $T_j$ = bivalent sıcaklık | $P_{dh}$ | 11.3 | kW | $T_j$ = bivalent sıcaklık | $COP_d$ | 2.28 | - |
| $T_j$ = işletme sınır sıcaklığı | $P_{dh}$ | 9.8 | kW | $T_j$ = işletme sınır sıcaklığı | $COP_d$ | 1.89 | - |
| Hava-su ısı pompaları için: $T_j$ = – 15°C (Eğer TOL < – 20°C) | $P_{dh}$ | N/A | kW | Hava-su ısı pompaları için: Tj = – 15°C (if TOL < – 20°C) | $COP_d$ | N/A | - |
| Bivalent sıcaklık | $T_{biv}$ | -15 | °C | Hava-su ısı pompaları için: İşletme sınır sıcaklığı | TOL | -22 | °C |
| Isıtma için devir aralığı yetenekliği | $P_{cych}$ | N/A | kW | Döngü aralığı verimliliği | $COP_{cyc}$ | N/A | - |
| Değer kaybı katsayısı (**) | $C_{dh}$ | 0.9 | kW | Isıtma suyu işletme sınır sıcaklığı | WTOL | 65 | °C |
| Active mod dışındaki modlarda güç tüketimi | | | | İlave ısıtıcı | | | |
| Kapalı mod | $P_{OFF}$ | 0.014 | kW | | | | |
| Termostat-kapalı mod | $P_{TO}$ | 0.024 | kW | Nominal ısı çıkışı (**) | $p_{sup}$ | 4.2 | kw |
| Bekleme modu | $P_{SB}$ | 0.014 | kW | Enerji giriş türü | Elektrik | | |
| Krank kasa ısıtıcı modu | $P_{CK}$ | 0.000 | kW | | | | |

| **Diğer öğeler** | | | | | | | |
|---|---|---|---|---|---|---|---|
| Kapasite kontrolü | değişken | | | Hava-su ısı pompaları için: Nominal hava akış hızı, dış mekan | - | 6000 | $m^3/h$ |
| İç/dış mekan ses güç seviyesi | $L_{WA}$ | -/68 | dB | Su veya tuzlu su ile çalışan ısı pompaları için: Nominal tuzlu su veya su akış hızı, dış mekan ısı değiştirici | - | N/A | $m^3/h$ |
| Yıllık enerji tüketimi | $Q_{HE}$ | 8597 | kWh | | | | |
| Isı pompası kombi ısıtıcı için: | | | | | | | |
| **Bildirilen yük profili** | N/A | | | **Su ısıtma enerji verimliliği** | $\eta_{wh}$ | N/A | % |
| Günlük elektrik tüketimi | $Q_{elec}$ | N/A | kWh | Günlük yakıt tüketimi | $Q_{fuel}$ | N/A | kWh |
| Yıllık elektrik tüketimi | AEC | N/A | kWh | Yıllık yakıt tüketimi | AFC | N/A | GJ |
| İletişim bilgileri | Kılavuzun arka kapağına bakınız. | | | | | | |

(*) Isı pompası mekan ısıtıcıları ve ısı pompası kombi ısıtıcıları için, nominal ısı çıkışı (Prated) ısıtma tasarım yüküne (Pdesignh) eşittir ve ilave ısıtıcının (Psup) nominal ısı çıkışı, ilave ısıtma kapasitesine (sup(Tj)) eşittir.
(**) Eğer Cdh ölçümle belirlenmemişse, varsayılan bozunma katsayısı Cdh = 0.9'dur.

# Teknik Ozellikler

| | |
|---|---|
| Model(s): | 3-PH 16kW(ısınma 9kW);3-PH 16kW(ısınma 6kW);3-PH 16kW(ısınma 3kW);3-PH 16kW |
| Hava-su ısı pompası | evet |
| Su-su ısı pompası | hayır |
| Tuzlu su-su ısı pompası | hayır |
| Düşük sıcaklık ısı pompası | hayır |
| İlave ısıtıcı ile donatılmış | evet (için 3-PH 16kW(ısıtma 9kW));(3-PH 16kW(ısıtma 6kW);(3-PH 16kW(ısıtma 3kW);hayır (için 3-PH 16kW) |
| Isı pompası kombi ısıtıcı | hayır |
| Belirtilen iklim koşulu; | Ortalama |
| Parametreler orta sıcaklık uygulaması için belirtilmiştir. | |

| ÖĞE | Sembol | DEĞER | BİRİM | ÖĞE | Sembol | DEĞER | BİRİM |
|---|---|---|---|---|---|---|---|
| **Nominal ısı çıkışı (*)** | Prated | 13 | kW | **Mevsimsel mekan ısıtma enerji verimliliği** | $\eta_s$ | 136 | % |
| İç mekan sıcaklığı 20 °C ve dış mekan sıcaklığında kısmi yükte ısıtma için belirtilen kapasite $T_j$ | | | | İç mekan sıcaklığı 20°C ve dış mekan sıcaklığında kısmi yükte belirtilen ısıtma kapasitesi $T_j$ | | | |
| $T_j$ = – 7°C | $P_{dh}$ | 11.3 | kW | $T_j$ = – 7°C | $COP_d$ | 2.04 | - |
| $T_j$ = + 2°C | $P_{dh}$ | 7.3 | kW | $T_j$ = + 2°C | $COP_d$ | 3.33 | - |
| $T_j$ = + 7°C | $P_{dh}$ | 4.8 | kW | $T_j$ = + 7°C | $COP_d$ | 4.81 | - |
| $T_j$ = + 12°C | $P_{dh}$ | 4.0 | kW | $T_j$ = + 12°C | $COP_d$ | 7.36 | - |
| $T_j$ = bivalent sıcaklık | $P_{dh}$ | 11.3 | kW | $T_j$ = bivalent sıcaklık | $COP_d$ | 2.04 | - |
| $T_j$ = işletme sınır sıcaklığı | $P_{dh}$ | 11.3 | kW | $T_j$ = işletme sınır sıcaklığı | $COP_d$ | 1.78 | - |
| Hava-su ısı pompaları için: $T_j$ = – 15°C (Eğer TOL < – 20°C) | $P_{dh}$ | N/A | kW | Hava-su ısı pompaları için: Tj = – 15°C (if TOL < – 20°C) | $COP_d$ | N/A | - |
| Bivalent sıcaklık | $T_{biv}$ | -7 | °C | Hava-su ısı pompaları için: İşletme sınır sıcaklığı | TOL | -10 | °C |
| Isıtma için devir aralığı yetenekliği | $P_{cych}$ | N/A | kW | Döngü aralığı verimliliği | $COP_{cyc}$ | N/A | - |
| Değer kaybı katsayısı (**) | $C_{dh}$ | 0.9 | kW | Isıtma suyu işletme sınır sıcaklığı | WTOL | 65 | °C |
| Active mod dışındaki modlarda güç tüketimi | | | | İlave ısıtıcı | | | |
| Kapalı mod | $P_{OFF}$ | 0.014 | kW | | | | |
| Termostat-kapalı mod | $P_{TO}$ | 0.024 | kW | Nominal ısı çıkışı (**) | $p_{sup}$ | 1.7 | kw |
| Bekleme modu | $P_{SB}$ | 0.014 | kW | Enerji giriş türü | Elektrik | | |
| Krank kasa ısıtıcı modu | $P_{CK}$ | 0.000 | kW | | | | |

| **Diğer öğeler** | | | | | | | |
|---|---|---|---|---|---|---|---|
| Kapasite kontrolü | değişken | | | Hava-su ısı pompaları için: Nominal hava akış hızı, dış mekan | - | 6000 | $m^3/h$ |
| İç/dış mekan ses güç seviyesi | $L_{WA}$ | -/68 | dB | Su veya tuzlu su ile çalışan ısı pompaları için: Nominal tuzlu su veya su akış hızı, dış mekan ısı değiştirici | - | N/A | $m^3/h$ |
| Yıllık enerji tüketimi | $Q_{HE}$ | 7571 | kWh | | | | |
| Isı pompası kombi ısıtıcı için: | | | | | | | |
| **Bildirilen yük profili** | N/A | | | **Su ısıtma enerji verimliliği** | $\eta_{wh}$ | N/A | % |
| Günlük elektrik tüketimi | $Q_{elec}$ | N/A | kWh | Günlük yakıt tüketimi | $Q_{fuel}$ | N/A | kWh |
| Yıllık elektrik tüketimi | AEC | N/A | kWh | Yıllık yakıt tüketimi | AFC | N/A | GJ |
| İletişim bilgileri | Kılavuzun arka kapağına bakınız. | | | | | | |

(*) Isı pompası mekan ısıtıcıları ve ısı pompası kombi ısıtıcıları için, nominal ısı çıkışı (Prated) ısıtma tasarım yüküne (Pdesignh) eşittir ve ilave ısıtıcının (Psup) nominal ısı çıkışı, ilave ısıtma kapasitesine (sup(Tj)) eşittir.
(**) Eğer Cdh ölçümle belirlenmemişse, varsayılan bozunma katsayısı Cdh = 0.9'dur.

# Teknik Ozellikler

| | |
|---|---|
| Model(s): | 3-PH 16kW(ısınma 9kW);3-PH 16kW(ısınma 6kW);3-PH 16kW(ısınma 3kW);3-PH 16kW |
| Hava-su ısı pompası | evet |
| Su-su ısı pompası | hayır |
| Tuzlu su-su ısı pompası | hayır |
| Düşük sıcaklık ısı pompası | hayır |
| İlave ısıtıcı ile donatılmış | evet (için 3-PH 16kW(ısıtma 9kW));(3-PH 16kW(ısıtma 6kW);(3-PH 16kW(ısıtma 3kW);hayır (için 3-PH 16kW) |
| Isı pompası kombi ısıtıcı | hayır |
| Belirtilen iklim koşulu; | daha sıcak |
| Parametreler orta sıcaklık uygulaması için belirtilmiştir. | |

| ÖĞE | Sembol | DEĞER | BİRİM | ÖĞE | Sembol | DEĞER | BİRİM |
|---|---|---|---|---|---|---|---|
| **Nominal ısı çıkışı (*)** | Prated | 14 | kW | **Mevsimsel mekan ısıtma enerji verimliliği** | $\eta_s$ | 171 | % |
| İç mekan sıcaklığı 20 °C ve dış mekan sıcaklığında kısmi yükte ısıtma için belirtilen kapasite $T_j$ | | | | İç mekan sıcaklığı 20°C ve dış mekan sıcaklığında kısmi yükte belirtilen ısıtma kapasitesi $T_j$ | | | |
| $T_j$ = – 7°C | $P_{dh}$ | N/A | kW | $T_j$ = – 7°C | $COP_d$ | N/A | - |
| $T_j$ = + 2°C | $P_{dh}$ | 13.2 | kW | $T_j$ = + 2°C | $COP_d$ | 2.32 | - |
| $T_j$ = + 7°C | $P_{dh}$ | 9.1 | kW | $T_j$ = + 7°C | $COP_d$ | 3.70 | - |
| $T_j$ = + 12°C | $P_{dh}$ | 4.1 | kW | $T_j$ = + 12°C | $COP_d$ | 5.80 | - |
| $T_j$ = bivalent sıcaklık | $P_{dh}$ | 9.1 | kW | $T_j$ = bivalent sıcaklık | $COP_d$ | 3.70 | - |
| $T_j$ = işletme sınır sıcaklığı | $P_{dh}$ | 13.2 | kW | $T_j$ = işletme sınır sıcaklığı | $COP_d$ | 2.32 | - |
| Hava-su ısı pompaları için: $T_j$ = – 15°C (Eğer TOL < – 20°C) | $P_{dh}$ | N/A | kW | Hava-su ısı pompaları için: Tj = – 15°C (if TOL < – 20°C) | $COP_d$ | N/A | - |
| Bivalent sıcaklık | $T_{biv}$ | 7 | °C | Hava-su ısı pompaları için: İşletme sınır sıcaklığı | TOL | 2 | °C |
| Isıtma için devir aralığı yetenekliği | $P_{cych}$ | N/A | kW | Döngü aralığı verimliliği | $COP_{cyc}$ | N/A | - |
| Değer kaybı katsayısı (**) | $C_{dh}$ | 0.9 | kW | Isıtma suyu işletme sınır sıcaklığı | WTOL | 65 | °C |
| Active mod dışındaki modlarda güç tüketimi | | | | İlave ısıtıcı | | | |
| Kapalı mod | $P_{OFF}$ | 0.014 | kW | | | | |
| Termostat-kapalı mod | $P_{TO}$ | 0.024 | kW | Nominal ısı çıkışı (**) | $p_{sup}$ | 0.8 | kw |
| Bekleme modu | $P_{SB}$ | 0.014 | kW | Enerji giriş türü | Elektrik | | |
| Krank kasa ısıtıcı modu | $P_{CK}$ | 0.000 | kW | | | | |

| **Diğer öğeler** | | | | | | | |
|---|---|---|---|---|---|---|---|
| Kapasite kontrolü | değişken | | | Hava-su ısı pompaları için: Nominal hava akış hızı, dış mekan | - | 6000 | $m^3/h$ |
| İç/dış mekan ses güç seviyesi | $L_{WA}$ | -/68 | dB | Su veya tuzlu su ile çalışan ısı pompaları için: Nominal tuzlu su veya su akış hızı, dış mekan ısı değiştirici | - | N/A | $m^3/h$ |
| Yıllık enerji tüketimi | $Q_{HE}$ | 4321 | kWh | | | | |
| Isı pompası kombi ısıtıcı için: | | | | | | | |
| **Bildirilen yük profili** | N/A | | | **Su ısıtma enerji verimliliği** | $\eta_{wh}$ | N/A | % |
| Günlük elektrik tüketimi | $Q_{elec}$ | N/A | kWh | Günlük yakıt tüketimi | $Q_{fuel}$ | N/A | kWh |
| Yıllık elektrik tüketimi | AEC | N/A | kWh | Yıllık yakıt tüketimi | AFC | N/A | GJ |
| İletişim bilgileri | Kılavuzun arka kapağına bakınız. | | | | | | |

(*) Isı pompası mekan ısıtıcıları ve ısı pompası kombi ısıtıcıları için, nominal ısı çıkışı (Prated) ısıtma tasarım yüküne (Pdesignh) eşittir ve ilave ısıtıcının (Psup) nominal ısı çıkışı, ilave ısıtma kapasitesine (sup(Tj)) eşittir.
(**) Eğer Cdh ölçümle belirlenmemişse, varsayılan bozunma katsayısı Cdh = 0.9'dur.

# Teknik Ozellikler

| | |
|---|---|
| Model(s): | 3-PH 16kW(ısınma 9kW);3-PH 16kW(ısınma 6kW);3-PH 16kW(ısınma 3kW);3-PH 16kW |
| Hava-su ısı pompası | evet |
| Su-su ısı pompası | hayır |
| Tuzlu su-su ısı pompası | hayır |
| Düşük sıcaklık ısı pompası | hayır |
| İlave ısıtıcı ile donatılmış | evet (için 3-PH 16kW(ısıtma 9kW));(3-PH 16kW(ısıtma 6kW);(3-PH 16kW(ısıtma 3kW);hayır (için 3-PH 16kW) |
| Isı pompası kombi ısıtıcı | hayır |
| Belirtilen iklim koşulu; | daha soğuk |
| Parametreler orta sıcaklık uygulaması için belirtilmiştir. | |

| ÖĞE | Sembol | DEĞER | BİRİM | ÖĞE | Sembol | DEĞER | BİRİM |
|---|---|---|---|---|---|---|---|
| **Nominal ısı çıkışı (*)** | $P_{rated}$ | 12 | kW | **Mevsimsel mekan ısıtma enerji verimliliği** | $H_s$ | 121 | % |
| İç mekan sıcaklığı 20 °C ve dış mekan sıcaklığında kısmi yükte ısıtma için belirtilen kapasite $T_j$ | | | | İç mekan sıcaklığı 20°C ve dış mekan sıcaklığında kısmi yükte belirtilen ısıtma kapasitesi $T_j$ | | | |
| $T_j$ = – 7°C | $P_{dh}$ | 7.8 | kW | $T_j$ = – 7°C | $COP_d$ | 2.64 | - |
| $T_j$ = + 2°C | $P_{dh}$ | 4.5 | kW | $T_j$ = + 2°C | $COP_d$ | 3.78 | - |
| $T_j$ = + 7°C | $P_{dh}$ | 3.2 | kW | $T_j$ = + 7°C | $COP_d$ | 4.87 | - |
| $T_j$ = + 12°C | $P_{dh}$ | 3.7 | kW | $T_j$ = + 12°C | $COP_d$ | 6.40 | - |
| $T_j$ = bivalent sıcaklık | $P_{dh}$ | 9.6 | kW | $T_j$ = bivalent sıcaklık | $COP_d$ | 1.85 | - |
| $T_j$ = işletme sınır sıcaklığı | $P_{dh}$ | 5.1 | kW | $T_j$ = işletme sınır sıcaklığı | $COP_d$ | 1.04 | - |
| Hava-su ısı pompaları için: $T_j$ = – 15°C (Eğer TOL < – 20°C) | $P_{dh}$ | N/A | kW | Hava-su ısı pompaları için: Tj = – 15°C (if TOL < – 20°C) | $COP_d$ | N/A | - |
| Bivalent sıcaklık | $T_{biv}$ | -15 | °C | Hava-su ısı pompaları için: İşletme sınır sıcaklığı | TOL | -22 | °C |
| Isıtma için devir aralığı yetenekliği | $P_{cych}$ | N/A | kW | Döngü aralığı verimliliği | $COP_{cyc}$ | N/A | - |
| Değer kaybı katsayısı (**) | $C_{dh}$ | 0.9 | kW | Isıtma suyu işletme sınır sıcaklığı | WTOL | 65 | °C |
| Active mod dışındaki modlarda güç tüketimi | | | | İlave ısıtıcı | | | |
| Kapalı mod | $P_{OFF}$ | 0.014 | kW | | | | |
| Termostat-kapalı mod | $P_{TO}$ | 0.024 | kW | Nominal ısı çıkışı (**) | $p_{sup}$ | 6.9 | kw |
| Bekleme modu | $P_{SB}$ | 0.014 | kW | Enerji giriş türü | Elektrik | | |
| Krank kasa ısıtıcı modu | $P_{CK}$ | 0.000 | kW | | | | |

| **Diğer öğeler** | | | | | | | |
|---|---|---|---|---|---|---|---|
| Kapasite kontrolü | değişken | | | Hava-su ısı pompaları için: Nominal hava akış hızı, dış mekan | - | 6000 | $m^3/h$ |
| İç/dış mekan ses güç seviyesi | $L_{WA}$ | -/68 | dB | Su veya tuzlu su ile çalışan ısı pompaları için: Nominal tuzlu su veya su akış hızı, dış mekan ısı değiştirici | - | N/A | $m^3/h$ |
| Yıllık enerji tüketimi | $Q_{HE}$ | 9356 | kWh | | | | |
| Isı pompası kombi ısıtıcı için: | | | | | | | |
| **Bildirilen yük profili** | N/A | | | **Su ısıtma enerji verimliliği** | $\eta_{wh}$ | N/A | % |
| Günlük elektrik tüketimi | $Q_{elec}$ | N/A | kWh | Günlük yakıt tüketimi | $Q_{fuel}$ | N/A | kWh |
| Yıllık elektrik tüketimi | AEC | N/A | kWh | Yıllık yakıt tüketimi | AFC | N/A | GJ |
| İletişim bilgileri | Kılavuzun arka kapağına bakınız. | | | | | | |

(*) Isı pompası mekan ısıtıcıları ve ısı pompası kombi ısıtıcıları için, nominal ısı çıkışı (Prated) ısıtma tasarım yüküne (Pdesignh) eşittir ve ilave ısıtıcının (Psup) nominal ısı çıkışı, ilave ısıtma kapasitesine (sup(Tj)) eşittir.
(**) Eğer Cdh ölçümle belirlenmemişse, varsayılan bozunma katsayısı Cdh = 0.9'dur.

# Konfor soğutucular için bilgi gereksinimleri

| | |
|---|---|
| Model(s): | 4kW(ısınma 3kW);4kW |
| Soğutucunun dış tarafındaki ısı değiştirici | Hava-su |
| Soğutucunun iç tarafındaki ısı değiştirici | Su |
| Tür: | Kompresör tahrikli buhar sıkıştırma |
| Kompresör sürücüsü | Elektrik motoru |

| ÖĞE | Sembol | DEĞER | BİRİM | ÖĞE | Sembol | DEĞER | BİRİM |
|---|---|---|---|---|---|---|---|
| **Nominal ısı çıkışı (*)** | $P_{rated.c}$ | 4.6 | kW | **Mevsimlik mekan ısıtma enerji verimliliği** | $H_{s.c}$ | 216 | % |
| Bildirilen soğutma kapasitesi, belirli dış sıcaklıkta kısmi yük için $T_j$ | | | | Bildirilen soğutma için enerji verimlilik oranı, belirli dış sıcaklıkta kısmi yük için$T_j$ | | | |
| $T_j$ = + 35°C | $P_{dc}$ | 4.6 | kW | $T_j$ =+35°C | EERd | 3.38 | - |
| $T_j$ = + 30°C | $P_{dc}$ | 3.5 | kW | $T_j$ = +30°C | EERd | 4.60 | - |
| $T_j$ = + 25°C | $P_{dc}$ | 2.2 | kW | $T_j$ = + 25°C | EERd | 6.23 | - |
| $T_j$ = + 20°C | $P_{dc}$ | 1.0 | kW | $T_j$ = + 20°C | EERd | 7.69 | - |
| Soğutucunun bozunma katsayısı (*) | $C_{dc}$ | 0.9 | kW | | | | |
| Aktif mod dışındaki modlarda güç tüketimi | | | | | | | |
| Kapalı mod | $P_{OFF}$ | 0.010 | kW | Krank kasa ısıtıcı modu | $P_{ck}$ | 0.000 | KW |
| Termostat kapalı modu | $P_{TO}$ | 0.010 | kW | Bekleme modu | $P_{SB}$ | 0.010 | KW |
| Diğer öğeler | | | | | | | |
| Kapasite kontrolü | değişken | | | **Hava-su konfor soğutucuları için; hava akış hızı, dış mekan ölçülmüştür.** | - | 2600 | $m^3/h$ |
| Ses güç seviyesi, iç/dış mekan | $L_{WA}$ | -/56 | dB | Su/tuzlu su ile çalışan soğutucular için; Nominal tuzlu su veya su akış hızı, dış mekan ısı değiştiricisi | - | N/A | $m^3/h$ |
| Azot oksit emisyonları (uygulanabilirse) | NOx(**) | - | Mg/kwh giriş GCV | | | | |
| Soğutucunun GWP değeri | - | 675 | Kg $CO_2$ eq (100yıllar) | | | | |
| Kullanılan standart değerlendirme koşulları | Düşük sıcaklık uygulaması | | | | | | |
| İletişim bilgileri | Kılavuzun arka kapağına bakınız | | | | | | |

(**) Eğer $C_{dC}$ ölçümle belirlenmemişse, soğutucuların varsayılan bozunma katsayısı 0.9 olacaktır.

(**) 26 Eylül 2018 tarihinden itibaren.

# Konfor soğutucular için bilgi gereksinimleri

| | |
|---|---|
| Model(s): | 4kW(ısınma 3kW);4kW |
| Soğutucunun dış tarafındaki ısı değiştirici | Hava-su |
| Soğutucunun iç tarafındaki ısı değiştirici | Su |
| Tür: | Kompresör tahrikli buhar sıkıştırma |
| Kompresör sürücüsü | Elektrik motoru |

| ÖĞE | Sembol | DEĞER | BİRİM | ÖĞE | Sembol | DEĞER | BİRİM |
|---|---|---|---|---|---|---|---|
| **Nominal ısı çıkışı (*)** | Prated.c | 4.5 | kW | **Mevsimlik mekan ısıtma enerji verimliliği** | $H_{s.c}$ | 305 | % |
| Bildirilen soğutma kapasitesi, belirli dış sıcaklıkta kısmi yük için $T_j$ | | | | Bildirilen soğutma için enerji verimlilik oranı, belirli dış sıcaklıkta kısmi yük için$T_j$ | | | |
| $T_j$ = + 35°C | $P_{dc}$ | 4.5 | kW | $T_j$ =+35°C | EERd | 5.64 | - |
| $T_j$ = + 30°C | $P_{dc}$ | 3.4 | kW | $T_j$ = +30°C | EERd | 7.47 | - |
| $T_j$ = + 25°C | $P_{dc}$ | 2.3 | kW | $T_j$ = + 25°C | EERd | 8.97 | - |
| $T_j$ = + 20°C | $P_{dc}$ | 1.0 | kW | $T_j$ = + 20°C | EERd | 8.81 | - |
| Soğutucunun bozunma katsayısı (*) | $C_{dc}$ | 0.9 | kW | | | | |
| Aktif mod dışındaki modlarda güç tüketimi | | | | | | | |
| Kapalı mod | $P_{OFF}$ | 0.010 | kW | Krank kasa ısıtıcı modu | $P_{CK}$ | 0.000 | KW |
| Termostat kapalı modu | $P_{TO}$ | 0.010 | kW | Bekleme modu | $P_{SB}$ | 0.010 | KW |
| Diğer öğeler | | | | | | | |
| Kapasite kontrolü | değişken | | | **Hava-su konfor soğutucuları için; hava akış hızı, dış mekan ölçülmüştür.** | - | 2600 | $m^3/h$ |
| Ses güç seviyesi, iç/dış mekan | $L_{WA}$ | -/56 | dB | Su/tuzlu su ile çalışan soğutucular için; Nominal tuzlu su veya su akış hızı, dış mekan ısı değiştiricisi | - | N/A | $m^3/h$ |
| Azot oksit emisyonları (uygulanabilirse) | NOx(**) | - | Mg/kwh giriş GCV | | | | |
| Soğutucunun GWP değeri | - | 675 | Kg $CO_2$ eq (100yıllar) | | | | |
| Kullanılan standart değerlendirme koşulları | Orta sıcaklık uygulaması | | | | | | |
| İletişim bilgileri | Kılavuzun arka kapağına bakınız | | | | | | |

(**) Eğer $C_{dC}$ ölçümle belirlenmemişse, soğutucuların varsayılan bozunma katsayısı 0.9 olacaktır.

(**) 26 Eylül 2018 tarihinden itibaren.

# Konfor soğutucular için bilgi gereksinimleri

| | |
|---|---|
| Model(s): | 6kW(ısınma 3kW);6kW |
| Soğutucunun dış tarafındaki ısı değiştirici | Hava-su |
| Soğutucunun iç tarafındaki ısı değiştirici | Su |
| Tür: | Kompresör tahrikli buhar sıkıştırma |
| Kompresör sürücüsü | Elektrik motoru |

| ÖĞE | Sembol | DEĞER | BİRİM | ÖĞE | Sembol | DEĞER | BİRİM |
|---|---|---|---|---|---|---|---|
| **Nominal ısı çıkışı (*)** | Prated.c | 6.1 | kW | **Mevsimlik mekan ısıtma enerji verimliliği** | $H_{s.c}$ | 207 | % |
| Bildirilen soğutma kapasitesi, belirli dış sıcaklıkta kısmi yük için $T_j$ | | | | Bildirilen soğutma için enerji verimlilik oranı, belirli dış sıcaklıkta kısmi yük için$T_j$ | | | |
| $T_j$ = + 35°C | $P_{dc}$ | 6.1 | kW | $T_j$ =+35°C | EERd | 3.22 | - |
| $T_j$ = + 30°C | $P_{dc}$ | 4.7 | kW | $T_j$ = +30°C | EERd | 4.68 | - |
| $T_j$ = + 25°C | $P_{dc}$ | 2.8 | kW | $T_j$ = + 25°C | EERd | 6.25 | - |
| $T_j$ = + 20°C | $P_{dc}$ | 1.2 | kW | $T_j$ = + 20°C | EERd | 6.07 | - |
| Soğutucunun bozunma katsayısı (*) | $C_{dc}$ | 0.9 | kW | | | | |
| Aktif mod dışındaki modlarda güç tüketimi | | | | | | | |
| Kapalı mod | $P_{OFF}$ | 0.010 | kW | Krank kasa ısıtıcı modu | $P_{CK}$ | 0.000 | KW |
| Termostat kapalı modu | $P_{TO}$ | 0.010 | kW | Bekleme modu | $P_{SB}$ | 0.010 | KW |
| Diğer öğeler | | | | | | | |
| Kapasite kontrolü | değişken | | | **Hava-su konfor soğutucuları için; hava akış hızı, dış mekan ölçülmüştür.** | - | 2800 | m³/h |
| Ses güç seviyesi, iç/dış mekan | $L_{WA}$ | -/59 | dB | Su/tuzlu su ile çalışan soğutucular için; Nominal tuzlu su veya su akış hızı, dış mekan ısı değiştiricisi | - | N/A | m³/h |
| Azot oksit emisyonları (uygulanabilirse) | NOx(**) | - | Mg/kwh giriş GCV | | | | |
| Soğutucunun GWP değeri | - | 675 | Kg $CO_2$ eq (100yıllar) | | | | |
| Kullanılan standart değerlendirme koşulları | Düşük sıcaklık uygulaması | | | | | | |
| İletişim bilgileri | Kılavuzun arka kapağına bakınız | | | | | | |

(**) Eğer $C_{dC}$ ölçümle belirlenmemişse, soğutucuların varsayılan bozunma katsayısı 0.9 olacaktır.

(**) 26 Eylül 2018 tarihinden itibaren.

# Konfor soğutucular için bilgi gereksinimleri

| | |
|---|---|
| Model(s): | 6kW(ısınma 3kW);6kW |
| Soğutucunun dış tarafındaki ısı değiştirici | Hava-su |
| Soğutucunun iç tarafındaki ısı değiştirici | Su |
| Tür: | Kompresör tahrikli buhar sıkıştırma |
| Kompresör sürücüsü | Elektrik motoru |

| ÖĞE | Sembol | DEĞER | BİRİM | ÖĞE | Sembol | DEĞER | BİRİM |
|---|---|---|---|---|---|---|---|
| **Nominal ısı çıkışı (*)** | Prated.c | 6.1 | kW | **Mevsimlik mekan ısıtma enerji verimliliği** | $H_{s.c}$ | 319 | % |
| Bildirilen soğutma kapasitesi, belirli dış sıcaklıkta kısmi yük için $T_j$ | | | | Bildirilen soğutma için enerji verimlilik oranı, belirli dış sıcaklıkta kısmi yük için$T_j$ | | | |
| $T_j$ = + 35°C | $P_{dc}$ | 6.1 | kW | $T_j$ =+35°C | EERd | 5.19 | - |
| $T_j$ = + 30°C | $P_{dc}$ | 4.4 | kW | $T_j$ = +30°C | EERd | 7.22 | - |
| $T_j$ = + 25°C | $P_{dc}$ | 2.9 | kW | $T_j$ = + 25°C | EERd | 10.09 | - |
| $T_j$ = + 20°C | $P_{dc}$ | 1.3 | kW | $T_j$ = + 20°C | EERd | 8.82 | - |
| Soğutucunun bozunma katsayısı (*) | $C_{dc}$ | 0.9 | kW | | | | |
| Aktif mod dışındaki modlarda güç tüketimi | | | | | | | |
| Kapalı mod | $P_{OFF}$ | 0.010 | kW | Krank kasa ısıtıcı modu | $P_{CK}$ | 0.000 | KW |
| Termostat kapalı modu | $P_{TO}$ | 0.010 | kW | Bekleme modu | $P_{SB}$ | 0.010 | KW |
| Diğer öğeler | | | | | | | |
| Kapasite kontrolü | değişken | | | **Hava-su konfor soğutucuları için; hava akış hızı, dış mekan ölçülmüştür.** | - | 2800 | m³/h |
| Ses güç seviyesi, iç/dış mekan | $L_{WA}$ | -/59 | dB | Su/tuzlu su ile çalışan soğutucular için; Nominal tuzlu su veya su akış hızı, dış mekan ısı değiştiricisi | - | N/A | m³/h |
| Azot oksit emisyonları (uygulanabilirse) | NOx(**) | - | Mg/kwh giriş GCV | | | | |
| Soğutucunun GWP değeri | - | 675 | Kg $CO_2$ eq (100yıllar) | | | | |
| Kullanılan standart değerlendirme koşulları | Orta sıcaklık uygulaması | | | | | | |
| İletişim bilgileri | Kılavuzun arka kapağına bakınız | | | | | | |

(**) Eğer $C_{dC}$ ölçümle belirlenmemişse, soğutucuların varsayılan bozunma katsayısı 0.9 olacaktır.

(**) 26 Eylül 2018 tarihinden itibaren.

# Konfor soğutucular için bilgi gereksinimleri

| | |
|---|---|
| Model(s): | 8kW(ısınma 3kW);8kW |
| Soğutucunun dış tarafındaki ısı değiştirici | Hava-su |
| Soğutucunun iç tarafındaki ısı değiştirici | Su |
| Tür: | Kompresör tahrikli buhar sıkıştırma |
| Kompresör sürücüsü | Elektrik motoru |

| ÖĞE | Sembol | DEĞER | BİRİM | ÖĞE | Sembol | DEĞER | BİRİM |
|---|---|---|---|---|---|---|---|
| **Nominal ısı çıkışı (*)** | $P_{rated.c}$ | 7 | kW | **Mevsimlik mekan ısıtma enerji verimliliği** | $H_{s.c}$ | 214 | % |
| Bildirilen soğutma kapasitesi, belirli dış sıcaklıkta kısmi yük için $T_j$ | | | | Bildirilen soğutma için enerji verimlilik oranı, belirli dış sıcaklıkta kısmi yük için$T_j$ | | | |
| $T_j$ = + 35°C | $P_{dc}$ | 7.0 | kW | $T_j$ =+35°C | $EER_d$ | 3.38 | - |
| $T_j$ = + 30°C | $P_{dc}$ | 5.7 | kW | $T_j$ = +30°C | $EER_d$ | 4.60 | - |
| $T_j$ = + 25°C | $P_{dc}$ | 3.7 | kW | $T_j$ = + 25°C | $EER_d$ | 6.23 | - |
| $T_j$ = + 20°C | $P_{dc}$ | 1.7 | kW | $T_j$ = + 20°C | $EER_d$ | 7.69 | - |
| Soğutucunun bozunma katsayısı (*) | $C_{dc}$ | 0.9 | kW | | | | |
| Aktif mod dışındaki modlarda güç tüketimi | | | | | | | |
| Kapalı mod | $P_{OFF}$ | 0.014 | kW | Krank kasa ısıtıcı modu | $P_{CK}$ | 0.000 | KW |
| Termostat kapalı modu | $P_{TO}$ | 0.024 | kW | Bekleme modu | $P_{SB}$ | 0.014 | KW |
| Diğer öğeler | | | | | | | |
| Kapasite kontrolü | değişken | | | **Hava-su konfor soğutucuları için; hava akış hızı, dış mekan ölçülmüştür.** | - | 4000 | $m^3/h$ |
| Ses güç seviyesi, iç/dış mekan | $L_{WA}$ | -/60 | dB | Su/tuzlu su ile çalışan soğutucular için; Nominal tuzlu su veya su akış hızı, dış mekan ısı değiştiricisi | - | N/A | $m^3/h$ |
| Azot oksit emisyonları (uygulanabilirse) | NOx(**) | - | Mg/kwh giriş GCV | | | | |
| Soğutucunun GWP değeri | - | 675 | Kg $CO_2$ eq (100yıllar) | | | | |
| Kullanılan standart değerlendirme koşulları | Düşük sıcaklık uygulaması | | | | | | |
| İletişim bilgileri | Kılavuzun arka kapağına bakınız | | | | | | |

(**) Eğer $C_{dC}$ ölçümle belirlenmemişse, soğutucuların varsayılan bozunma katsayısı 0.9 olacaktır.

(**) 26 Eylül 2018 tarihinden itibaren.

# Konfor soğutucular için bilgi gereksinimleri

| | |
|---|---|
| Model(s): | 8kW(ısınma 3kW);8kW |
| Soğutucunun dış tarafındaki ısı değiştirici | Hava-su |
| Soğutucunun iç tarafındaki ısı değiştirici | Su |
| Tür: | Kompresör tahrikli buhar sıkıştırma |
| Kompresör sürücüsü | Elektrik motoru |

| ÖĞE | Sembol | DEĞER | BİRİM | ÖĞE | Sembol | DEĞER | BİRİM |
|---|---|---|---|---|---|---|---|
| **Nominal ısı çıkışı (*)** | $P_{rated.c}$ | 8 | kW | **Mevsimlik mekan ısıtma enerji verimliliği** | $H_{s.c}$ | 318 | % |
| Bildirilen soğutma kapasitesi, belirli dış sıcaklıkta kısmi yük için $T_j$ | | | | Bildirilen soğutma için enerji verimlilik oranı, belirli dış sıcaklıkta kısmi yük için$T_j$ | | | |
| $T_j$ = + 35°C | $P_{dc}$ | 8.0 | kW | $T_j$ =+35°C | $EER_d$ | 4.95 | - |
| $T_j$ = + 30°C | $P_{dc}$ | 6.4 | kW | $T_j$ = +30°C | $EER_d$ | 6.61 | - |
| $T_j$ = + 25°C | $P_{dc}$ | 4.3 | kW | $T_j$ = + 25°C | $EER_d$ | 9.06 | - |
| $T_j$ = + 20°C | $P_{dc}$ | 1.8 | kW | $T_j$ = + 20°C | $EER_d$ | 13.14 | - |
| Soğutucunun bozunma katsayısı (*) | $C_{dc}$ | 0.9 | kW | | | | |
| Aktif mod dışındaki modlarda güç tüketimi | | | | | | | |
| Kapalı mod | $P_{OFF}$ | 0.014 | kW | Krank kasa ısıtıcı modu | $P_{CK}$ | 0.000 | KW |
| Termostat kapalı modu | $P_{TO}$ | 0.024 | kW | Bekleme modu | $P_{SB}$ | 0.014 | KW |
| Diğer öğeler | | | | | | | |
| Kapasite kontrolü | değişken | | | **Hava-su konfor soğutucuları için; hava akış hızı, dış mekan ölçülmüştür.** | - | 4000 | $m^3/h$ |
| Ses güç seviyesi, iç/dış mekan | $L_{WA}$ | -/60 | dB | Su/tuzlu su ile çalışan soğutucular için; Nominal tuzlu su veya su akış hızı, dış mekan ısı değiştiricisi | - | N/A | $m^3/h$ |
| Azot oksit emisyonları (uygulanabilirse) | NOx(**) | - | Mg/kwh giriş GCV | | | | |
| Soğutucunun GWP değeri | - | 675 | Kg $CO_2$ eq (100yıllar) | | | | |
| Kullanılan standart değerlendirme koşulları | Orta sıcaklık uygulaması | | | | | | |
| İletişim bilgileri | Kılavuzun arka kapağına bakınız | | | | | | |

(**) Eğer $C_{dC}$ ölçümle belirlenmemişse, soğutucuların varsayılan bozunma katsayısı 0.9 olacaktır.

(**) 26 Eylül 2018 tarihinden itibaren.

# Konfor soğutucular için bilgi gereksinimleri

| | |
|---|---|
| Model(s): | 10kW(ısınma 3kW);10kW |
| Soğutucunun dış tarafındaki ısı değiştirici | Hava-su |
| Soğutucunun iç tarafındaki ısı değiştirici | Su |
| Tür: | Kompresör tahrikli buhar sıkıştırma |
| Kompresör sürücüsü | Elektrik motoru |

| ÖĞE | Sembol | DEĞER | BİRİM | ÖĞE | Sembol | DEĞER | BİRİM |
|---|---|---|---|---|---|---|---|
| **Nominal ısı çıkışı (*)** | $P_{rated.c}$ | 8 | kW | **Mevsimlik mekan ısıtma enerji verimliliği** | $H_{s.c}$ | 212 | % |
| Bildirilen soğutma kapasitesi, belirli dış sıcaklıkta kısmi yük için $T_j$ | | | | Bildirilen soğutma için enerji verimlilik oranı, belirli dış sıcaklıkta kısmi yük için$T_j$ | | | |
| $T_j$ = + 35°C | $P_{dc}$ | 8.1 | kW | $T_j$ =+35°C | $EER_d$ | 3.16 | - |
| $T_j$ = + 30°C | $P_{dc}$ | 6.6 | kW | $T_j$ = +30°C | $EER_d$ | 4.38 | - |
| $T_j$ = + 25°C | $P_{dc}$ | 4.3 | kW | $T_j$ = + 25°C | $EER_d$ | 6.18 | - |
| $T_j$ = + 20°C | $P_{dc}$ | 1.9 | kW | $T_j$ = + 20°C | $EER_d$ | 8.17 | - |
| Soğutucunun bozunma katsayısı (*) | $C_{dc}$ | 0.9 | kW | | | | |
| Aktif mod dışındaki modlarda güç tüketimi | | | | | | | |
| Kapalı mod | $P_{OFF}$ | 0.014 | kW | Krank kasa ısıtıcı modu | $P_{CK}$ | 0.000 | KW |
| Termostat kapalı modu | $P_{TO}$ | 0.024 | kW | Bekleme modu | $P_{SB}$ | 0.014 | KW |
| Diğer öğeler | | | | | | | |
| Kapasite kontrolü | değişken | | | **Hava-su konfor soğutucuları için; hava akış hızı, dış mekan ölçülmüştür.** | - | 4500 | $m^3/h$ |
| Ses güç seviyesi, iç/dış mekan | $L_{WA}$ | -/61 | dB | Su/tuzlu su ile çalışan soğutucular için; Nominal tuzlu su veya su akış hızı, dış mekan ısı değiştiricisi | - | N/A | $m^3/h$ |
| Azot oksit emisyonları (uygulanabilirse) | NOx(**) | - | Mg/kwh giriş GCV | | | | |
| Soğutucunun GWP değeri | - | 675 | Kg $CO_2$ eq (100yıllar) | | | | |
| Kullanılan standart değerlendirme koşulları | Düşük sıcaklık uygulaması | | | | | | |
| İletişim bilgileri | Kılavuzun arka kapağına bakınız | | | | | | |

(**) Eğer $C_{dC}$ ölçümle belirlenmemişse, soğutucuların varsayılan bozunma katsayısı 0.9 olacaktır.

(**) 26 Eylül 2018 tarihinden itibaren.

# Konfor soğutucular için bilgi gereksinimleri

| | |
|---|---|
| Model(s): | 10kW(ısınma 3kW);10kW |
| Soğutucunun dış tarafındaki ısı değiştirici | Hava-su |
| Soğutucunun iç tarafındaki ısı değiştirici | Su |
| Tür: | Kompresör tahrikli buhar sıkıştırma |
| Kompresör sürücüsü | Elektrik motoru |

| ÖĞE | Sembol | DEĞER | BİRİM | ÖĞE | Sembol | DEĞER | BİRİM |
|---|---|---|---|---|---|---|---|
| **Nominal ısı çıkışı (*)** | $P_{rated.c}$ | 10 | kW | **Mevsimlik mekan ısıtma enerji verimliliği** | $H_{s.c}$ | 307 | % |
| Bildirilen soğutma kapasitesi, belirli dış sıcaklıkta kısmi yük için $T_j$ | | | | Bildirilen soğutma için enerji verimlilik oranı, belirli dış sıcaklıkta kısmi yük için$T_j$ | | | |
| $T_j$ = + 35°C | $P_{dc}$ | 9.5 | kW | $T_j$ =+35°C | $EER_d$ | 4.56 | - |
| $T_j$ = + 30°C | $P_{dc}$ | 7.7 | kW | $T_j$ = +30°C | $EER_d$ | 6.33 | - |
| $T_j$ = + 25°C | $P_{dc}$ | 4.9 | kW | $T_j$ = + 25°C | $EER_d$ | 8.48 | - |
| $T_j$ = + 20°C | $P_{dc}$ | 2.3 | kW | $T_j$ = + 20°C | $EER_d$ | 13.19 | - |
| Soğutucunun bozunma katsayısı (*) | $C_{dc}$ | 0.9 | kW | | | | |
| Aktif mod dışındaki modlarda güç tüketimi | | | | | | | |
| Kapalı mod | $P_{OFF}$ | 0.014 | kW | Krank kasa ısıtıcı modu | $P_{CK}$ | 0.000 | KW |
| Termostat kapalı modu | $P_{TO}$ | 0.024 | kW | Bekleme modu | $P_{SB}$ | 0.014 | KW |
| Diğer öğeler | | | | | | | |
| Kapasite kontrolü | değişken | | | **Hava-su konfor soğutucuları için; hava akış hızı, dış mekan ölçülmüştür.** | - | 4500 | $m^3/h$ |
| Ses güç seviyesi, iç/dış mekan | $L_{WA}$ | -/61 | dB | Su/tuzlu su ile çalışan soğutucular için; Nominal tuzlu su veya su akış hızı, dış mekan ısı değiştiricisi | - | N/A | $m^3/h$ |
| Azot oksit emisyonları (uygulanabilirse) | NOx(**) | - | Mg/kwh giriş GCV | | | | |
| Soğutucunun GWP değeri | - | 675 | Kg $CO_2$ eq (100yıllar) | | | | |
| Kullanılan standart değerlendirme koşulları | Orta sıcaklık uygulaması | | | | | | |
| İletişim bilgileri | Kılavuzun arka kapağına bakınız | | | | | | |

(**) Eğer $C_{dC}$ ölçümle belirlenmemişse, soğutucuların varsayılan bozunma katsayısı 0.9 olacaktır.

(**) 26 Eylül 2018 tarihinden itibaren.

# Konfor soğutucular için bilgi gereksinimleri

| | |
|---|---|
| Model(s): | 10kW(ısınma 3kW);10kW |
| Soğutucunun dış tarafındaki ısı değiştirici | Hava-su |
| Soğutucunun iç tarafındaki ısı değiştirici | Su |
| Tür: | Kompresör tahrikli buhar sıkıştırma |
| Kompresör sürücüsü | Elektrik motoru |

| ÖĞE | Sembol | DEĞER | BİRİM | ÖĞE | Sembol | DEĞER | BİRİM |
|---|---|---|---|---|---|---|---|
| **Nominal ısı çıkışı (*)** | $P_{rated.c}$ | 12 | kW | **Mevsimlik mekan ısıtma enerji verimliliği** | $H_{s.c}$ | 201 | % |
| Bildirilen soğutma kapasitesi, belirli dış sıcaklıkta kısmi yük için $T_j$ | | | | Bildirilen soğutma için enerji verimlilik oranı, belirli dış sıcaklıkta kısmi yük için$T_j$ | | | |
| $T_j$ = + 35°C | $P_{dc}$ | 11.6 | kW | $T_j$ =+35°C | $EER_d$ | 2.80 | - |
| $T_j$ = + 30°C | $P_{dc}$ | 8.7 | kW | $T_j$ = +30°C | $EER_d$ | 4.34 | - |
| $T_j$ = + 25°C | $P_{dc}$ | 5.8 | kW | $T_j$ = + 25°C | $EER_d$ | 6.02 | - |
| $T_j$ = + 20°C | $P_{dc}$ | 2.6 | kW | $T_j$ = + 20°C | $EER_d$ | 6.46 | - |
| Soğutucunun bozunma katsayısı (*) | $C_{dc}$ | 0.9 | kW | | | | |
| Aktif mod dışındaki modlarda güç tüketimi | | | | | | | |
| Kapalı mod | $P_{OFF}$ | 0.020 | kW | Krank kasa ısıtıcı modu | $P_{CK}$ | 0.000 | KW |
| Termostat kapalı modu | $P_{TO}$ | 0.010 | kW | Bekleme modu | $P_{SB}$ | 0.020 | KW |
| Diğer öğeler | | | | | | | |
| Kapasite kontrolü | değişken | | | **Hava-su konfor soğutucuları için; hava akış hızı, dış mekan ölçülmüştür.** | - | 5000 | $m^3/h$ |
| Ses güç seviyesi, iç/dış mekan | $L_{WA}$ | -/64 | dB | Su/tuzlu su ile çalışan soğutucular için; Nominal tuzlu su veya su akış hızı, dış mekan ısı değiştiricisi | - | N/A | $m^3/h$ |
| Azot oksit emisyonları (uygulanabilirse) | NOx(**) | - | Mg/kwh giriş GCV | | | | |
| Soğutucunun GWP değeri | - | 675 | Kg $CO_2$ eq (100yıllar) | | | | |
| Kullanılan standart değerlendirme koşulları | Düşük sıcaklık uygulaması | | | | | | |
| İletişim bilgileri | Kılavuzun arka kapağına bakınız | | | | | | |

(**) Eğer $C_{dC}$ ölçümle belirlenmemişse, soğutucuların varsayılan bozunma katsayısı 0.9 olacaktır.

(**) 26 Eylül 2018 tarihinden itibaren.

# Konfor soğutucular için bilgi gereksinimleri

| | |
|---|---|
| Model(s): | 12kW(ısınma 3kW);12kW |
| Soğutucunun dış tarafındaki ısı değiştirici | Hava-su |
| Soğutucunun iç tarafındaki ısı değiştirici | Su |
| Tür: | Kompresör tahrikli buhar sıkıştırma |
| Kompresör sürücüsü | Elektrik motoru |

| ÖĞE | Sembol | DEĞER | BİRİM | ÖĞE | Sembol | DEĞER | BİRİM |
|---|---|---|---|---|---|---|---|
| **Nominal ısı çıkışı (*)** | $P_{rated.c}$ | 12 | kW | **Mevsimlik mekan ısıtma enerji verimliliği** | $H_{s.c}$ | 295 | % |
| Bildirilen soğutma kapasitesi, belirli dış sıcaklıkta kısmi yük için $T_j$ | | | | Bildirilen soğutma için enerji verimlilik oranı, belirli dış sıcaklıkta kısmi yük için$T_j$ | | | |
| $T_j$ = + 35°C | $P_{dc}$ | 12.0 | kW | $T_j$ =+35°C | $EER_d$ | 3.96 | - |
| $T_j$ = + 30°C | $P_{dc}$ | 9.3 | kW | $T_j$ = +30°C | $EER_d$ | 6.16 | - |
| $T_j$ = + 25°C | $P_{dc}$ | 5.6 | kW | $T_j$ = + 25°C | $EER_d$ | 9.03 | - |
| $T_j$ = + 20°C | $P_{dc}$ | 3.5 | kW | $T_j$ = + 20°C | $EER_d$ | 10.04 | - |
| Soğutucunun bozunma katsayısı (*) | $C_{dc}$ | 0.9 | kW | | | | |
| Aktif mod dışındaki modlarda güç tüketimi | | | | | | | |
| Kapalı mod | $P_{OFF}$ | 0.020 | kW | Krank kasa ısıtıcı modu | $P_{CK}$ | 0.000 | KW |
| Termostat kapalı modu | $P_{TO}$ | 0.010 | kW | Bekleme modu | $P_{SB}$ | 0.020 | KW |
| Diğer öğeler | | | | | | | |
| Kapasite kontrolü | değişken | | | **Hava-su konfor soğutucuları için; hava akış hızı, dış mekan ölçülmüştür.** | - | 5000 | $m^3/h$ |
| Ses güç seviyesi, iç/dış mekan | $L_{WA}$ | -/64 | dB | Su/tuzlu su ile çalışan soğutucular için; Nominal tuzlu su veya su akış hızı, dış mekan ısı değiştiricisi | - | N/A | $m^3/h$ |
| Azot oksit emisyonları (uygulanabilirse) | NOx(**) | - | Mg/kwh giriş GCV | | | | |
| Soğutucunun GWP değeri | - | 675 | Kg $CO_2$ eq (100yıllar) | | | | |
| Kullanılan standart değerlendirme koşulları | Orta sıcaklık uygulaması | | | | | | |
| İletişim bilgileri | Kılavuzun arka kapağına bakınız | | | | | | |

(**) Eğer $C_{dC}$ ölçümle belirlenmemişse, soğutucuların varsayılan bozunma katsayısı 0.9 olacaktır.

(**) 26 Eylül 2018 tarihinden itibaren.

# Konfor soğutucular için bilgi gereksinimleri

| | |
|---|---|
| Model(s): | 14kW(ısınma 3kW);14kW |
| Soğutucunun dış tarafındaki ısı değiştirici | Hava-su |
| Soğutucunun iç tarafındaki ısı değiştirici | Su |
| Tür: | Kompresör tahrikli buhar sıkıştırma |
| Kompresör sürücüsü | Elektrik motoru |

| ÖĞE | Sembol | DEĞER | BİRİM | ÖĞE | Sembol | DEĞER | BİRİM |
|---|---|---|---|---|---|---|---|
| **Nominal ısı çıkışı (*)** | $P_{rated.c}$ | 13 | kW | **Mevsimlik mekan ısıtma enerji verimliliği** | $H_{s.c}$ | 200 | % |
| Bildirilen soğutma kapasitesi, belirli dış sıcaklıkta kısmi yük için $T_j$ | | | | Bildirilen soğutma için enerji verimlilik oranı, belirli dış sıcaklıkta kısmi yük için$T_j$ | | | |
| $T_j$ = + 35°C | $P_{dc}$ | 12.7 | kW | $T_j$ =+35°C | $EER_d$ | 2.59 | - |
| $T_j$ = + 30°C | $P_{dc}$ | 9.5 | kW | $T_j$ = +30°C | $EER_d$ | 4.33 | - |
| $T_j$ = + 25°C | $P_{dc}$ | 6.3 | kW | $T_j$ = + 25°C | $EER_d$ | 6.08 | - |
| $T_j$ = + 20°C | $P_{dc}$ | 3.0 | kW | $T_j$ = + 20°C | $EER_d$ | 6.64 | - |
| Soğutucunun bozunma katsayısı (*) | $C_{dc}$ | 0.9 | kW | | | | |
| Aktif mod dışındaki modlarda güç tüketimi | | | | | | | |
| Kapalı mod | $P_{OFF}$ | 0.020 | kW | Krank kasa ısıtıcı modu | $P_{CK}$ | 0.000 | KW |
| Termostat kapalı modu | $P_{TO}$ | 0.010 | kW | Bekleme modu | $P_{SB}$ | 0.020 | KW |
| Diğer öğeler | | | | | | | |
| Kapasite kontrolü | değişken | | | **Hava-su konfor soğutucuları için; hava akış hızı, dış mekan ölçülmüştür.** | - | 5500 | $m^3/h$ |
| Ses güç seviyesi, iç/dış mekan | $L_{WA}$ | -/66 | dB | Su/tuzlu su ile çalışan soğutucular için; Nominal tuzlu su veya su akış hızı, dış mekan ısı değiştiricisi | - | N/A | $m^3/h$ |
| Azot oksit emisyonları (uygulanabilirse) | NOx(**) | - | Mg/kwh giriş GCV | | | | |
| Soğutucunun GWP değeri | - | 675 | Kg $CO_2$ eq (100yıllar) | | | | |
| Kullanılan standart değerlendirme koşulları | Düşük sıcaklık uygulaması | | | | | | |
| İletişim bilgileri | Kılavuzun arka kapağına bakınız | | | | | | |

(**) Eğer $C_{dC}$ ölçümle belirlenmemişse, soğutucuların varsayılan bozunma katsayısı 0.9 olacaktır.

(**) 26 Eylül 2018 tarihinden itibaren.

# Konfor soğutucular için bilgi gereksinimleri

| | |
|---|---|
| Model(s): | 14kW(ısınma 3kW);14kW |
| Soğutucunun dış tarafındaki ısı değiştirici | Hava-su |
| Soğutucunun iç tarafındaki ısı değiştirici | Su |
| Tür: | Kompresör tahrikli buhar sıkıştırma |
| Kompresör sürücüsü | Elektrik motoru |

| ÖĞE | Sembol | DEĞER | BİRİM | ÖĞE | Sembol | DEĞER | BİRİM |
|---|---|---|---|---|---|---|---|
| **Nominal ısı çıkışı (*)** | $P_{rated.c}$ | 14 | kW | **Mevsimlik mekan ısıtma enerji verimliliği** | $H_{s.c}$ | 281 | % |
| Bildirilen soğutma kapasitesi, belirli dış sıcaklıkta kısmi yük için $T_j$ | | | | Bildirilen soğutma için enerji verimlilik oranı, belirli dış sıcaklıkta kısmi yük için$T_j$ | | | |
| $T_j$ = + 35°C | $P_{dc}$ | 13.6 | kW | $T_j$ =+35°C | $EER_d$ | 3.73 | - |
| $T_j$ = + 30°C | $P_{dc}$ | 10.4 | kW | $T_j$ = +30°C | $EER_d$ | 5.75 | - |
| $T_j$ = + 25°C | $P_{dc}$ | 6.6 | kW | $T_j$ = + 25°C | $EER_d$ | 8.58 | - |
| $T_j$ = + 20°C | $P_{dc}$ | 3.5 | kW | $T_j$ = + 20°C | $EER_d$ | 9.96 | - |
| Soğutucunun bozunma katsayısı (*) | $C_{dc}$ | 0.9 | kW | | | | |
| Aktif mod dışındaki modlarda güç tüketimi | | | | | | | |
| Kapalı mod | $P_{OFF}$ | 0.020 | kW | Krank kasa ısıtıcı modu | $P_{CK}$ | 0.000 | KW |
| Termostat kapalı modu | $P_{TO}$ | 0.010 | kW | Bekleme modu | $P_{SB}$ | 0.020 | KW |
| Diğer öğeler | | | | | | | |
| Kapasite kontrolü | değişken | | | **Hava-su konfor soğutucuları için; hava akış hızı, dış mekan ölçülmüştür.** | - | 5500 | $m^3/h$ |
| Ses güç seviyesi, iç/dış mekan | $L_{WA}$ | -/66 | dB | Su/tuzlu su ile çalışan soğutucular için; Nominal tuzlu su veya su akış hızı, dış mekan ısı değiştiricisi | - | N/A | $m^3/h$ |
| Azot oksit emisyonları (uygulanabilirse) | NOx(**) | - | Mg/kwh giriş GCV | | | | |
| Soğutucunun GWP değeri | - | 675 | Kg $CO_2$ eq (100yıllar) | | | | |
| Kullanılan standart değerlendirme koşulları | Orta sıcaklık uygulaması | | | | | | |
| İletişim bilgileri | Kılavuzun arka kapağına bakınız | | | | | | |

(**) Eğer $C_{dC}$ ölçümle belirlenmemişse, soğutucuların varsayılan bozunma katsayısı 0.9 olacaktır.

(**) 26 Eylül 2018 tarihinden itibaren.

# Konfor soğutucular için bilgi gereksinimleri

| | |
|---|---|
| Model(s): | 16kW(ısınma 3kW);16kW |
| Soğutucunun dış tarafındaki ısı değiştirici | Hava-su |
| Soğutucunun iç tarafındaki ısı değiştirici | Su |
| Tür: | Kompresör tahrikli buhar sıkıştırma |
| Kompresör sürücüsü | Elektrik motoru |

| ÖĞE | Sembol | DEĞER | BİRİM | ÖĞE | Sembol | DEĞER | BİRİM |
|---|---|---|---|---|---|---|---|
| **Nominal ısı çıkışı (*)** | $P_{rated.c}$ | 14 | kW | **Mevsimlik mekan ısıtma enerji verimliliği** | $H_{s.c}$ | 192 | % |
| Bildirilen soğutma kapasitesi, belirli dış sıcaklıkta kısmi yük için $T_j$ | | | | Bildirilen soğutma için enerji verimlilik oranı, belirli dış sıcaklıkta kısmi yük için$T_j$ | | | |
| $T_j$ = + 35°C | $P_{dc}$ | 14.3 | kW | $T_j$ =+35°C | $EER_d$ | 2.51 | - |
| $T_j$ = + 30°C | $P_{dc}$ | 10.6 | kW | $T_j$ = +30°C | $EER_d$ | 3.70 | - |
| $T_j$ = + 25°C | $P_{dc}$ | 6.8 | kW | $T_j$ = + 25°C | $EER_d$ | 5.87 | - |
| $T_j$ = + 20°C | $P_{dc}$ | 3.5 | kW | $T_j$ = + 20°C | $EER_d$ | 7.23 | - |
| Soğutucunun bozunma katsayısı (*) | $C_{dc}$ | 0.9 | kW | | | | |
| Aktif mod dışındaki modlarda güç tüketimi | | | | | | | |
| Kapalı mod | $P_{OFF}$ | 0.020 | kW | Krank kasa ısıtıcı modu | $P_{CK}$ | 0.000 | KW |
| Termostat kapalı modu | $P_{TO}$ | 0.010 | kW | Bekleme modu | $P_{SB}$ | 0.020 | KW |
| Diğer öğeler | | | | | | | |
| Kapasite kontrolü | değişken | | | **Hava-su konfor soğutucuları için; hava akış hızı, dış mekan ölçülmüştür.** | - | 6000 | $m^3/h$ |
| Ses güç seviyesi, iç/dış mekan | $L_{WA}$ | -/68 | dB | Su/tuzlu su ile çalışan soğutucular için; Nominal tuzlu su veya su akış hızı, dış mekan ısı değiştiricisi | - | N/A | $m^3/h$ |
| Azot oksit emisyonları (uygulanabilirse) | NOx(**) | - | Mg/kwh giriş GCV | | | | |
| Soğutucunun GWP değeri | - | 675 | Kg $CO_2$ eq (100yıllar) | | | | |
| Kullanılan standart değerlendirme koşulları | Düşük sıcaklık uygulaması | | | | | | |
| İletişim bilgileri | Kılavuzun arka kapağına bakınız | | | | | | |

(**) Eğer $C_{dC}$ ölçümle belirlenmemişse, soğutucuların varsayılan bozunma katsayısı 0.9 olacaktır.

(**) 26 Eylül 2018 tarihinden itibaren.

# Konfor soğutucular için bilgi gereksinimleri

| | |
|---|---|
| Model(s): | 16kW(ısınma 3kW);16kW |
| Soğutucunun dış tarafındaki ısı değiştirici | Hava-su |
| Soğutucunun iç tarafındaki ısı değiştirici | Su |
| Tür: | Kompresör tahrikli buhar sıkıştırma |
| Kompresör sürücüsü | Elektrik motoru |

| ÖĞE | Sembol | DEĞER | BİRİM | ÖĞE | Sembol | DEĞER | BİRİM |
|---|---|---|---|---|---|---|---|
| **Nominal ısı çıkışı (*)** | $P_{rated.c}$ | 15 | kW | **Mevsimlik mekan ısıtma enerji verimliliği** | $H_{s.c}$ | 280 | % |
| Bildirilen soğutma kapasitesi, belirli dış sıcaklıkta kısmi yük için $T_j$ | | | | Bildirilen soğutma için enerji verimlilik oranı, belirli dış sıcaklıkta kısmi yük için$T_j$ | | | |
| $T_j$ = + 35°C | $P_{dc}$ | 15.4 | kW | $T_j$ =+35°C | $EER_d$ | 3.50 | - |
| $T_j$ = + 30°C | $P_{dc}$ | 11.6 | kW | $T_j$ = +30°C | $EER_d$ | 5.45 | - |
| $T_j$ = + 25°C | $P_{dc}$ | 7.3 | kW | $T_j$ = + 25°C | $EER_d$ | 8.35 | - |
| $T_j$ = + 20°C | $P_{dc}$ | 4.6 | kW | $T_j$ = + 20°C | $EER_d$ | 11.68 | - |
| Soğutucunun bozunma katsayısı (*) | $C_{dc}$ | 0.9 | kW | | | | |
| Aktif mod dışındaki modlarda güç tüketimi | | | | | | | |
| Kapalı mod | $P_{OFF}$ | 0.020 | kW | Krank kasa ısıtıcı modu | $P_{CK}$ | 0.000 | KW |
| Termostat kapalı modu | $P_{TO}$ | 0.010 | kW | Bekleme modu | $P_{SB}$ | 0.020 | KW |
| Diğer öğeler | | | | | | | |
| Kapasite kontrolü | değişken | | | **Hava-su konfor soğutucuları için; hava akış hızı, dış mekan ölçülmüştür.** | - | 6000 | $m^3/h$ |
| Ses güç seviyesi, iç/dış mekan | $L_{WA}$ | -/68 | dB | Su/tuzlu su ile çalışan soğutucular için; Nominal tuzlu su veya su akış hızı, dış mekan ısı değiştiricisi | - | N/A | $m^3/h$ |
| Azot oksit emisyonları (uygulanabilirse) | NOx(**) | - | Mg/kwh giriş GCV | | | | |
| Soğutucunun GWP değeri | - | 675 | Kg $CO_2$ eq (100yıllar) | | | | |
| Kullanılan standart değerlendirme koşulları | Orta sıcaklık uygulaması | | | | | | |
| İletişim bilgileri | Kılavuzun arka kapağına bakınız | | | | | | |

(**) Eğer $C_{dC}$ ölçümle belirlenmemişse, soğutucuların varsayılan bozunma katsayısı 0.9 olacaktır.

(**) 26 Eylül 2018 tarihinden itibaren.

# Konfor soğutucular için bilgi gereksinimleri

| | |
|---|---|
| Model(s): | 3-PH 12kW(ısınma 9kW);3-PH 12kW(ısınma 6kW);<br>3-PH 12kW(ısınma 3kW);3-PH 12kW |
| Soğutucunun dış tarafındaki ısı değiştirici | Hava-su |
| Soğutucunun iç tarafındaki ısı değiştirici | Su |
| Tür: | Kompresör tahrikli buhar sıkıştırma |
| Kompresör sürücüsü | Elektrik motoru |

| ÖĞE | Sembol | DEĞER | BİRİM | ÖĞE | Sembol | DEĞER | BİRİM |
|---|---|---|---|---|---|---|---|
| **Nominal ısı çıkışı (*)** | $P_{rated.c}$ | 12 | kW | **Mevsimlik mekan ısıtma enerji verimliliği** | $H_{s.c}$ | 197 | % |
| Bildirilen soğutma kapasitesi, belirli dış sıcaklıkta kısmi yük için $T_j$ | | | | Bildirilen soğutma için enerji verimlilik oranı, belirli dış sıcaklıkta kısmi yük için$T_j$ | | | |
| $T_j$ = + 35°C | $P_{dc}$ | 11.7 | kW | $T_j$ =+35°C | $EER_d$ | 2.64 | - |
| $T_j$ = + 30°C | $P_{dc}$ | 8.8 | kW | $T_j$ = +30°C | $EER_d$ | 4.09 | - |
| $T_j$ = + 25°C | $P_{dc}$ | 5.9 | kW | $T_j$ = + 25°C | $EER_d$ | 5.58 | - |
| $T_j$ = + 20°C | $P_{dc}$ | 4.1 | kW | $T_j$ = + 20°C | $EER_d$ | 8.01 | - |
| Soğutucunun bozunma katsayısı (*) | $C_{dc}$ | 0.9 | kW | | | | |
| Aktif mod dışındaki modlarda güç tüketimi | | | | | | | |
| Kapalı mod | $P_{OFF}$ | 0.014 | kW | Krank kasa ısıtıcı modu | $P_{CK}$ | 0.000 | KW |
| Termostat kapalı modu | $P_{TO}$ | 0.024 | kW | Bekleme modu | $P_{SB}$ | 0.014 | KW |
| Diğer öğeler | | | | | | | |
| Kapasite kontrolü | değişken | | | **Hava-su konfor soğutucuları için; hava akış hızı, dış mekan ölçülmüştür.** | - | 5000 | $m^3/h$ |
| Ses güç seviyesi, iç/dış mekan | $L_{WA}$ | -/64 | dB | Su/tuzlu su ile çalışan soğutucular için; Nominal tuzlu su veya su akış hızı, dış mekan ısı değiştiricisi | - | N/A | $m^3/h$ |
| Azot oksit emisyonları (uygulanabilirse) | NOx(**) | - | Mg/kwh giriş GCV | | | | |
| Soğutucunun GWP değeri | - | 675 | Kg $CO_2$ eq (100yıllar) | | | | |
| Kullanılan standart değerlendirme koşulları | Düşük sıcaklık uygulaması | | | | | | |
| İletişim bilgileri | Kılavuzun arka kapağına bakınız | | | | | | |

(**) Eğer $C_{dC}$ ölçümle belirlenmemişse, soğutucuların varsayılan bozunma katsayısı 0.9 olacaktır.

(**) 26 Eylül 2018 tarihinden itibaren.

# Konfor soğutucular için bilgi gereksinimleri

| | |
|---|---|
| Model(s): | 3-PH 12kW(ısınma 9kW);3-PH 12kW(ısınma 6kW);<br>3-PH 12kW(ısınma 3kW);3-PH 12kW |
| Soğutucunun dış tarafındaki ısı değiştirici | Hava-su |
| Soğutucunun iç tarafındaki ısı değiştirici | Su |
| Tür: | Kompresör tahrikli buhar sıkıştırma |
| Kompresör sürücüsü | Elektrik motoru |

| ÖĞE | Sembol | DEĞER | BİRİM | ÖĞE | Sembol | DEĞER | BİRİM |
|---|---|---|---|---|---|---|---|
| **Nominal ısı çıkışı (*)** | $P_{rated.c}$ | 12 | kW | **Mevsimlik mekan ısıtma enerji verimliliği** | $H_{s.c}$ | 276 | % |
| Bildirilen soğutma kapasitesi, belirli dış sıcaklıkta kısmi yük için $T_j$ | | | | Bildirilen soğutma için enerji verimlilik oranı, belirli dış sıcaklıkta kısmi yük için$T_j$ | | | |
| $T_j$ = + 35°C | $P_{dc}$ | 12.0 | kW | $T_j$ =+35°C | $EER_d$ | 3.91 | - |
| $T_j$ = + 30°C | $P_{dc}$ | 9.3 | kW | $T_j$ = +30°C | $EER_d$ | 5.67 | - |
| $T_j$ = + 25°C | $P_{dc}$ | 5.7 | kW | $T_j$ = + 25°C | $EER_d$ | 7.98 | - |
| $T_j$ = + 20°C | $P_{dc}$ | 5.1 | kW | $T_j$ = + 20°C | $EER_d$ | 11.37 | - |
| Soğutucunun bozunma katsayısı (*) | $C_{dc}$ | 0.9 | kW | | | | |
| Aktif mod dışındaki modlarda güç tüketimi | | | | | | | |
| Kapalı mod | $P_{OFF}$ | 0.014 | kW | Krank kasa ısıtıcı modu | $P_{CK}$ | 0.000 | KW |
| Termostat kapalı modu | $P_{TO}$ | 0.024 | kW | Bekleme modu | $P_{SB}$ | 0.014 | KW |
| Diğer öğeler | | | | | | | |
| Kapasite kontrolü | değişken | | | **Hava-su konfor soğutucuları için; hava akış hızı, dış mekan ölçülmüştür.** | - | 5000 | $m^3/h$ |
| Ses güç seviyesi, iç/dış mekan | $L_{WA}$ | -/64 | dB | Su/tuzlu su ile çalışan soğutucular için; Nominal tuzlu su veya su akış hızı, dış mekan ısı değiştiricisi | - | N/A | $m^3/h$ |
| Azot oksit emisyonları (uygulanabilirse) | NOx(**) | - | Mg/kwh giriş GCV | | | | |
| Soğutucunun GWP değeri | - | 675 | Kg $CO_2$ eq (100yıllar) | | | | |
| Kullanılan standart değerlendirme koşulları | Orta sıcaklık uygulaması | | | | | | |
| İletişim bilgileri | Kılavuzun arka kapağına bakınız | | | | | | |

(**) Eğer $C_{dC}$ ölçümle belirlenmemişse, soğutucuların varsayılan bozunma katsayısı 0.9 olacaktır.

(**) 26 Eylül 2018 tarihinden itibaren.

# Konfor soğutucular için bilgi gereksinimleri

| | |
|---|---|
| Model(s): | 3-PH 14kW(ısınma 9kW);3-PH 14kW(ısınma 6kW);<br>3-PH 14kW(ısınma 3kW);3-PH 14kW |
| Soğutucunun dış tarafındaki ısı değiştirici | Hava-su |
| Soğutucunun iç tarafındaki ısı değiştirici | Su |
| Tür: | Kompresör tahrikli buhar sıkıştırma |
| Kompresör sürücüsü | Elektrik motoru |

| ÖĞE | Sembol | DEĞER | BİRİM | ÖĞE | Sembol | DEĞER | BİRİM |
|---|---|---|---|---|---|---|---|
| **Nominal ısı çıkışı (*)** | $P_{rated.c}$ | 13 | kW | **Mevsimlik mekan ısıtma enerji verimliliği** | $H_{s.c}$ | 188 | % |
| Bildirilen soğutma kapasitesi, belirli dış sıcaklıkta kısmi yük için $T_j$ | | | | Bildirilen soğutma için enerji verimlilik oranı, belirli dış sıcaklıkta kısmi yük için$T_j$ | | | |
| $T_j$ = + 35°C | $P_{dc}$ | 12.7 | kW | $T_j$ =+35°C | $EER_d$ | 2.36 | - |
| $T_j$ = + 30°C | $P_{dc}$ | 9.5 | kW | $T_j$ = +30°C | $EER_d$ | 4.07 | - |
| $T_j$ = + 25°C | $P_{dc}$ | 6.1 | kW | $T_j$ = + 25°C | $EER_d$ | 5.76 | - |
| $T_j$ = + 20°C | $P_{dc}$ | 2.8 | kW | $T_j$ = + 20°C | $EER_d$ | 6.05 | - |
| Soğutucunun bozunma katsayısı (*) | $C_{dc}$ | 0.9 | kW | | | | |
| Aktif mod dışındaki modlarda güç tüketimi | | | | | | | |
| Kapalı mod | $P_{OFF}$ | 0.014 | kW | Krank kasa ısıtıcı modu | $P_{CK}$ | 0.000 | KW |
| Termostat kapalı modu | $P_{TO}$ | 0.024 | kW | Bekleme modu | $P_{SB}$ | 0.014 | KW |
| Diğer öğeler | | | | | | | |
| Kapasite kontrolü | değişken | | | **Hava-su konfor soğutucuları için; hava akış hızı, dış mekan ölçülmüştür.** | - | 5000 | $m^3/h$ |
| Ses güç seviyesi, iç/dış mekan | $L_{WA}$ | -/66 | dB | Su/tuzlu su ile çalışan soğutucular için; Nominal tuzlu su veya su akış hızı, dış mekan ısı değiştiricisi | - | N/A | $m^3/h$ |
| Azot oksit emisyonları (uygulanabilirse) | NOx(**) | - | Mg/kwh giriş GCV | | | | |
| Soğutucunun GWP değeri | - | 675 | Kg $CO_2$ eq (100yıllar) | | | | |
| Kullanılan standart değerlendirme koşulları | Düşük sıcaklık uygulaması | | | | | | |
| İletişim bilgileri | Kılavuzun arka kapağına bakınız | | | | | | |

(**) Eğer $C_{dC}$ ölçümle belirlenmemişse, soğutucuların varsayılan bozunma katsayısı 0.9 olacaktır.

(**) 26 Eylül 2018 tarihinden itibaren.

# Konfor soğutucular için bilgi gereksinimleri

| | |
|---|---|
| Model(s): | 3-PH 14kW(ısınma 9kW);3-PH 14kW(ısınma 6kW);<br>3-PH 14kW(ısınma 3kW);3-PH 14kW |
| Soğutucunun dış tarafındaki ısı değiştirici | Hava-su |
| Soğutucunun iç tarafındaki ısı değiştirici | Su |
| Tür: | Kompresör tahrikli buhar sıkıştırma |
| Kompresör sürücüsü | Elektrik motoru |

| ÖĞE | Sembol | DEĞER | BİRİM | ÖĞE | Sembol | DEĞER | BİRİM |
|---|---|---|---|---|---|---|---|
| **Nominal ısı çıkışı (*)** | $P_{rated.c}$ | 14 | kW | **Mevsimlik mekan ısıtma enerji verimliliği** | $H_{s.c}$ | 269 | % |
| Bildirilen soğutma kapasitesi, belirli dış sıcaklıkta kısmi yük için $T_j$ | | | | Bildirilen soğutma için enerji verimlilik oranı, belirli dış sıcaklıkta kısmi yük için$T_j$ | | | |
| $T_j$ = + 35°C | $P_{dc}$ | 13.5 | kW | $T_j$ =+35°C | $EER_d$ | 3.72 | - |
| $T_j$ = + 30°C | $P_{dc}$ | 10.3 | kW | $T_j$ = +30°C | $EER_d$ | 5.51 | - |
| $T_j$ = + 25°C | $P_{dc}$ | 6.5 | kW | $T_j$ = + 25°C | $EER_d$ | 8.11 | - |
| $T_j$ = + 20°C | $P_{dc}$ | 3.4 | kW | $T_j$ = + 20°C | $EER_d$ | 9.49 | - |
| Soğutucunun bozunma katsayısı (*) | $C_{dc}$ | 0.9 | kW | | | | |
| Aktif mod dışındaki modlarda güç tüketimi | | | | | | | |
| Kapalı mod | $P_{OFF}$ | 0.014 | kW | Krank kasa ısıtıcı modu | $P_{CK}$ | 0.000 | KW |
| Termostat kapalı modu | $P_{TO}$ | 0.024 | kW | Bekleme modu | $P_{SB}$ | 0.014 | KW |
| Diğer öğeler | | | | | | | |
| Kapasite kontrolü | değişken | | | **Hava-su konfor soğutucuları için; hava akış hızı, dış mekan ölçülmüştür.** | - | 5500 | $m^3/h$ |
| Ses güç seviyesi, iç/dış mekan | $L_{WA}$ | -/66 | dB | Su/tuzlu su ile çalışan soğutucular için; Nominal tuzlu su veya su akış hızı, dış mekan ısı değiştiricisi | - | N/A | $m^3/h$ |
| Azot oksit emisyonları (uygulanabilirse) | NOx(**) | - | Mg/kwh giriş GCV | | | | |
| Soğutucunun GWP değeri | - | 675 | Kg $CO_2$ eq (100yıllar) | | | | |
| Kullanılan standart değerlendirme koşulları | Orta sıcaklık uygulaması | | | | | | |
| İletişim bilgileri | Kılavuzun arka kapağına bakınız | | | | | | |

(**) Eğer $C_{dC}$ ölçümle belirlenmemişse, soğutucuların varsayılan bozunma katsayısı 0.9 olacaktır.

(**) 26 Eylül 2018 tarihinden itibaren.

# Konfor soğutucular için bilgi gereksinimleri

| | |
|---|---|
| Model(s): | 3-PH 16kW(ısınma 9kW);3-PH 16kW(ısınma 6kW);<br>3-PH 16kW(ısınma 3kW);3-PH 16kW |
| Soğutucunun dış tarafındaki ısı değiştirici | Hava-su |
| Soğutucunun iç tarafındaki ısı değiştirici | Su |
| Tür: | Kompresör tahrikli buhar sıkıştırma |
| Kompresör sürücüsü | Elektrik motoru |

| ÖĞE | Sembol | DEĞER | BİRİM | ÖĞE | Sembol | DEĞER | BİRİM |
|---|---|---|---|---|---|---|---|
| **Nominal ısı çıkışı (*)** | $P_{rated.c}$ | 14 | kW | **Mevsimlik mekan ısıtma enerji verimliliği** | $H_{s.c}$ | 186 | % |
| Bildirilen soğutma kapasitesi, belirli dış sıcaklıkta kısmi yük için $T_j$ | | | | Bildirilen soğutma için enerji verimlilik oranı, belirli dış sıcaklıkta kısmi yük için$T_j$ | | | |
| $T_j$ = + 35°C | $P_{dc}$ | 13.8 | kW | $T_j$ =+35°C | $EER_d$ | 2.41 | - |
| $T_j$ = + 30°C | $P_{dc}$ | 10.9 | kW | $T_j$ = +30°C | $EER_d$ | 3.65 | - |
| $T_j$ = + 25°C | $P_{dc}$ | 6.9 | kW | $T_j$ = + 25°C | $EER_d$ | 5.60 | - |
| $T_j$ = + 20°C | $P_{dc}$ | 3.6 | kW | $T_j$ = + 20°C | $EER_d$ | 7.08 | - |
| Soğutucunun bozunma katsayısı (*) | $C_{dc}$ | 0.9 | kW | | | | |
| Aktif mod dışındaki modlarda güç tüketimi | | | | | | | |
| Kapalı mod | $P_{OFF}$ | 0.014 | kW | Krank kasa ısıtıcı modu | $P_{CK}$ | 0.000 | KW |
| Termostat kapalı modu | $P_{TO}$ | 0.024 | kW | Bekleme modu | $P_{SB}$ | 0.014 | KW |
| Diğer öğeler | | | | | | | |
| Kapasite kontrolü | değişken | | | **Hava-su konfor soğutucuları için; hava akış hızı, dış mekan ölçülmüştür.** | - | 6000 | $m^3/h$ |
| Ses güç seviyesi, iç/dış mekan | $L_{WA}$ | -/68 | dB | Su/tuzlu su ile çalışan soğutucular için; Nominal tuzlu su veya su akış hızı, dış mekan ısı değiştiricisi | - | N/A | $m^3/h$ |
| Azot oksit emisyonları (uygulanabilirse) | NOx(**) | - | Mg/kwh giriş GCV | | | | |
| Soğutucunun GWP değeri | - | 675 | Kg $CO_2$ eq (100yıllar) | | | | |
| Kullanılan standart değerlendirme koşulları | Düşük sıcaklık uygulaması | | | | | | |
| İletişim bilgileri | Kılavuzun arka kapağına bakınız | | | | | | |

(**) Eğer $C_{dC}$ ölçümle belirlenmemişse, soğutucuların varsayılan bozunma katsayısı 0.9 olacaktır.

(**) 26 Eylül 2018 tarihinden itibaren.

# Konfor soğutucular için bilgi gereksinimleri

| | |
|---|---|
| Model(s): | 3-PH 16kW(ısınma 9kW);3-PH 16kW(ısınma 6kW);<br>3-PH 16kW(ısınma 3kW);3-PH 16kW |
| Soğutucunun dış tarafındaki ısı değiştirici | Hava-su |
| Soğutucunun iç tarafındaki ısı değiştirici | Su |
| Tür: | Kompresör tahrikli buhar sıkıştırma |
| Kompresör sürücüsü | Elektrik motoru |

| ÖĞE | Sembol | DEĞER | BİRİM | ÖĞE | Sembol | DEĞER | BİRİM |
|---|---|---|---|---|---|---|---|
| **Nominal ısı çıkışı (*)** | $P_{rated.c}$ | 16 | kW | **Mevsimlik mekan ısıtma enerji verimliliği** | $H_{s.c}$ | 263 | % |
| Bildirilen soğutma kapasitesi, belirli dış sıcaklıkta kısmi yük için $T_j$ | | | | Bildirilen soğutma için enerji verimlilik oranı, belirli dış sıcaklıkta kısmi yük için$T_j$ | | | |
| $T_j$ = + 35°C | $P_{dc}$ | 15.5 | kW | $T_j$ =+35°C | $EER_d$ | 3.35 | - |
| $T_j$ = + 30°C | $P_{dc}$ | 11.6 | kW | $T_j$ = +30°C | $EER_d$ | 4.90 | - |
| $T_j$ = + 25°C | $P_{dc}$ | 7.5 | kW | $T_j$ = + 25°C | $EER_d$ | 7.91 | - |
| $T_j$ = + 20°C | $P_{dc}$ | 5.1 | kW | $T_j$ = + 20°C | $EER_d$ | 11.29 | - |
| Soğutucunun bozunma katsayısı (*) | $C_{dc}$ | 0.9 | kW | | | | |
| Aktif mod dışındaki modlarda güç tüketimi | | | | | | | |
| Kapalı mod | $P_{OFF}$ | 0.014 | kW | Krank kasa ısıtıcı modu | $P_{CK}$ | 0.000 | KW |
| Termostat kapalı modu | $P_{TO}$ | 0.024 | kW | Bekleme modu | $P_{SB}$ | 0.014 | KW |
| Diğer öğeler | | | | | | | |
| Kapasite kontrolü | değişken | | | **Hava-su konfor soğutucuları için; hava akış hızı, dış mekan ölçülmüştür.** | - | 6000 | $m^3/h$ |
| Ses güç seviyesi, iç/dış mekan | $L_{WA}$ | -/68 | dB | Su/tuzlu su ile çalışan soğutucular için; Nominal tuzlu su veya su akış hızı, dış mekan ısı değiştiricisi | - | N/A | $m^3/h$ |
| Azot oksit emisyonları (uygulanabilirse) | NOx(**) | - | Mg/kwh giriş GCV | | | | |
| Soğutucunun GWP değeri | - | 675 | Kg $CO_2$ eq (100yıllar) | | | | |
| Kullanılan standart değerlendirme koşulları | Orta sıcaklık uygulaması | | | | | | |
| İletişim bilgileri | Kılavuzun arka kapağına bakınız | | | | | | |

(**) Eğer $C_{dC}$ ölçümle belirlenmemişse, soğutucuların varsayılan bozunma katsayısı 0.9 olacaktır.

(**) 26 Eylül 2018 tarihinden itibaren.

TCL

Ananda GmbH

Daimlerstr. 6

D-76185 Karlsruhe

Mail:info@ananda-trading.de

85008-008578

# 空气源热泵整体式三联供
# 技术参数手册
# （共82页，含2页空白页）

技术要求:
1.纸张边角应裁剪整齐; 印刷字迹清晰整洁、内容正确，
没有明显的拖墨和重影缺陷;
2.封面、封底为128g铜版纸彩色印刷;封面中“TCL”商标颜色为PANTONE 186C;
3.内页材质为80g书写纸; 字体颜色为黑色K100;
4.未注公差按GB/T 1804C级;
5.版面尺寸为A4;
6.字体颜色为黑色K100;
7.装订:骑马钉装订;
8.批量生产及换版必须送样确认后再生产;
9.封底右下角中“XX-XXXXXXXXXX（X.0）”中“XX”代表供应商简称，
“XXXXXXXXXX”代表物料编码，“（X.0）”代表版本号”，第一次
为A版本，版本号以此向后推。

| | | | | | | | | | | | |
|---|---|---|---|---|---|---|---|---|---|---|---|
| C | GG.2310-1594 | | | 王佳文 | 2023.11.01 | 4-16kW | | 85008-008578 | | | |
| B | GG.2307-0156 | | | 杜泽锋 | 2023.07.07 | | | | | | |
| A | GG.2306-0162 | | | 杜泽锋 | 2023.06.12 | 技术参数手册 | | 阶段标记 | | 质 量 | 比 例 |
| 版次 | 更改文件号 | | | 签字 | | | | | | | |
| 设计 | 袁文昭 | 2023.05.19 | 工 艺 | 陈国权 | | 128g铜版纸+80g书写纸 | | | | | 1:1 |
| 校对 | 杜泽锋 | | 标准化 | 代音萍 | | | | 广东TCL智能暖通设备有限公司 | | | |
| 审核 | 罗镇雄 | | 批 准 | 梁勇超 | | 第 1 张 | 共 82 张 | | | | |

TCL

# TECHNICAL DATA MANUAL

## Air to Water Heat Pump System Tri-Thermal Monobloc

4kW
4kW(heating 3kW)
6kW
6kW(heating 3kW)
8kW
8kW(heating 3kW)
10kW
10kW(heating 3kW)
12kW
12kW(heating 3kW)
14kW
14kW(heating 3kW)
16kW
16kW(heating 3kW)

THML-4D/HBp-A
THMLd-4D/3HBp-A
THML-6D/HBp-A
THMLd-6D/3HBp-A
THML-8D/HBp-A
THMLd-8D/3HBp-A
THML-10D/HBp-A
THMLd-10D/3HBp-A
THML-12D/HBp-A
THMLd-12D/3HBp-A
THML-14D/HBp-A
THMLd-14D/3HBp-A
THML-16D/HBp-A
THMLd-16D/3HBp-A

3-PH 12kW
3-PH 12kW(heating 3kW)
3-PH 12kW(heating 6kW)
3-PH 12kW(heating 9kW)
3-PH 14kW
3-PH 14kW(heating 3kW)
3-PH 14kW(heating 6kW)
3-PH 14kW(heating 9kW)
3-PH 16kW
3-PH 16kW(heating 3kW)
3-PH 16kW(heating 6kW)
3-PH 16kW(heating 9kW)

THML-12S/HBp-A
THMLd-12S/3HBp-A
THMLd-12S/6HBp-A
THMLd-12S/9HBp-A
THML-14S/HBp-A
THMLd-14S/3HBp-A
THMLd-14S/6HBp-A
THMLd-14S/9HBp-A
THML-16S/HBp-A
THMLd-16S/3HBp-A
THMLd-16S/6HBp-A
THMLd-16S/9HBp-A

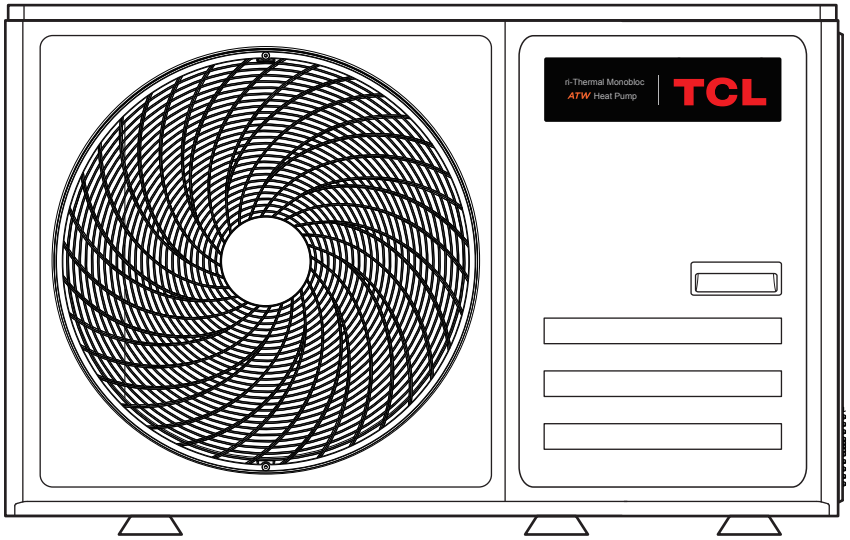


IMPORTANT NOTE:
Thank you very much for purchasing our product.
Before using your unit, please read this manual carefully and keep it for future reference.

## Technical parameters

| | |
|---|---|
| Model(s): | 4kW(heating 3kW);4kW |
| Air-to-water heat pump | yes |
| Water-to-water heat pump | no |
| Brine-to-water heat pump | no |
| Low-temperature heat pump | no |
| Equipped with a supplementary heater | yes(for 4kW(heating 3kW))<br>no(for 4kW) |
| Heat pump combination heater | no |
| Declared climate condition: | average |
| Parameters are declared for low-temperature application. | |

| Item | Symbol | Value | Unit | Item | Symbol | Value | Unit |
|---|---|---|---|---|---|---|---|
| **Rated heat output (*)** | Prated | 5.7 | kW | **Seasonal space heating energy efficiency** | $\eta_s$ | 182 | % |
| Declared capacity for heating for part load at indoor temperature 20 °C and outdoor temperature Tj | | | | Declared coefficient of performance or primary energy ratio for part load at indoor temperature 20 °C and outdoor temperature Tj | | | |
| $T_j$ = – 7°C | Prated | 5.1 | kW | $T_j$ = – 7°C | COPd | 2.82 | - |
| $T_j$ = + 2°C | Pdh | 3.1 | kW | $T_j$ = + 2°C | COPd | 4.37 | - |
| $T_j$ = + 7°C | Pdh | 2.1 | kW | $T_j$ = + 7°C | COPd | 6.57 | - |
| $T_j$ = + 12°C | Pdh | 1.7 | kW | $T_j$ = + 12°C | COPd | 8.83 | - |
| $T_j$ = bivalent temperature | Pdh | 5.1 | kW | $T_j$ = bivalent temperature | COPd | 2.82 | - |
| $T_j$ = operation limit temperature | Pdh | 4.6 | kW | $T_j$ = operation limit temperature | COPd | 2.60 | - |
| For air-to-water heat pumps: $T_j$ = – 15°C (if TOL < – 20°C) | Pdh | N/A | kW | For air-to-water heat pumps: $T_j$ = – 15°C (if TOL < – 20°C) | COPd | N/A | - |
| Bivalent temperature | $T_{biv}$ | -7 | °C | For air-to-water heat pumps: Operation limit temperature | TOL | -10 | °C |
| Cycling interval capacity for heating | $P_{cych}$ | N/A | kW | Cycling interval efficiency | $COP_{cyc}$ | N/A | - |
| Degradation co-efficient (**) | Cdh | 0.9 | - | Heating water operating limit temperature | WTOL | 65 | °C |
| Power consumption in modes other than active mode | | | | Supplementary heater | | | |
| Off mode | $P_{OFF}$ | 0.010 | kW | Rated heat output (**) | $P_{sup}$ | 1.1 | kW |
| Thermostat-off mode | $P_{TO}$ | 0.010 | kW | Type of energy input | Electric | | |
| Standby mode | $P_{SB}$ | 0.010 | kW | | | | |
| Crankcase heater mode | $P_{CK}$ | 0.000 | kW | | | | |

| **Other items** | | | | | | | |
|---|---|---|---|---|---|---|---|
| Capacity control | variable | | | For air-to-water heat pumps: Rated air flow rate, outdoors | - | 2600 | $m^3/h$ |
| Sound power level, indoors/ outdoors | $L_{WA}$ | -/56 | dB | For water- or brine-to-water heat pumps: Rated brine or water flow rate, outdoor heat exchanger | - | N/A | $m^3/h$ |
| Annual energy consumption | $Q_{HE}$ | 2559 | kWh | | | | |
| For heat pump combination heater: | | | | | | | |
| **Declared load profile** | N/A | | | **Water heating energy efficiency** | $\eta_{wh}$ | N/A | % |
| Daily electricity consumption | $Q_{elec}$ | N/A | kWh | Daily fuel consumption | $Q_{fuel}$ | N/A | kWh |
| Annual electricity consumption | AEC | N/A | kWh | Annual fuel consumption | AFC | N/A | GJ |
| Contact details | See the back cover of the manual | | | | | | |

(*) For heat pump space heaters and heat pump combination heaters, the rated heat output Prated is equal to the design load for heating Pdesignh, and the rated heat output of a supplementary heater Psup is equal to the supplementary capacity for heating sup(Tj).
(**) If Cdh is not determined by measurement then the default degradation coefficient is Cdh = 0.9.

## Technical parameters

| | |
|---|---|
| Model(s): | 4kW(heating 3kW);4kW |
| Air-to-water heat pump | yes |
| Water-to-water heat pump | no |
| Brine-to-water heat pump | no |
| Low-temperature heat pump | no |
| Equipped with a supplementary heater | yes(for 4kW(heating 3kW))<br>no(for 4kW) |
| Heat pump combination heater | no |
| Declared climate condition: | warmer |
| Parameters are declared for low-temperature application. | |

| Item | Symbol | Value | Unit | Item | Symbol | Value | Unit |
|---|---|---|---|---|---|---|---|
| **Rated heat output (*)** | Prated | 5.3 | kW | **Seasonal space heating energy efficiency** | $\eta_s$ | 264 | % |
| Declared capacity for heating for part load at indoor temperature 20 °C and outdoor temperature Tj | | | | Declared coefficient of performance or primary energy ratio for part load at indoor temperature 20 °C and outdoor temperature Tj | | | |
| $T_j$ = – 7°C | Prated | N/A | kW | $T_j$ = – 7°C | COPd | N/A | - |
| $T_j$ = + 2°C | Pdh | 5.3 | kW | $T_j$ = + 2°C | COPd | 3.39 | - |
| $T_j$ = + 7°C | Pdh | 3.4 | kW | $T_j$ = + 7°C | COPd | 5.81 | - |
| $T_j$ = + 12°C | Pdh | 1.7 | kW | $T_j$ = + 12°C | COPd | 8.62 | - |
| $T_j$ = bivalent temperature | Pdh | 3.4 | kW | $T_j$ = bivalent temperature | COPd | 5.81 | - |
| $T_j$ = operation limit temperature | Pdh | 5.3 | kW | $T_j$ = operation limit temperature | COPd | 3.39 | - |
| For air-to-water heat pumps: $T_j$ = – 15°C (if TOL < – 20°C) | Pdh | N/A | kW | For air-to-water heat pumps: $T_j$ = – 15°C (if TOL < – 20°C) | COPd | N/A | - |
| Bivalent temperature | $T_{biv}$ | 7 | °C | For air-to-water heat pumps: Operation limit temperature | TOL | 2 | °C |
| Cycling interval capacity for heating | $P_{cych}$ | N/A | kW | Cycling interval efficiency | $COP_{cyc}$ | N/A | - |
| Degradation co-efficient (**) | Cdh | 0.9 | - | Heating water operating limit temperature | WTOL | 65 | °C |
| Power consumption in modes other than active mode | | | | Supplementary heater | | | |
| Off mode | $P_{OFF}$ | 0.010 | kW | Rated heat output (**) | $P_{sup}$ | 0.0 | kW |
| Thermostat-off mode | $P_{TO}$ | 0.010 | kW | Type of energy input | Electric | | |
| Standby mode | $P_{SB}$ | 0.010 | kW | | | | |
| Crankcase heater mode | $P_{CK}$ | 0.000 | kW | | | | |

| **Other items** | | | | | | | |
|---|---|---|---|---|---|---|---|
| Capacity control | variable | | | For air-to-water heat pumps: Rated air flow rate, outdoors | - | 2600 | $m^3/h$ |
| Sound power level, indoors/ outdoors | $L_{WA}$ | -/56 | dB | For water- or brine-to-water heat pumps: Rated brine or water flow rate, outdoor heat exchanger | - | N/A | $m^3/h$ |
| Annual energy consumption | $Q_{HE}$ | 1065 | kWh | | | | |
| For heat pump combination heater: | | | | | | | |
| **Declared load profile** | N/A | | | **Water heating energy efficiency** | $\eta_{wh}$ | N/A | % |
| Daily electricity consumption | $Q_{elec}$ | N/A | kWh | Daily fuel consumption | $Q_{fuel}$ | N/A | kWh |
| Annual electricity consumption | AEC | N/A | kWh | Annual fuel consumption | AFC | N/A | GJ |
| Contact details | See the back cover of the manual | | | | | | |

(*) For heat pump space heaters and heat pump combination heaters, the rated heat output Prated is equal to the design load for heating Pdesignh, and the rated heat output of a supplementary heater Psup is equal to the supplementary capacity for heating sup(Tj).
(**) If Cdh is not determined by measurement then the default degradation coefficient is Cdh = 0.9.

## Technical parameters

| | |
|---|---|
| Model(s): | 4kW(heating 3kW);4kW |
| Air-to-water heat pump | yes |
| Water-to-water heat pump | no |
| Brine-to-water heat pump | no |
| Low-temperature heat pump | no |
| Equipped with a supplementary heater | yes(for 4kW(heating 3kW))<br>no(for 4kW) |
| Heat pump combination heater | no |
| Declared climate condition: | colder |

Parameters are declared for low-temperature application.

| Item | Symbol | Value | Unit | Item | Symbol | Value | Unit |
|---|---|---|---|---|---|---|---|
| **Rated heat output (*)** | Prated | 5.0 | kW | **Seasonal space heating energy efficiency** | $\eta_s$ | 160 | % |
| Declared capacity for heating for part load at indoor temperature 20 °C and outdoor temperature Tj | | | | Declared coefficient of performance or primary energy ratio for part load at indoor temperature 20 °C and outdoor temperature Tj | | | |
| $T_j$ = – 7°C | Prated | 3.0 | kW | $T_j$ = – 7°C | COPd | 3.45 | - |
| $T_j$ = + 2°C | Pdh | 1.9 | kW | $T_j$ = + 2°C | COPd | 5.00 | - |
| $T_j$ = + 7°C | Pdh | 1.2 | kW | $T_j$ = + 7°C | COPd | 5.73 | - |
| $T_j$ = + 12°C | Pdh | 1.6 | kW | $T_j$ = + 12°C | COPd | 7.84 | - |
| $T_j$ = bivalent temperature | Pdh | 4.1 | kW | $T_j$ = bivalent temperature | COPd | 2.51 | - |
| $T_j$ = operation limit temperature | Pdh | 3.3 | kW | $T_j$ = operation limit temperature | COPd | 1.72 | - |
| For air-to-water heat pumps: $T_j$ = – 15°C (if TOL < – 20°C) | Pdh | N/A | kW | For air-to-water heat pumps: $T_j$ = – 15°C (if TOL < – 20°C) | COPd | N/A | - |
| Bivalent temperature | $T_{biv}$ | -15 | °C | For air-to-water heat pumps: Operation limit temperature | TOL | -22 | °C |
| Cycling interval capacity for heating | $P_{cych}$ | N/A | kW | Cycling interval efficiency | $COP_{cyc}$ | N/A | - |
| Degradation co-efficient (**) | Cdh | 0.9 | - | Heating water operating limit temperature | WTOL | 65 | °C |
| Power consumption in modes other than active mode | | | | Supplementary heater | | | |
| Off mode | $P_{OFF}$ | 0.010 | kW | Rated heat output (**) | $P_{sup}$ | 2.7 | kW |
| Thermostat-off mode | $P_{TO}$ | 0.010 | kW | Type of energy input | Electric | | |
| Standby mode | $P_{SB}$ | 0.010 | kW | | | | |
| Crankcase heater mode | $P_{CK}$ | 0.000 | kW | | | | |

| **Other items** | | | | | | | |
|---|---|---|---|---|---|---|---|
| Capacity control | variable | | | For air-to-water heat pumps: Rated air flow rate, outdoors | - | 2600 | $m^3/h$ |
| Sound power level, indoors/ outdoors | $L_{WA}$ | -/56 | dB | For water- or brine-to-water heat pumps: Rated brine or water flow rate, outdoor heat exchanger | - | N/A | $m^3/h$ |
| Annual energy consumption | $Q_{HE}$ | 3038 | kWh | | | | |
| For heat pump combination heater: | | | | | | | |
| **Declared load profile** | N/A | | | **Water heating energy efficiency** | $\eta_{wh}$ | N/A | % |
| Daily electricity consumption | $Q_{elec}$ | N/A | kWh | Daily fuel consumption | $Q_{fuel}$ | N/A | kWh |
| Annual electricity consumption | AEC | N/A | kWh | Annual fuel consumption | AFC | N/A | GJ |
| Contact details | See the back cover of the manual | | | | | | |

(*) For heat pump space heaters and heat pump combination heaters, the rated heat output Prated is equal to the design load for heating Pdesignh, and the rated heat output of a supplementary heater Psup is equal to the supplementary capacity for heating sup(Tj).
(**) If Cdh is not determined by measurement then the default degradation coefficient is Cdh = 0.9.

## Technical parameters

| | |
|---|---|
| Model(s): | 4kW(heating 3kW);4kW |
| Air-to-water heat pump | yes |
| Water-to-water heat pump | no |
| Brine-to-water heat pump | no |
| Low-temperature heat pump | no |
| Equipped with a supplementary heater | yes(for 4kW(heating 3kW))<br>no(for 4kW) |
| Heat pump combination heater | no |
| Declared climate condition: | average |
| Parameters are declared for medium-temperature application. | |

| Item | Symbol | Value | Unit | Item | Symbol | Value | Unit |
|---|---|---|---|---|---|---|---|
| **Rated heat output (*)** | Prated | 4.7 | kW | **Seasonal space heating energy efficiency** | $\eta_s$ | 131 | % |
| Declared capacity for heating for part load at indoor temperature 20 °C and outdoor temperature Tj | | | | Declared coefficient of performance or primary energy ratio for part load at indoor temperature 20 °C and outdoor temperature Tj | | | |
| $T_j$ = – 7°C | Prated | 4.2 | kW | $T_j$ = – 7°C | COPd | 2.14 | - |
| $T_j$ = + 2°C | Pdh | 2.5 | kW | $T_j$ = + 2°C | COPd | 3.26 | - |
| $T_j$ = + 7°C | Pdh | 1.7 | kW | $T_j$ = + 7°C | COPd | 4.44 | - |
| $T_j$ = + 12°C | Pdh | 1.4 | kW | $T_j$ = + 12°C | COPd | 5.54 | - |
| $T_j$ = bivalent temperature | Pdh | 4.2 | kW | $T_j$ = bivalent temperature | COPd | 2.14 | - |
| $T_j$ = operation limit temperature | Pdh | 3.7 | kW | $T_j$ = operation limit temperature | COPd | 1.72 | - |
| For air-to-water heat pumps: $T_j$ = – 15°C (if TOL < – 20°C) | Pdh | N/A | kW | For air-to-water heat pumps: $T_j$ = – 15°C (if TOL < – 20°C) | COPd | N/A | - |
| Bivalent temperature | $T_{biv}$ | -7 | °C | For air-to-water heat pumps: Operation limit temperature | TOL | -10 | °C |
| Cycling interval capacity for heating | $P_{cych}$ | N/A | kW | Cycling interval efficiency | $COP_{cyc}$ | N/A | - |
| Degradation co-efficient (**) | Cdh | 0.9 | - | Heating water operating limit temperature | WTOL | 65 | °C |
| Power consumption in modes other than active mode | | | | Supplementary heater | | | |
| Off mode | $P_{OFF}$ | 0.010 | kW | Rated heat output (**) | $P_{sup}$ | 1.0 | kW |
| Thermostat-off mode | $P_{TO}$ | 0.010 | kW | Type of energy input | Electric | | |
| Standby mode | $P_{SB}$ | 0.010 | kW | | | | |
| Crankcase heater mode | $P_{CK}$ | 0.000 | kW | | | | |

| **Other items** | | | | | | | |
|---|---|---|---|---|---|---|---|
| Capacity control | variable | | | For air-to-water heat pumps: Rated air flow rate, outdoors | - | 2600 | $m^3/h$ |
| Sound power level, indoors/ outdoors | $L_{WA}$ | -/56 | dB | For water- or brine-to-water heat pumps: Rated brine or water flow rate, outdoor heat exchanger | - | N/A | $m^3/h$ |
| Annual energy consumption | $Q_{HE}$ | 2898 | kWh | | | | |
| For heat pump combination heater: | | | | | | | |
| **Declared load profile** | N/A | | | **Water heating energy efficiency** | $\eta_{wh}$ | N/A | % |
| Daily electricity consumption | $Q_{elec}$ | N/A | kWh | Daily fuel consumption | $Q_{fuel}$ | N/A | kWh |
| Annual electricity consumption | AEC | N/A | kWh | Annual fuel consumption | AFC | N/A | GJ |
| Contact details | See the back cover of the manual | | | | | | |

(*) For heat pump space heaters and heat pump combination heaters, the rated heat output Prated is equal to the design load for heating Pdesignh, and the rated heat output of a supplementary heater Psup is equal to the supplementary capacity for heating sup(Tj).
(**) If Cdh is not determined by measurement then the default degradation coefficient is Cdh = 0.9.

## Technical parameters

| | |
|---|---|
| Model(s): | 4kW(heating 3kW);4kW |
| Air-to-water heat pump | yes |
| Water-to-water heat pump | no |
| Brine-to-water heat pump | no |
| Low-temperature heat pump | no |
| Equipped with a supplementary heater | yes(for 4kW(heating 3kW))<br>no(for 4kW) |
| Heat pump combination heater | no |
| Declared climate condition: | warmer |
| Parameters are declared for medium-temperature application. | |

| Item | Symbol | Value | Unit | Item | Symbol | Value | Unit |
|---|---|---|---|---|---|---|---|
| **Rated heat output (*)** | Prated | 5.0 | kW | **Seasonal space heating energy efficiency** | $\eta_s$ | 165 | % |
| Declared capacity for heating for part load at indoor temperature 20 °C and outdoor temperature Tj | | | | Declared coefficient of performance or primary energy ratio for part load at indoor temperature 20 °C and outdoor temperature Tj | | | |
| $T_j$ = – 7°C | Prated | N/A | kW | $T_j$ = – 7°C | COPd | N/A | - |
| $T_j$ = + 2°C | Pdh | 5.0 | kW | $T_j$ = + 2°C | COPd | 2.31 | - |
| $T_j$ = + 7°C | Pdh | 3.2 | kW | $T_j$ = + 7°C | COPd | 3.68 | - |
| $T_j$ = + 12°C | Pdh | 1.5 | kW | $T_j$ = + 12°C | COPd | 5.21 | - |
| $T_j$ = bivalent temperature | Pdh | 3.2 | kW | $T_j$ = bivalent temperature | COPd | 3.68 | - |
| $T_j$ = operation limit temperature | Pdh | 5.0 | kW | $T_j$ = operation limit temperature | COPd | 2.31 | - |
| For air-to-water heat pumps: $T_j$ = – 15°C (if TOL < – 20°C) | Pdh | N/A | kW | For air-to-water heat pumps: $T_j$ = – 15°C (if TOL < – 20°C) | COPd | N/A | - |
| Bivalent temperature | $T_{biv}$ | 7 | °C | For air-to-water heat pumps: Operation limit temperature | TOL | 2 | °C |
| Cycling interval capacity for heating | $P_{cych}$ | N/A | kW | Cycling interval efficiency | $COP_{cyc}$ | N/A | - |
| Degradation co-efficient (**) | Cdh | 0.9 | - | Heating water operating limit temperature | WTOL | 65 | °C |
| Power consumption in modes other than active mode | | | | Supplementary heater | | | |
| Off mode | $P_{OFF}$ | 0.010 | kW | Rated heat output (**) | $P_{sup}$ | 0.0 | kW |
| Thermostat-off mode | $P_{TO}$ | 0.010 | kW | Type of energy input | Electric | | |
| Standby mode | $P_{SB}$ | 0.010 | kW | | | | |
| Crankcase heater mode | $P_{CK}$ | 0.000 | kW | | | | |

| **Other items** | | | | | | | |
|---|---|---|---|---|---|---|---|
| Capacity control | variable | | | For air-to-water heat pumps: Rated air flow rate, outdoors | - | 2600 | $m^3/h$ |
| Sound power level, indoors/ outdoors | $L_{WA}$ | -/56 | dB | For water- or brine-to-water heat pumps: Rated brine or water flow rate, outdoor heat exchanger | - | N/A | $m^3/h$ |
| Annual energy consumption | $Q_{HE}$ | 1604 | kWh | | | | |
| For heat pump combination heater: | | | | | | | |
| **Declared load profile** | N/A | | | **Water heating energy efficiency** | $\eta_{wh}$ | N/A | % |
| Daily electricity consumption | $Q_{elec}$ | N/A | kWh | Daily fuel consumption | $Q_{fuel}$ | N/A | kWh |
| Annual electricity consumption | AEC | N/A | kWh | Annual fuel consumption | AFC | N/A | GJ |
| Contact details | See the back cover of the manual | | | | | | |

(*) For heat pump space heaters and heat pump combination heaters, the rated heat output Prated is equal to the design load for heating Pdesignh, and the rated heat output of a supplementary heater Psup is equal to the supplementary capacity for heating sup(Tj).
(**) If Cdh is not determined by measurement then the default degradation coefficient is Cdh = 0.9.

## Technical parameters

| | |
|---|---|
| Model(s): | 4kW(heating 3kW);4kW |
| Air-to-water heat pump | yes |
| Water-to-water heat pump | no |
| Brine-to-water heat pump | no |
| Low-temperature heat pump | no |
| Equipped with a supplementary heater | yes(for 4kW(heating 3kW))<br>no(for 4kW) |
| Heat pump combination heater | no |
| Declared climate condition: | colder |
| Parameters are declared for medium-temperature application. | |

| Item | Symbol | Value | Unit | Item | Symbol | Value | Unit |
|---|---|---|---|---|---|---|---|
| **Rated heat output (*)** | Prated | 3.7 | kW | **Seasonal space heating energy efficiency** | $\eta_s$ | 107 | % |
| Declared capacity for heating for part load at indoor temperature 20 °C and outdoor temperature Tj | | | | Declared coefficient of performance or primary energy ratio for part load at indoor temperature 20 °C and outdoor temperature Tj | | | |
| $T_j$ = – 7°C | Prated | 2.3 | kW | $T_j$ = – 7°C | COPd | 2.34 | - |
| $T_j$ = + 2°C | Pdh | 1.4 | kW | $T_j$ = + 2°C | COPd | 3.22 | - |
| $T_j$ = + 7°C | Pdh | 1.6 | kW | $T_j$ = + 7°C | COPd | 4.58 | - |
| $T_j$ = + 12°C | Pdh | 1.5 | kW | $T_j$ = + 12°C | COPd | 6.33 | - |
| $T_j$ = bivalent temperature | Pdh | 3.0 | kW | $T_j$ = bivalent temperature | COPd | 1.69 | - |
| $T_j$ = operation limit temperature | Pdh | 2.5 | kW | $T_j$ = operation limit temperature | COPd | 1.17 | - |
| For air-to-water heat pumps: $T_j$ = – 15°C (if TOL < – 20°C) | Pdh | N/A | kW | For air-to-water heat pumps: $T_j$ = – 15°C (if TOL < – 20°C) | COPd | N/A | - |
| Bivalent temperature | $T_{biv}$ | -15 | °C | For air-to-water heat pumps: Operation limit temperature | TOL | -22 | °C |
| Cycling interval capacity for heating | $P_{cych}$ | N/A | kW | Cycling interval efficiency | $COP_{cyc}$ | N/A | - |
| Degradation co-efficient (**) | Cdh | 0.9 | - | Heating water operating limit temperature | WTOL | 65 | °C |
| Power consumption in modes other than active mode | | | | Supplementary heater | | | |
| Off mode | $P_{OFF}$ | 0.010 | kW | Rated heat output (**) | $P_{sup}$ | 1.2 | kW |
| Thermostat-off mode | $P_{TO}$ | 0.010 | kW | Type of energy input | Electric | | |
| Standby mode | $P_{SB}$ | 0.010 | kW | | | | |
| Crankcase heater mode | $P_{CK}$ | 0.000 | kW | | | | |

| **Other items** | | | | | | | |
|---|---|---|---|---|---|---|---|
| Capacity control | variable | | | For air-to-water heat pumps: Rated air flow rate, outdoors | - | 2600 | $m^3/h$ |
| Sound power level, indoors/ outdoors | $L_{WA}$ | -/56 | dB | For water- or brine-to-water heat pumps: Rated brine or water flow rate, outdoor heat exchanger | - | N/A | $m^3/h$ |
| Annual energy consumption | $Q_{HE}$ | 3308 | kWh | | | | |
| For heat pump combination heater: | | | | | | | |
| **Declared load profile** | N/A | | | **Water heating energy efficiency** | $\eta_{wh}$ | N/A | % |
| Daily electricity consumption | $Q_{elec}$ | N/A | kWh | Daily fuel consumption | $Q_{fuel}$ | N/A | kWh |
| Annual electricity consumption | AEC | N/A | kWh | Annual fuel consumption | AFC | N/A | GJ |
| Contact details | See the back cover of the manual | | | | | | |

(*) For heat pump space heaters and heat pump combination heaters, the rated heat output Prated is equal to the design load for heating Pdesignh, and the rated heat output of a supplementary heater Psup is equal to the supplementary capacity for heating sup(Tj).
(**) If Cdh is not determined by measurement then the default degradation coefficient is Cdh = 0.9.

## Technical parameters

| | |
|---|---|
| Model(s): | 6kW(heating 3kW);6kW |
| Air-to-water heat pump | yes |
| Water-to-water heat pump | no |
| Brine-to-water heat pump | no |
| Low-temperature heat pump | no |
| Equipped with a supplementary heater | yes(for 6kW(heating 3kW))<br>no(for 6kW) |
| Heat pump combination heater | no |
| Declared climate condition: | average |
| Parameters are declared for low-temperature application. | |

| Item | Symbol | Value | Unit | Item | Symbol | Value | Unit |
|---|---|---|---|---|---|---|---|
| **Rated heat output (*)** | Prated | 7.0 | kW | **Seasonal space heating energy efficiency** | $\eta_s$ | 182.7 | % |
| Declared capacity for heating for part load at indoor temperature 20 °C and outdoor temperature Tj | | | | Declared coefficient of performance or primary energy ratio for part load at indoor temperature 20 °C and outdoor temperature Tj | | | |
| $T_j$ = – 7°C | Prated | 6.2 | kW | $T_j$ = – 7°C | COPd | 2.74 | - |
| $T_j$ = + 2°C | Pdh | 3.6 | kW | $T_j$ = + 2°C | COPd | 4.39 | - |
| $T_j$ = + 7°C | Pdh | 2.5 | kW | $T_j$ = + 7°C | COPd | 6.72 | - |
| $T_j$ = + 12°C | Pdh | 1.4 | kW | $T_j$ = + 12°C | COPd | 8.13 | - |
| $T_j$ = bivalent temperature | Pdh | 6.2 | kW | $T_j$ = bivalent temperature | COPd | 2.74 | - |
| $T_j$ = operation limit temperature | Pdh | 6.0 | kW | $T_j$ = operation limit temperature | COPd | 2.55 | - |
| For air-to-water heat pumps: $T_j$ = – 15°C (if TOL < – 20°C) | Pdh | N/A | kW | For air-to-water heat pumps: $T_j$ = – 15°C (if TOL < – 20°C) | COPd | N/A | - |
| Bivalent temperature | $T_{biv}$ | -7 | °C | For air-to-water heat pumps: Operation limit temperature | TOL | -10 | °C |
| Cycling interval capacity for heating | $P_{cych}$ | N/A | kW | Cycling interval efficiency | $COP_{cyc}$ | N/A | - |
| Degradation co-efficient (**) | Cdh | 0.9 | - | Heating water operating limit temperature | WTOL | 65 | °C |
| Power consumption in modes other than active mode | | | | Supplementary heater | | | |
| Off mode | $P_{OFF}$ | 0.010 | kW | Rated heat output (**) | $P_{sup}$ | 1.0 | kW |
| Thermostat-off mode | $P_{TO}$ | 0.010 | kW | Type of energy input | Electric | | |
| Standby mode | $P_{SB}$ | 0.010 | kW | | | | |
| Crankcase heater mode | $P_{CK}$ | 0.000 | kW | | | | |

| **Other items** | | | | | | | |
|---|---|---|---|---|---|---|---|
| Capacity control | variable | | | For air-to-water heat pumps: Rated air flow rate, outdoors | - | 2800 | $m^3/h$ |
| Sound power level, indoors/ outdoors | $L_{WA}$ | -/59 | dB | For water- or brine-to-water heat pumps: Rated brine or water flow rate, outdoor heat exchanger | - | N/A | $m^3/h$ |
| Annual energy consumption | $Q_{HE}$ | 3120 | kWh | | | | |
| For heat pump combination heater: | | | | | | | |
| **Declared load profile** | N/A | | | **Water heating energy efficiency** | $\eta_{wh}$ | N/A | % |
| Daily electricity consumption | $Q_{elec}$ | N/A | kWh | Daily fuel consumption | $Q_{fuel}$ | N/A | kWh |
| Annual electricity consumption | AEC | N/A | kWh | Annual fuel consumption | AFC | N/A | GJ |
| Contact details | See the back cover of the manual | | | | | | |

(*) For heat pump space heaters and heat pump combination heaters, the rated heat output Prated is equal to the design load for heating Pdesignh, and the rated heat output of a supplementary heater Psup is equal to the supplementary capacity for heating sup(Tj).
(**) If Cdh is not determined by measurement then the default degradation coefficient is Cdh = 0.9.

## Technical parameters

| | |
|---|---|
| Model(s): | 6kW(heating 3kW);6kW |
| Air-to-water heat pump | yes |
| Water-to-water heat pump | no |
| Brine-to-water heat pump | no |
| Low-temperature heat pump | no |
| Equipped with a supplementary heater | yes(for 6kW(heating 3kW))<br>no(for 6kW) |
| Heat pump combination heater | no |
| Declared climate condition: | warmer |

Parameters are declared for low-temperature application.

| Item | Symbol | Value | Unit | Item | Symbol | Value | Unit |
|---|---|---|---|---|---|---|---|
| **Rated heat output (*)** | Prated | 6.0 | kW | **Seasonal space heating energy efficiency** | $\eta_s$ | 264 | % |
| Declared capacity for heating for part load at indoor temperature 20 °C and outdoor temperature Tj | | | | Declared coefficient of performance or primary energy ratio for part load at indoor temperature 20 °C and outdoor temperature Tj | | | |
| $T_j$ = – 7°C | Prated | N/A | kW | $T_j$ = – 7°C | COPd | N/A | - |
| $T_j$ = + 2°C | Pdh | 5.9 | kW | $T_j$ = + 2°C | COPd | 3.49 | - |
| $T_j$ = + 7°C | Pdh | 3.9 | kW | $T_j$ = + 7°C | COPd | 5.71 | - |
| $T_j$ = + 12°C | Pdh | 2.0 | kW | $T_j$ = + 12°C | COPd | 8.78 | - |
| $T_j$ = bivalent temperature | Pdh | 3.9 | kW | $T_j$ = bivalent temperature | COPd | 5.71 | - |
| $T_j$ = operation limit temperature | Pdh | 5.9 | kW | $T_j$ = operation limit temperature | COPd | 3.49 | - |
| For air-to-water heat pumps: $T_j$ = – 15°C (if TOL < – 20°C) | Pdh | N/A | kW | For air-to-water heat pumps: $T_j$ = – 15°C (if TOL < – 20°C) | COPd | N/A | - |
| Bivalent temperature | $T_{biv}$ | 7 | °C | For air-to-water heat pumps: Operation limit temperature | TOL | 2 | °C |
| Cycling interval capacity for heating | $P_{cych}$ | N/A | kW | Cycling interval efficiency | $COP_{cyc}$ | N/A | - |
| Degradation co-efficient (**) | Cdh | 0.9 | - | Heating water operating limit temperature | WTOL | 65 | °C |
| Power consumption in modes other than active mode | | | | Supplementary heater | | | |
| Off mode | $P_{OFF}$ | 0.010 | kW | Rated heat output (**) | $P_{sup}$ | 0.1 | kW |
| Thermostat-off mode | $P_{TO}$ | 0.010 | kW | Type of energy input | Electric | | |
| Standby mode | $P_{SB}$ | 0.010 | kW | | | | |
| Crankcase heater mode | $P_{CK}$ | 0.000 | kW | | | | |

**Other items**

| | | | | | | | |
|---|---|---|---|---|---|---|---|
| Capacity control | variable | | | For air-to-water heat pumps: Rated air flow rate, outdoors | - | 2800 | $m^3/h$ |
| Sound power level, indoors/ outdoors | $L_{WA}$ | -/59 | dB | For water- or brine-to-water heat pumps: Rated brine or water flow rate, outdoor heat exchanger | - | N/A | $m^3/h$ |
| Annual energy consumption | $Q_{HE}$ | 1202 | kWh | | | | |

For heat pump combination heater:

| | | | | | | | |
|---|---|---|---|---|---|---|---|
| **Declared load profile** | N/A | | | **Water heating energy efficiency** | $\eta_{wh}$ | N/A | % |
| Daily electricity consumption | $Q_{elec}$ | N/A | kWh | Daily fuel consumption | $Q_{fuel}$ | N/A | kWh |
| Annual electricity consumption | AEC | N/A | kWh | Annual fuel consumption | AFC | N/A | GJ |
| Contact details | See the back cover of the manual | | | | | | |

(*) For heat pump space heaters and heat pump combination heaters, the rated heat output Prated is equal to the design load for heating Pdesignh, and the rated heat output of a supplementary heater Psup is equal to the supplementary capacity for heating sup(Tj).
(**) If Cdh is not determined by measurement then the default degradation coefficient is Cdh = 0.9.

## Technical parameters

| | |
|---|---|
| Model(s): | 6kW(heating 3kW);6kW |
| Air-to-water heat pump | yes |
| Water-to-water heat pump | no |
| Brine-to-water heat pump | no |
| Low-temperature heat pump | no |
| Equipped with a supplementary heater | yes(for 6kW(heating 3kW))<br>no(for 6kW) |
| Heat pump combination heater | no |
| Declared climate condition: | colder |

Parameters are declared for low-temperature application.

| Item | Symbol | Value | Unit | Item | Symbol | Value | Unit |
|---|---|---|---|---|---|---|---|
| **Rated heat output (*)** | Prated | 6.0 | kW | **Seasonal space heating energy efficiency** | $\eta_s$ | 166 | % |
| Declared capacity for heating for part load at indoor temperature 20 °C and outdoor temperature Tj | | | | Declared coefficient of performance or primary energy ratio for part load at indoor temperature 20 °C and outdoor temperature Tj | | | |
| $T_j$ = – 7°C | Prated | 3.6 | kW | $T_j$ = – 7°C | COPd | 3.51 | - |
| $T_j$ = + 2°C | Pdh | 2.2 | kW | $T_j$ = + 2°C | COPd | 5.36 | - |
| $T_j$ = + 7°C | Pdh | 1.5 | kW | $T_j$ = + 7°C | COPd | 6.66 | - |
| $T_j$ = + 12°C | Pdh | 1.6 | kW | $T_j$ = + 12°C | COPd | 7.97 | - |
| $T_j$ = bivalent temperature | Pdh | 4.9 | kW | $T_j$ = bivalent temperature | COPd | 2.39 | - |
| $T_j$ = operation limit temperature | Pdh | 3.6 | kW | $T_j$ = operation limit temperature | COPd | 1.78 | - |
| For air-to-water heat pumps: $T_j$ = – 15°C (if TOL < – 20°C) | Pdh | N/A | kW | For air-to-water heat pumps: $T_j$ = – 15°C (if TOL < – 20°C) | COPd | N/A | - |
| Bivalent temperature | $T_{biv}$ | -15 | °C | For air-to-water heat pumps: Operation limit temperature | TOL | -22 | °C |
| Cycling interval capacity for heating | $P_{cych}$ | N/A | kW | Cycling interval efficiency | $COP_{cyc}$ | N/A | - |
| Degradation co-efficient (**) | Cdh | 0.9 | - | Heating water operating limit temperature | WTOL | 65 | °C |
| Power consumption in modes other than active mode | | | | Supplementary heater | | | |
| Off mode | $P_{OFF}$ | 0.010 | kW | Rated heat output (**) | $P_{sup}$ | 2.4 | kW |
| Thermostat-off mode | $P_{TO}$ | 0.010 | kW | Type of energy input | Electric | | |
| Standby mode | $P_{SB}$ | 0.010 | kW | | | | |
| Crankcase heater mode | $P_{CK}$ | 0.000 | kW | | | | |

| **Other items** | | | | | | | |
|---|---|---|---|---|---|---|---|
| Capacity control | variable | | | For air-to-water heat pumps: Rated air flow rate, outdoors | - | 2800 | $m^3/h$ |
| Sound power level, indoors/ outdoors | $L_{WA}$ | -/59 | dB | For water- or brine-to-water heat pumps: Rated brine or water flow rate, outdoor heat exchanger | - | N/A | $m^3/h$ |
| Annual energy consumption | $Q_{HE}$ | 3515 | kWh | | | | |
| For heat pump combination heater: | | | | | | | |
| **Declared load profile** | N/A | | | **Water heating energy efficiency** | $\eta_{wh}$ | N/A | % |
| Daily electricity consumption | $Q_{elec}$ | N/A | kWh | Daily fuel consumption | $Q_{fuel}$ | N/A | kWh |
| Annual electricity consumption | AEC | N/A | kWh | Annual fuel consumption | AFC | N/A | GJ |
| Contact details | See the back cover of the manual | | | | | | |

(*) For heat pump space heaters and heat pump combination heaters, the rated heat output Prated is equal to the design load for heating Pdesignh, and the rated heat output of a supplementary heater Psup is equal to the supplementary capacity for heating sup(Tj).
(**) If Cdh is not determined by measurement then the default degradation coefficient is Cdh = 0.9.

## Technical parameters

| | |
|---|---|
| Model(s): | 6kW(heating 3kW);6kW |
| Air-to-water heat pump | yes |
| Water-to-water heat pump | no |
| Brine-to-water heat pump | no |
| Low-temperature heat pump | no |
| Equipped with a supplementary heater | yes(for 6kW(heating 3kW))<br>no(for 6kW) |
| Heat pump combination heater | no |
| Declared climate condition: | average |
| Parameters are declared for medium-temperature application. | |

| Item | Symbol | Value | Unit | Item | Symbol | Value | Unit |
|---|---|---|---|---|---|---|---|
| **Rated heat output (*)** | Prated | 6.0 | kW | **Seasonal space heating energy efficiency** | $\eta_s$ | 137 | % |
| Declared capacity for heating for part load at indoor temperature 20 °C and outdoor temperature Tj | | | | Declared coefficient of performance or primary energy ratio for part load at indoor temperature 20 °C and outdoor temperature Tj | | | |
| $T_j$ = – 7°C | Prated | 5.3 | kW | $T_j$ = – 7°C | COPd | 2.12 | - |
| $T_j$ = + 2°C | Pdh | 3.2 | kW | $T_j$ = + 2°C | COPd | 3.43 | - |
| $T_j$ = + 7°C | Pdh | 2.1 | kW | $T_j$ = + 7°C | COPd | 4.63 | - |
| $T_j$ = + 12°C | Pdh | 1.4 | kW | $T_j$ = + 12°C | COPd | 5.70 | - |
| $T_j$ = bivalent temperature | Pdh | 5.3 | kW | $T_j$ = bivalent temperature | COPd | 2.12 | - |
| $T_j$ = operation limit temperature | Pdh | 5.0 | kW | $T_j$ = operation limit temperature | COPd | 1.81 | - |
| For air-to-water heat pumps: $T_j$ = – 15°C (if TOL < – 20°C) | Pdh | N/A | kW | For air-to-water heat pumps: $T_j$ = – 15°C (if TOL < – 20°C) | COPd | N/A | - |
| Bivalent temperature | $T_{biv}$ | -7 | °C | For air-to-water heat pumps: Operation limit temperature | TOL | -10 | °C |
| Cycling interval capacity for heating | $P_{cych}$ | N/A | kW | Cycling interval efficiency | $COP_{cyc}$ | N/A | - |
| Degradation co-efficient (**) | Cdh | 0.9 | - | Heating water operating limit temperature | WTOL | 65 | °C |
| Power consumption in modes other than active mode | | | | Supplementary heater | | | |
| Off mode | $P_{OFF}$ | 0.010 | kW | Rated heat output (**) | $P_{sup}$ | 1.0 | kW |
| Thermostat-off mode | $P_{TO}$ | 0.010 | kW | Type of energy input | Electric | | |
| Standby mode | $P_{SB}$ | 0.010 | kW | | | | |
| Crankcase heater mode | $P_{CK}$ | 0.000 | kW | | | | |

| **Other items** | | | | | | | |
|---|---|---|---|---|---|---|---|
| Capacity control | variable | | | For air-to-water heat pumps: Rated air flow rate, outdoors | - | 2800 | $m^3/h$ |
| Sound power level, indoors/ outdoors | $L_{WA}$ | -/59 | dB | For water- or brine-to-water heat pumps: Rated brine or water flow rate, outdoor heat exchanger | - | N/A | $m^3/h$ |
| Annual energy consumption | $Q_{HE}$ | 3557 | kWh | | | | |
| For heat pump combination heater: | | | | | | | |
| **Declared load profile** | N/A | | | **Water heating energy efficiency** | $\eta_{wh}$ | N/A | % |
| Daily electricity consumption | $Q_{elec}$ | N/A | kWh | Daily fuel consumption | $Q_{fuel}$ | N/A | kWh |
| Annual electricity consumption | AEC | N/A | kWh | Annual fuel consumption | AFC | N/A | GJ |
| Contact details | See the back cover of the manual | | | | | | |

(*) For heat pump space heaters and heat pump combination heaters, the rated heat output Prated is equal to the design load for heating Pdesignh, and the rated heat output of a supplementary heater Psup is equal to the supplementary capacity for heating sup(Tj).
(**) If Cdh is not determined by measurement then the default degradation coefficient is Cdh = 0.9.

## Technical parameters

| | |
|---|---|
| Model(s): | 6kW(heating 3kW);6kW |
| Air-to-water heat pump | yes |
| Water-to-water heat pump | no |
| Brine-to-water heat pump | no |
| Low-temperature heat pump | no |
| Equipped with a supplementary heater | yes(for 6kW(heating 3kW))<br>no(for 6kW) |
| Heat pump combination heater | no |
| Declared climate condition: | warmer |
| Parameters are declared for medium-temperature application. | |

| Item | Symbol | Value | Unit | Item | Symbol | Value | Unit |
|---|---|---|---|---|---|---|---|
| **Rated heat output (*)** | Prated | 5.0 | kW | **Seasonal space heating energy efficiency** | $\eta_s$ | 167 | % |
| Declared capacity for heating for part load at indoor temperature 20 °C and outdoor temperature Tj | | | | Declared coefficient of performance or primary energy ratio for part load at indoor temperature 20 °C and outdoor temperature Tj | | | |
| $T_j$ = – 7°C | Prated | N/A | kW | $T_j$ = – 7°C | COPd | N/A | - |
| $T_j$ = + 2°C | Pdh | 5.0 | kW | $T_j$ = + 2°C | COPd | 2.37 | - |
| $T_j$ = + 7°C | Pdh | 3.2 | kW | $T_j$ = + 7°C | COPd | 3.72 | - |
| $T_j$ = + 12°C | Pdh | 1.6 | kW | $T_j$ = + 12°C | COPd | 5.41 | - |
| $T_j$ = bivalent temperature | Pdh | 3.2 | kW | $T_j$ = bivalent temperature | COPd | 3.72 | - |
| $T_j$ = operation limit temperature | Pdh | 5.0 | kW | $T_j$ = operation limit temperature | COPd | 2.37 | - |
| For air-to-water heat pumps: $T_j$ = – 15°C (if TOL < – 20°C) | Pdh | N/A | kW | For air-to-water heat pumps: $T_j$ = – 15°C (if TOL < – 20°C) | COPd | N/A | - |
| Bivalent temperature | $T_{biv}$ | 7 | °C | For air-to-water heat pumps: Operation limit temperature | TOL | 2 | °C |
| Cycling interval capacity for heating | $P_{cych}$ | N/A | kW | Cycling interval efficiency | $COP_{cyc}$ | N/A | - |
| Degradation co-efficient (**) | Cdh | 0.9 | - | Heating water operating limit temperature | WTOL | 65 | °C |
| Power consumption in modes other than active mode | | | | Supplementary heater | | | |
| Off mode | $P_{OFF}$ | 0.010 | kW | Rated heat output (**) | $P_{sup}$ | 0.0 | kW |
| Thermostat-off mode | $P_{TO}$ | 0.010 | kW | Type of energy input | Electric | | |
| Standby mode | $P_{SB}$ | 0.010 | kW | | | | |
| Crankcase heater mode | $P_{CK}$ | 0.000 | kW | | | | |

| **Other items** | | | | | | | |
|---|---|---|---|---|---|---|---|
| Capacity control | variable | | | For air-to-water heat pumps: Rated air flow rate, outdoors | - | 2800 | $m^3/h$ |
| Sound power level, indoors/ outdoors | $L_{WA}$ | -/59 | dB | For water- or brine-to-water heat pumps: Rated brine or water flow rate, outdoor heat exchanger | - | N/A | $m^3/h$ |
| Annual energy consumption | $Q_{HE}$ | 1580 | kWh | | | | |
| For heat pump combination heater: | | | | | | | |
| **Declared load profile** | N/A | | | **Water heating energy efficiency** | $\eta_{wh}$ | N/A | % |
| Daily electricity consumption | $Q_{elec}$ | N/A | kWh | Daily fuel consumption | $Q_{fuel}$ | N/A | kWh |
| Annual electricity consumption | AEC | N/A | kWh | Annual fuel consumption | AFC | N/A | GJ |
| Contact details | See the back cover of the manual | | | | | | |

(*) For heat pump space heaters and heat pump combination heaters, the rated heat output Prated is equal to the design load for heating Pdesignh, and the rated heat output of a supplementary heater Psup is equal to the supplementary capacity for heating sup(Tj).
(**) If Cdh is not determined by measurement then the default degradation coefficient is Cdh = 0.9.

## Technical parameters

| | |
|---|---|
| Model(s): | 6kW(heating 3kW);6kW |
| Air-to-water heat pump | yes |
| Water-to-water heat pump | no |
| Brine-to-water heat pump | no |
| Low-temperature heat pump | no |
| Equipped with a supplementary heater | yes(for 6kW(heating 3kW))<br>no(for 6kW) |
| Heat pump combination heater | no |
| Declared climate condition: | colder |

Parameters are declared for medium-temperature application.

| Item | Symbol | Value | Unit | Item | Symbol | Value | Unit |
|---|---|---|---|---|---|---|---|
| **Rated heat output (*)** | Prated | 5.0 | kW | **Seasonal space heating energy efficiency** | $\eta_s$ | 113 | % |
| Declared capacity for heating for part load at indoor temperature 20 °C and outdoor temperature Tj | | | | Declared coefficient of performance or primary energy ratio for part load at indoor temperature 20 °C and outdoor temperature Tj | | | |
| $T_j$ = – 7°C | Prated | 3.1 | kW | $T_j$ = – 7°C | COPd | 2.49 | - |
| $T_j$ = + 2°C | Pdh | 1.8 | kW | $T_j$ = + 2°C | COPd | 3.52 | - |
| $T_j$ = + 7°C | Pdh | 1.2 | kW | $T_j$ = + 7°C | COPd | 4.10 | - |
| $T_j$ = + 12°C | Pdh | 1.4 | kW | $T_j$ = + 12°C | COPd | 6.18 | - |
| $T_j$ = bivalent temperature | Pdh | 4.0 | kW | $T_j$ = bivalent temperature | COPd | 1.74 | - |
| $T_j$ = operation limit temperature | Pdh | 2.5 | kW | $T_j$ = operation limit temperature | COPd | 1.17 | - |
| For air-to-water heat pumps: $T_j$ = – 15°C (if TOL < – 20°C) | Pdh | N/A | kW | For air-to-water heat pumps: $T_j$ = – 15°C (if TOL < – 20°C) | COPd | N/A | - |
| Bivalent temperature | $T_{biv}$ | -15 | °C | For air-to-water heat pumps: Operation limit temperature | TOL | -22 | °C |
| Cycling interval capacity for heating | $P_{cych}$ | N/A | kW | Cycling interval efficiency | $COP_{cyc}$ | N/A | - |
| Degradation co-efficient (**) | Cdh | 0.9 | - | Heating water operating limit temperature | WTOL | 65 | °C |
| Power consumption in modes other than active mode | | | | Supplementary heater | | | |
| Off mode | $P_{OFF}$ | 0.010 | kW | Rated heat output (**) | $P_{sup}$ | 2.5 | kW |
| Thermostat-off mode | $P_{TO}$ | 0.010 | kW | Type of energy input | Electric | | |
| Standby mode | $P_{SB}$ | 0.010 | kW | | | | |
| Crankcase heater mode | $P_{CK}$ | 0.000 | kW | | | | |

| **Other items** | | | | | | | |
|---|---|---|---|---|---|---|---|
| Capacity control | variable | | | For air-to-water heat pumps: Rated air flow rate, outdoors | - | 2800 | $m^3/h$ |
| Sound power level, indoors/ outdoors | $L_{WA}$ | -/59 | dB | For water- or brine-to-water heat pumps: Rated brine or water flow rate, outdoor heat exchanger | - | N/A | $m^3/h$ |
| Annual energy consumption | $Q_{HE}$ | 4204 | kWh | | | | |
| For heat pump combination heater: | | | | | | | |
| **Declared load profile** | N/A | | | **Water heating energy efficiency** | $\eta_{wh}$ | N/A | % |
| Daily electricity consumption | $Q_{elec}$ | N/A | kWh | Daily fuel consumption | $Q_{fuel}$ | N/A | kWh |
| Annual electricity consumption | AEC | N/A | kWh | Annual fuel consumption | AFC | N/A | GJ |
| Contact details | See the back cover of the manual | | | | | | |

(*) For heat pump space heaters and heat pump combination heaters, the rated heat output Prated is equal to the design load for heating Pdesignh, and the rated heat output of a supplementary heater Psup is equal to the supplementary capacity for heating sup(Tj).
(**) If Cdh is not determined by measurement then the default degradation coefficient is Cdh = 0.9.

## Technical parameters

| | |
|---|---|
| Model(s): | 8kW(heating 3kW);8kW |
| Air-to-water heat pump: | yes |
| Water-to-water heat pump: | no |
| Brine-to-water heat pump: | no |
| Low-temperature heat pump: | no |
| Equipped with a supplementary heater: | yes(for 8kW(heating 3kW))<br>no(for 8kW) |
| Heat pump combination heater: | no |
| Declared climate condition: | average |

Parameters are declared for low-temperature application.

| Item | Symbol | Value | Unit | Item | Symbol | Value | Unit |
|---|---|---|---|---|---|---|---|
| **Rated heat output (*)** | $P_{rated}$ | 8 | kW | **Seasonal space heating energy efficiency** | $\eta_s$ | 200 | % |
| Declared capacity for heating for part load at indoor temperature 20 °C and outdoor temperature Tj | | | | Declared coefficient of performance or primary energy ratio for part load at indoor temperature 20 °C and outdoor temperature Tj | | | |
| $T_j$ = – 7°C | $P_{dh}$ | 7.1 | kW | $T_j$ = – 7°C | $COP_d$ | 3.12 | - |
| $T_j$ = + 2°C | $P_{dh}$ | 4.7 | kW | $T_j$ = + 2°C | $COP_d$ | 4.99 | - |
| $T_j$ = + 7°C | $P_{dh}$ | 3.0 | kW | $T_j$ = + 7°C | $COP_d$ | 6.81 | - |
| $T_j$ = + 12°C | $P_{dh}$ | 1.7 | kW | $T_j$ = + 12°C | $COP_d$ | 8.00 | - |
| $T_j$ = bivalent temperature | $P_{dh}$ | 7.1 | kW | $T_j$ = bivalent temperature | $COP_d$ | 3.12 | - |
| $T_j$ = operation limit temperature | $P_{dh}$ | 6.5 | kW | $T_j$ = operation limit temperature | $COP_d$ | 2.84 | - |
| For air-to-water heat pumps: $T_j$ = – 15°C (if TOL < – 20°C) | $P_{dh}$ | N/A | kW | For air-to-water heat pumps: $T_j$ = – 15°C (if TOL < – 20°C) | $COP_d$ | N/A | - |
| Bivalent temperature | $T_{biv}$ | -7 | °C | For air-to-water heat pumps: Operation limit temperature | TOL | -10 | °C |
| Cycling interval capacity for heating | $P_{cych}$ | N/A | kW | Cycling interval efficiency | $COP_{cyc}$ | N/A | - |
| Degradation co-efficient (**) | $C_{dh}$ | 0.9 | - | Heating water operating limit temperature | WTOL | 65 | °C |
| Power consumption in modes other than active mode | | | | Supplementary heater | | | |
| Off mode | $P_{OFF}$ | 0.014 | kW | Rated heat output (**) | $P_{sup}$ | 1.5 | kW |
| Thermostat-off mode | $P_{TO}$ | 0.024 | kW | Type of energy input | Electric | | |
| Standby mode | $P_{SB}$ | 0.014 | kW | | | | |
| Crankcase heater mode | $P_{CK}$ | 0.000 | kW | | | | |

| **Other items** | | | | | | | |
|---|---|---|---|---|---|---|---|
| Capacity control | variable | | | For air-to-water heat pumps: Rated air flow rate, outdoors | - | 4000 | $m^3/h$ |
| Sound power level, indoors/ outdoors | $L_{WA}$ | -/60 | dB | For water- or brine-to-water heat pumps: Rated brine or water flow rate, outdoor heat exchanger | - | N/A | $m^3/h$ |
| Annual energy consumption | $Q_{HE}$ | 3276 | kWh | | | | |
| For heat pump combination heater: | | | | | | | |
| **Declared load profile** | N/A | | | **Water heating energy efficiency** | $\eta_{wh}$ | N/A | % |
| Daily electricity consumption | $Q_{elec}$ | N/A | kWh | Daily fuel consumption | $Q_{fuel}$ | N/A | kWh |
| Annual electricity consumption | AEC | N/A | kWh | Annual fuel consumption | AFC | N/A | GJ |
| Contact details | See the back cover of the manual | | | | | | |

(*) For heat pump space heaters and heat pump combination heaters, the rated heat output Prated is equal to the design load for heating Pdesignh, and the rated heat output of a supplementary heater Psup is equal to the supplementary capacity for heating sup(Tj).
(**) If Cdh is not determined by measurement then the default degradation coefficient is Cdh = 0.9.

## Technical parameters

| | |
|---|---|
| Model(s): | 8kW(heating 3kW);8kW |
| Air-to-water heat pump: | yes |
| Water-to-water heat pump: | no |
| Brine-to-water heat pump: | no |
| Low-temperature heat pump: | no |
| Equipped with a supplementary heater: | yes(for 8kW(heating 3kW))<br>no(for 8kW) |
| Heat pump combination heater: | no |
| Declared climate condition: | warmer |

Parameters are declared for low-temperature application.

| Item | Symbol | Value | Unit | Item | Symbol | Value | Unit |
|---|---|---|---|---|---|---|---|
| **Rated heat output (*)** | $P_{rated}$ | 8 | kW | **Seasonal space heating energy efficiency** | $\eta_s$ | 278 | % |
| Declared capacity for heating for part load at indoor temperature 20 °C and outdoor temperature Tj | | | | Declared coefficient of performance or primary energy ratio for part load at indoor temperature 20 °C and outdoor temperature Tj | | | |
| $T_j$ = – 7°C | $P_{dh}$ | N/A | kW | $T_j$ = – 7°C | $COP_d$ | N/A | - |
| $T_j$ = + 2°C | $P_{dh}$ | 7.7 | kW | $T_j$ = + 2°C | $COP_d$ | 3.82 | - |
| $T_j$ = + 7°C | $P_{dh}$ | 5.0 | kW | $T_j$ = + 7°C | $COP_d$ | 6.12 | - |
| $T_j$ = + 12°C | $P_{dh}$ | 2.6 | kW | $T_j$ = + 12°C | $COP_d$ | 9.15 | - |
| $T_j$ = bivalent temperature | $P_{dh}$ | 5.0 | kW | $T_j$ = bivalent temperature | $COP_d$ | 6.12 | - |
| $T_j$ = operation limit temperature | $P_{dh}$ | 7.7 | kW | $T_j$ = operation limit temperature | $COP_d$ | 3.82 | - |
| For air-to-water heat pumps: $T_j$ = – 15°C (if TOL < – 20°C) | $P_{dh}$ | N/A | kW | For air-to-water heat pumps: $T_j$ = – 15°C (if TOL < – 20°C) | $COP_d$ | N/A | - |
| Bivalent temperature | $T_{biv}$ | 7 | °C | For air-to-water heat pumps: Operation limit temperature | TOL | 2 | °C |
| Cycling interval capacity for heating | $P_{cych}$ | N/A | kW | Cycling interval efficiency | $COP_{cyc}$ | N/A | - |
| Degradation co-efficient (**) | $C_{dh}$ | 0.9 | - | Heating water operating limit temperature | WTOL | 65 | °C |
| Power consumption in modes other than active mode | | | | Supplementary heater | | | |
| Off mode | $P_{OFF}$ | 0.014 | kW | Rated heat output (**) | $P_{sup}$ | 0.3 | kW |
| Thermostat-off mode | $P_{TO}$ | 0.024 | kW | Type of energy input | Electric | | |
| Standby mode | $P_{SB}$ | 0.014 | kW | | | | |
| Crankcase heater mode | $P_{CK}$ | 0.000 | kW | | | | |

| **Other items** | | | | | | | |
|---|---|---|---|---|---|---|---|
| Capacity control | variable | | | For air-to-water heat pumps: Rated air flow rate, outdoors | - | 4000 | $m^3/h$ |
| Sound power level, indoors/ outdoors | $L_{WA}$ | -/60 | dB | For water- or brine-to-water heat pumps: Rated brine or water flow rate, outdoor heat exchanger | - | N/A | $m^3/h$ |
| Annual energy consumption | $Q_{HE}$ | 1492 | kWh | | | | |
| For heat pump combination heater: | | | | | | | |
| **Declared load profile** | N/A | | | **Water heating energy efficiency** | $\eta_{wh}$ | N/A | % |
| Daily electricity consumption | $Q_{elec}$ | N/A | kWh | Daily fuel consumption | $Q_{fuel}$ | N/A | kWh |
| Annual electricity consumption | AEC | N/A | kWh | Annual fuel consumption | AFC | N/A | GJ |
| Contact details | See the back cover of the manual | | | | | | |

(*) For heat pump space heaters and heat pump combination heaters, the rated heat output Prated is equal to the design load for heating Pdesignh, and the rated heat output of a supplementary heater Psup is equal to the supplementary capacity for heating sup(Tj).
(**) If Cdh is not determined by measurement then the default degradation coefficient is Cdh = 0.9.

## Technical parameters

| | |
|---|---|
| Model(s): | 8kW(heating 3kW);8kW |
| Air-to-water heat pump: | yes |
| Water-to-water heat pump: | no |
| Brine-to-water heat pump: | no |
| Low-temperature heat pump: | no |
| Equipped with a supplementary heater: | yes(for 8kW(heating 3kW))<br>no(for 8kW) |
| Heat pump combination heater: | no |
| Declared climate condition: | colder |

Parameters are declared for low-temperature application.

| Item | Symbol | Value | Unit | Item | Symbol | Value | Unit |
|---|---|---|---|---|---|---|---|
| **Rated heat output (*)** | $P_{rated}$ | 7 | kW | **Seasonal space heating energy efficiency** | $\eta_s$ | 167 | % |
| Declared capacity for heating for part load at indoor temperature 20 °C and outdoor temperature Tj | | | | Declared coefficient of performance or primary energy ratio for part load at indoor temperature 20 °C and outdoor temperature Tj | | | |
| $T_j$ = – 7°C | $P_{dh}$ | 4.4 | kW | $T_j$ = – 7°C | $COP_d$ | 3.59 | - |
| $T_j$ = + 2°C | $P_{dh}$ | 2.6 | kW | $T_j$ = + 2°C | $COP_d$ | 5.30 | - |
| $T_j$ = + 7°C | $P_{dh}$ | 1.6 | kW | $T_j$ = + 7°C | $COP_d$ | 5.98 | - |
| $T_j$ = + 12°C | $P_{dh}$ | 1.9 | kW | $T_j$ = + 12°C | $COP_d$ | 8.42 | - |
| $T_j$ = bivalent temperature | $P_{dh}$ | 5.7 | kW | $T_j$ = bivalent temperature | $COP_d$ | 2.61 | - |
| $T_j$ = operation limit temperature | $P_{dh}$ | 4.0 | kW | $T_j$ = operation limit temperature | $COP_d$ | 1.93 | - |
| For air-to-water heat pumps: $T_j$ = – 15°C (if TOL < – 20°C) | $P_{dh}$ | N/A | kW | For air-to-water heat pumps: $T_j$ = – 15°C (if TOL < – 20°C) | $COP_d$ | N/A | - |
| Bivalent temperature | $T_{biv}$ | -15 | °C | For air-to-water heat pumps: Operation limit temperature | TOL | -22 | °C |
| Cycling interval capacity for heating | $P_{cych}$ | N/A | kW | Cycling interval efficiency | $COP_{cyc}$ | N/A | - |
| Degradation co-efficient (**) | $C_{dh}$ | 0.9 | - | Heating water operating limit temperature | WTOL | 65 | °C |
| Power consumption in modes other than active mode | | | | Supplementary heater | | | |
| Off mode | $P_{OFF}$ | 0.014 | kW | Rated heat output (**) | $P_{sup}$ | 3.0 | kW |
| Thermostat-off mode | $P_{TO}$ | 0.024 | kW | Type of energy input | Electric | | |
| Standby mode | $P_{SB}$ | 0.014 | kW | | | | |
| Crankcase heater mode | $P_{CK}$ | 0.000 | kW | | | | |

| **Other items** | | | | | | | |
|---|---|---|---|---|---|---|---|
| Capacity control | variable | | | For air-to-water heat pumps: Rated air flow rate, outdoors | - | 4000 | $m^3/h$ |
| Sound power level, indoors/ outdoors | $L_{WA}$ | -/60 | dB | For water- or brine-to-water heat pumps: Rated brine or water flow rate, outdoor heat exchanger | - | N/A | $m^3/h$ |
| Annual energy consumption | $Q_{HE}$ | 4044 | kWh | | | | |
| For heat pump combination heater: | | | | | | | |
| **Declared load profile** | N/A | | | **Water heating energy efficiency** | $\eta_{wh}$ | N/A | % |
| Daily electricity consumption | $Q_{elec}$ | N/A | kWh | Daily fuel consumption | $Q_{fuel}$ | N/A | kWh |
| Annual electricity consumption | AEC | N/A | kWh | Annual fuel consumption | AFC | N/A | GJ |
| Contact details | See the back cover of the manual | | | | | | |

(*) For heat pump space heaters and heat pump combination heaters, the rated heat output Prated is equal to the design load for heating Pdesignh, and the rated heat output of a supplementary heater Psup is equal to the supplementary capacity for heating sup(Tj).
(**) If Cdh is not determined by measurement then the default degradation coefficient is Cdh = 0.9.

## Technical parameters

| | |
|---|---|
| Model(s): | 8kW(heating 3kW);8kW |
| Air-to-water heat pump: | yes |
| Water-to-water heat pump: | no |
| Brine-to-water heat pump: | no |
| Low-temperature heat pump: | no |
| Equipped with a supplementary heater: | yes(for 8kW(heating 3kW))<br>no(for 8kW) |
| Heat pump combination heater: | no |
| Declared climate condition: | average |

Parameters are declared for medium-temperature application.

| Item | Symbol | Value | Unit | Item | Symbol | Value | Unit |
|---|---|---|---|---|---|---|---|
| **Rated heat output (*)** | $P_{rated}$ | 7 | kW | **Seasonal space heating energy efficiency** | $\eta_s$ | 136 | % |
| Declared capacity for heating for part load at indoor temperature 20 °C and outdoor temperature Tj | | | | Declared coefficient of performance or primary energy ratio for part load at indoor temperature 20 °C and outdoor temperature Tj | | | |
| $T_j$ = – 7°C | $P_{dh}$ | 5.8 | kW | $T_j$ = – 7°C | $COP_d$ | 2.20 | - |
| $T_j$ = + 2°C | $P_{dh}$ | 3.7 | kW | $T_j$ = + 2°C | $COP_d$ | 3.37 | - |
| $T_j$ = + 7°C | $P_{dh}$ | 2.4 | kW | $T_j$ = + 7°C | $COP_d$ | 4.57 | - |
| $T_j$ = + 12°C | $P_{dh}$ | 1.6 | kW | $T_j$ = + 12°C | $COP_d$ | 5.87 | - |
| $T_j$ = bivalent temperature | $P_{dh}$ | 5.8 | kW | $T_j$ = bivalent temperature | $COP_d$ | 2.20 | - |
| $T_j$ = operation limit temperature | $P_{dh}$ | 5.0 | kW | $T_j$ = operation limit temperature | $COP_d$ | 1.84 | - |
| For air-to-water heat pumps: $T_j$ = – 15°C (if TOL < – 20°C) | $P_{dh}$ | N/A | kW | For air-to-water heat pumps: $T_j$ = – 15°C (if TOL < – 20°C) | $COP_d$ | N/A | - |
| Bivalent temperature | $T_{biv}$ | -7 | °C | For air-to-water heat pumps: Operation limit temperature | TOL | -10 | °C |
| Cycling interval capacity for heating | $P_{cych}$ | N/A | kW | Cycling interval efficiency | $COP_{cyc}$ | N/A | - |
| Degradation co-efficient (**) | $C_{dh}$ | 0.9 | - | Heating water operating limit temperature | WTOL | 65 | °C |
| Power consumption in modes other than active mode | | | | Supplementary heater | | | |
| Off mode | $P_{OFF}$ | 0.014 | kW | Rated heat output (**) | $P_{sup}$ | 2.0 | kW |
| Thermostat-off mode | $P_{TO}$ | 0.024 | kW | Type of energy input | Electric | | |
| Standby mode | $P_{SB}$ | 0.014 | kW | | | | |
| Crankcase heater mode | $P_{CK}$ | 0.000 | kW | | | | |

| **Other items** | | | | | | | |
|---|---|---|---|---|---|---|---|
| Capacity control | variable | | | For air-to-water heat pumps: Rated air flow rate, outdoors | - | 4000 | $m^3/h$ |
| Sound power level, indoors/ outdoors | $L_{WA}$ | -/60 | dB | For water- or brine-to-water heat pumps: Rated brine or water flow rate, outdoor heat exchanger | - | N/A | $m^3/h$ |
| Annual energy consumption | $Q_{HE}$ | 3937 | kWh | | | | |
| For heat pump combination heater: | | | | | | | |
| **Declared load profile** | N/A | | | **Water heating energy efficiency** | $\eta_{wh}$ | N/A | % |
| Daily electricity consumption | $Q_{elec}$ | N/A | kWh | Daily fuel consumption | $Q_{fuel}$ | N/A | kWh |
| Annual electricity consumption | AEC | N/A | kWh | Annual fuel consumption | AFC | N/A | GJ |
| Contact details | See the back cover of the manual | | | | | | |

(*) For heat pump space heaters and heat pump combination heaters, the rated heat output Prated is equal to the design load for heating Pdesignh, and the rated heat output of a supplementary heater Psup is equal to the supplementary capacity for heating sup(Tj).
(**) If Cdh is not determined by measurement then the default degradation coefficient is Cdh = 0.9.

## Technical parameters

| | |
|---|---|
| Model(s): | 8kW(heating 3kW);8kW |
| Air-to-water heat pump: | yes |
| Water-to-water heat pump: | no |
| Brine-to-water heat pump: | no |
| Low-temperature heat pump: | no |
| Equipped with a supplementary heater: | yes(for 8kW(heating 3kW))<br>no(for 8kW) |
| Heat pump combination heater: | no |
| Declared climate condition: | warmer |

Parameters are declared for medium-temperature application.

| Item | Symbol | Value | Unit | Item | Symbol | Value | Unit |
|---|---|---|---|---|---|---|---|
| **Rated heat output (*)** | $P_{rated}$ | 8 | kW | **Seasonal space heating energy efficiency** | $\eta_s$ | 171 | % |
| Declared capacity for heating for part load at indoor temperature 20 °C and outdoor temperature Tj | | | | Declared coefficient of performance or primary energy ratio for part load at indoor temperature 20 °C and outdoor temperature Tj | | | |
| $T_j$ = – 7°C | $P_{dh}$ | N/A | kW | $T_j$ = – 7°C | $COP_d$ | N/A | - |
| $T_j$ = + 2°C | $P_{dh}$ | 7.4 | kW | $T_j$ = + 2°C | $COP_d$ | 2.52 | - |
| $T_j$ = + 7°C | $P_{dh}$ | 4.9 | kW | $T_j$ = + 7°C | $COP_d$ | 3.60 | - |
| $T_j$ = + 12°C | $P_{dh}$ | 2.2 | kW | $T_j$ = + 12°C | $COP_d$ | 5.80 | - |
| $T_j$ = bivalent temperature | $P_{dh}$ | 4.9 | kW | $T_j$ = bivalent temperature | $COP_d$ | 3.60 | - |
| $T_j$ = operation limit temperature | $P_{dh}$ | 7.4 | kW | $T_j$ = operation limit temperature | $COP_d$ | 2.52 | - |
| For air-to-water heat pumps: $T_j$ = – 15°C (if TOL < – 20°C) | $P_{dh}$ | N/A | kW | For air-to-water heat pumps: $T_j$ = – 15°C (if TOL < – 20°C) | $COP_d$ | N/A | - |
| Bivalent temperature | $T_{biv}$ | 7 | °C | For air-to-water heat pumps: Operation limit temperature | TOL | 2 | °C |
| Cycling interval capacity for heating | $P_{cych}$ | N/A | kW | Cycling interval efficiency | $COP_{cyc}$ | N/A | - |
| Degradation co-efficient (**) | $C_{dh}$ | 0.9 | - | Heating water operating limit temperature | WTOL | 65 | °C |
| Power consumption in modes other than active mode | | | | Supplementary heater | | | |
| Off mode | $P_{OFF}$ | 0.014 | kW | Rated heat output (**) | $P_{sup}$ | 0.6 | kW |
| Thermostat-off mode | $P_{TO}$ | 0.024 | kW | Type of energy input | Electric | | |
| Standby mode | $P_{SB}$ | 0.014 | kW | | | | |
| Crankcase heater mode | $P_{CK}$ | 0.000 | kW | | | | |

| **Other items** | | | | | | | |
|---|---|---|---|---|---|---|---|
| Capacity control | variable | | | For air-to-water heat pumps: Rated air flow rate, outdoors | - | 4000 | $m^3/h$ |
| Sound power level, indoors/ outdoors | $L_{WA}$ | -/60 | dB | For water- or brine-to-water heat pumps: Rated brine or water flow rate, outdoor heat exchanger | - | N/A | $m^3/h$ |
| Annual energy consumption | $Q_{HE}$ | 2347 | kWh | | | | |
| For heat pump combination heater: | | | | | | | |
| **Declared load profile** | N/A | | | **Water heating energy efficiency** | $\eta_{wh}$ | N/A | % |
| Daily electricity consumption | $Q_{elec}$ | N/A | kWh | Daily fuel consumption | $Q_{fuel}$ | N/A | kWh |
| Annual electricity consumption | AEC | N/A | kWh | Annual fuel consumption | AFC | N/A | GJ |
| Contact details | See the back cover of the manual | | | | | | |

(*) For heat pump space heaters and heat pump combination heaters, the rated heat output Prated is equal to the design load for heating Pdesignh, and the rated heat output of a supplementary heater Psup is equal to the supplementary capacity for heating sup(Tj).
(**) If Cdh is not determined by measurement then the default degradation coefficient is Cdh = 0.9.

## Technical parameters

| | |
|---|---|
| Model(s): | 8kW(heating 3kW);8kW |
| Air-to-water heat pump: | yes |
| Water-to-water heat pump: | no |
| Brine-to-water heat pump: | no |
| Low-temperature heat pump: | no |
| Equipped with a supplementary heater: | yes(for 8kW(heating 3kW))<br>no(for 8kW) |
| Heat pump combination heater: | no |
| Declared climate condition: | colder |

Parameters are declared for medium-temperature application.

| Item | Symbol | Value | Unit | Item | Symbol | Value | Unit |
|---|---|---|---|---|---|---|---|
| **Rated heat output (*)** | $P_{rated}$ | 6 | kW | **Seasonal space heating energy efficiency** | $\eta_s$ | 115 | % |
| Declared capacity for heating for part load at indoor temperature 20 °C and outdoor temperature Tj | | | | Declared coefficient of performance or primary energy ratio for part load at indoor temperature 20 °C and outdoor temperature Tj | | | |
| $T_j$ = – 7°C | $P_{dh}$ | 3.8 | kW | $T_j$ = – 7°C | $COP_d$ | 2.48 | - |
| $T_j$ = + 2°C | $P_{dh}$ | 2.2 | kW | $T_j$ = + 2°C | $COP_d$ | 3.59 | - |
| $T_j$ = + 7°C | $P_{dh}$ | 1.4 | kW | $T_j$ = + 7°C | $COP_d$ | 4.08 | - |
| $T_j$ = + 12°C | $P_{dh}$ | 1.5 | kW | $T_j$ = + 12°C | $COP_d$ | 6.01 | - |
| $T_j$ = bivalent temperature | $P_{dh}$ | 4.8 | kW | $T_j$ = bivalent temperature | $COP_d$ | 1.87 | - |
| $T_j$ = operation limit temperature | $P_{dh}$ | 3.2 | kW | $T_j$ = operation limit temperature | $COP_d$ | 1.31 | - |
| For air-to-water heat pumps: $T_j$ = – 15°C (if TOL < – 20°C) | $P_{dh}$ | N/A | kW | For air-to-water heat pumps: $T_j$ = – 15°C (if TOL < – 20°C) | $COP_d$ | N/A | - |
| Bivalent temperature | $T_{biv}$ | -15 | °C | For air-to-water heat pumps: Operation limit temperature | TOL | -22 | °C |
| Cycling interval capacity for heating | $P_{cych}$ | N/A | kW | Cycling interval efficiency | $COP_{cyc}$ | N/A | - |
| Degradation co-efficient (**) | $C_{dh}$ | 0.9 | - | Heating water operating limit temperature | WTOL | 65 | °C |
| Power consumption in modes other than active mode | | | | Supplementary heater | | | |
| Off mode | $P_{OFF}$ | 0.014 | kW | Rated heat output (**) | $P_{sup}$ | 2.8 | kW |
| Thermostat-off mode | $P_{TO}$ | 0.024 | kW | Type of energy input | Electric | | |
| Standby mode | $P_{SB}$ | 0.014 | kW | | | | |
| Crankcase heater mode | $P_{CK}$ | 0.000 | kW | | | | |

| **Other items** | | | | | | | |
|---|---|---|---|---|---|---|---|
| Capacity control | variable | | | For air-to-water heat pumps: Rated air flow rate, outdoors | - | 4000 | $m^3/h$ |
| Sound power level, indoors/ outdoors | $L_{WA}$ | -/60 | dB | For water- or brine-to-water heat pumps: Rated brine or water flow rate, outdoor heat exchanger | - | N/A | $m^3/h$ |
| Annual energy consumption | $Q_{HE}$ | 4891 | kWh | | | | |
| For heat pump combination heater: | | | | | | | |
| **Declared load profile** | N/A | | | **Water heating energy efficiency** | $\eta_{wh}$ | N/A | % |
| Daily electricity consumption | $Q_{elec}$ | N/A | kWh | Daily fuel consumption | $Q_{fuel}$ | N/A | kWh |
| Annual electricity consumption | AEC | N/A | kWh | Annual fuel consumption | AFC | N/A | GJ |
| Contact details | See the back cover of the manual | | | | | | |

(*) For heat pump space heaters and heat pump combination heaters, the rated heat output Prated is equal to the design load for heating Pdesignh, and the rated heat output of a supplementary heater Psup is equal to the supplementary capacity for heating sup(Tj).
(**) If Cdh is not determined by measurement then the default degradation coefficient is Cdh = 0.9.

## Technical parameters

| | |
|---|---|
| Model(s): | 10kW(heating 3kW);10kW |
| Air-to-water heat pump: | yes |
| Water-to-water heat pump: | no |
| Brine-to-water heat pump: | no |
| Low-temperature heat pump: | no |
| Equipped with a supplementary heater: | yes(for 10kW(heating 3kW))<br>no(for 10kW) |
| Heat pump combination heater: | no |
| Declared climate condition: | average |

Parameters are declared for low-temperature application.

| Item | Symbol | Value | Unit | Item | Symbol | Value | Unit |
|---|---|---|---|---|---|---|---|
| **Rated heat output (*)** | $P_{rated}$ | 9 | kW | **Seasonal space heating energy efficiency** | $\eta_s$ | 199 | % |
| Declared capacity for heating for part load at indoor temperature 20 °C and outdoor temperature Tj | | | | Declared coefficient of performance or primary energy ratio for part load at indoor temperature 20 °C and outdoor temperature Tj | | | |
| $T_j$ = – 7°C | $P_{dh}$ | 8.0 | kW | $T_j$ = – 7°C | $COP_d$ | 2.99 | - |
| $T_j$ = + 2°C | $P_{dh}$ | 5.0 | kW | $T_j$ = + 2°C | $COP_d$ | 4.97 | - |
| $T_j$ = + 7°C | $P_{dh}$ | 3.1 | kW | $T_j$ = + 7°C | $COP_d$ | 6.78 | - |
| $T_j$ = + 12°C | $P_{dh}$ | 2.0 | kW | $T_j$ = + 12°C | $COP_d$ | 9.10 | - |
| $T_j$ = bivalent temperature | $P_{dh}$ | 8.0 | kW | $T_j$ = bivalent temperature | $COP_d$ | 2.99 | - |
| $T_j$ = operation limit temperature | $P_{dh}$ | 7.3 | kW | $T_j$ = operation limit temperature | $COP_d$ | 2.72 | - |
| For air-to-water heat pumps: $T_j$ = – 15°C (if TOL < – 20°C) | $P_{dh}$ | N/A | kW | For air-to-water heat pumps: $T_j$ = – 15°C (if TOL < – 20°C) | $COP_d$ | N/A | - |
| Bivalent temperature | $T_{biv}$ | -7 | °C | For air-to-water heat pumps: Operation limit temperature | TOL | -10 | °C |
| Cycling interval capacity for heating | $P_{cych}$ | N/A | kW | Cycling interval efficiency | $COP_{cyc}$ | N/A | - |
| Degradation co-efficient (**) | $C_{dh}$ | 0.9 | - | Heating water operating limit temperature | WTOL | 65 | °C |
| Power consumption in modes other than active mode | | | | Supplementary heater | | | |
| Off mode | $P_{OFF}$ | 0.014 | kW | Rated heat output (**) | $P_{sup}$ | 1.7 | kW |
| Thermostat-off mode | $P_{TO}$ | 0.024 | kW | Type of energy input | Electric | | |
| Standby mode | $P_{SB}$ | 0.014 | kW | | | | |
| Crankcase heater mode | $P_{CK}$ | 0.000 | kW | | | | |

| **Other items** | | | | | | | |
|---|---|---|---|---|---|---|---|
| Capacity control | variable | | | For air-to-water heat pumps: Rated air flow rate, outdoors | - | 4500 | $m^3/h$ |
| Sound power level, indoors/ outdoors | $L_{WA}$ | -/61 | dB | For water- or brine-to-water heat pumps: Rated brine or water flow rate, outdoor heat exchanger | - | N/A | $m^3/h$ |
| Annual energy consumption | $Q_{HE}$ | 3702 | kWh | | | | |
| For heat pump combination heater: | | | | | | | |
| **Declared load profile** | N/A | | | **Water heating energy efficiency** | $\eta_{wh}$ | N/A | % |
| Daily electricity consumption | $Q_{elec}$ | N/A | kWh | Daily fuel consumption | $Q_{fuel}$ | N/A | kWh |
| Annual electricity consumption | AEC | N/A | kWh | Annual fuel consumption | AFC | N/A | GJ |
| Contact details | See the back cover of the manual | | | | | | |

(*) For heat pump space heaters and heat pump combination heaters, the rated heat output Prated is equal to the design load for heating Pdesignh, and the rated heat output of a supplementary heater Psup is equal to the supplementary capacity for heating sup(Tj).
(**) If Cdh is not determined by measurement then the default degradation coefficient is Cdh = 0.9.

## Technical parameters

| | |
|---|---|
| Model(s): | 10kW(heating 3kW);10kW |
| Air-to-water heat pump: | yes |
| Water-to-water heat pump: | no |
| Brine-to-water heat pump: | no |
| Low-temperature heat pump: | no |
| Equipped with a supplementary heater: | yes(for 10kW(heating 3kW))<br>no(for 10kW) |
| Heat pump combination heater: | no |
| Declared climate condition: | warmer |

Parameters are declared for low-temperature application.

| Item | Symbol | Value | Unit | Item | Symbol | Value | Unit |
|---|---|---|---|---|---|---|---|
| **Rated heat output (*)** | $P_{rated}$ | 9 | kW | **Seasonal space heating energy efficiency** | $\eta_s$ | 268 | % |
| Declared capacity for heating for part load at indoor temperature 20 °C and outdoor temperature Tj | | | | Declared coefficient of performance or primary energy ratio for part load at indoor temperature 20 °C and outdoor temperature Tj | | | |
| $T_j$ = – 7°C | $P_{dh}$ | N/A | kW | $T_j$ = – 7°C | $COP_d$ | N/A | - |
| $T_j$ = + 2°C | $P_{dh}$ | 8.4 | kW | $T_j$ = + 2°C | $COP_d$ | 3.67 | - |
| $T_j$ = + 7°C | $P_{dh}$ | 5.5 | kW | $T_j$ = + 7°C | $COP_d$ | 5.99 | - |
| $T_j$ = + 12°C | $P_{dh}$ | 2.4 | kW | $T_j$ = + 12°C | $COP_d$ | 8.73 | - |
| $T_j$ = bivalent temperature | $P_{dh}$ | 5.5 | kW | $T_j$ = bivalent temperature | $COP_d$ | 5.99 | - |
| $T_j$ = operation limit temperature | $P_{dh}$ | 8.4 | kW | $T_j$ = operation limit temperature | $COP_d$ | 3.67 | - |
| For air-to-water heat pumps: $T_j$ = – 15°C (if TOL < – 20°C) | $P_{dh}$ | N/A | kW | For air-to-water heat pumps: $T_j$ = – 15°C (if TOL < – 20°C) | $COP_d$ | N/A | - |
| Bivalent temperature | $T_{biv}$ | 7 | °C | For air-to-water heat pumps: Operation limit temperature | TOL | 2 | °C |
| Cycling interval capacity for heating | $P_{cych}$ | N/A | kW | Cycling interval efficiency | $COP_{cyc}$ | N/A | - |
| Degradation co-efficient (**) | $C_{dh}$ | 0.9 | - | Heating water operating limit temperature | WTOL | 65 | °C |
| Power consumption in modes other than active mode | | | | Supplementary heater | | | |
| Off mode | $P_{OFF}$ | 0.014 | kW | Rated heat output (**) | $P_{sup}$ | 0.6 | kW |
| Thermostat-off mode | $P_{TO}$ | 0.024 | kW | Type of energy input | Electric | | |
| Standby mode | $P_{SB}$ | 0.014 | kW | | | | |
| Crankcase heater mode | $P_{CK}$ | 0.000 | kW | | | | |

| **Other items** | | | | | | | |
|---|---|---|---|---|---|---|---|
| Capacity control | variable | | | For air-to-water heat pumps: Rated air flow rate, outdoors | - | 4500 | $m^3/h$ |
| Sound power level, indoors/ outdoors | $L_{WA}$ | -/61 | dB | For water- or brine-to-water heat pumps: Rated brine or water flow rate, outdoor heat exchanger | - | N/A | $m^3/h$ |
| Annual energy consumption | $Q_{HE}$ | 1694 | kWh | | | | |
| For heat pump combination heater: | | | | | | | |
| **Declared load profile** | N/A | | | **Water heating energy efficiency** | $\eta_{wh}$ | N/A | % |
| Daily electricity consumption | $Q_{elec}$ | N/A | kWh | Daily fuel consumption | $Q_{fuel}$ | N/A | kWh |
| Annual electricity consumption | AEC | N/A | kWh | Annual fuel consumption | AFC | N/A | GJ |
| Contact details | See the back cover of the manual | | | | | | |

(*) For heat pump space heaters and heat pump combination heaters, the rated heat output Prated is equal to the design load for heating Pdesignh, and the rated heat output of a supplementary heater Psup is equal to the supplementary capacity for heating sup(Tj).
(**) If Cdh is not determined by measurement then the default degradation coefficient is Cdh = 0.9.

## Technical parameters

| | |
|---|---|
| Model(s): | 10kW(heating 3kW);10kW |
| Air-to-water heat pump: | yes |
| Water-to-water heat pump: | no |
| Brine-to-water heat pump: | no |
| Low-temperature heat pump: | no |
| Equipped with a supplementary heater: | yes(for 10kW(heating 3kW))<br>no(for 10kW) |
| Heat pump combination heater: | no |
| Declared climate condition: | colder |

Parameters are declared for low-temperature application.

| Item | Symbol | Value | Unit | Item | Symbol | Value | Unit |
|---|---|---|---|---|---|---|---|
| **Rated heat output (*)** | $P_{rated}$ | 8 | kW | **Seasonal space heating energy efficiency** | $\eta_s$ | 170 | % |
| Declared capacity for heating for part load at indoor temperature 20 °C and outdoor temperature Tj | | | | Declared coefficient of performance or primary energy ratio for part load at indoor temperature 20 °C and outdoor temperature Tj | | | |
| $T_j$ = – 7°C | $P_{dh}$ | 4.7 | kW | $T_j$ = – 7°C | $COP_d$ | 3.50 | - |
| $T_j$ = + 2°C | $P_{dh}$ | 3.0 | kW | $T_j$ = + 2°C | $COP_d$ | 5.51 | - |
| $T_j$ = + 7°C | $P_{dh}$ | 2.0 | kW | $T_j$ = + 7°C | $COP_d$ | 6.63 | - |
| $T_j$ = + 12°C | $P_{dh}$ | 1.9 | kW | $T_j$ = + 12°C | $COP_d$ | 8.58 | - |
| $T_j$ = bivalent temperature | $P_{dh}$ | 6.3 | kW | $T_j$ = bivalent temperature | $COP_d$ | 2.56 | - |
| $T_j$ = operation limit temperature | $P_{dh}$ | 4.6 | kW | $T_j$ = operation limit temperature | $COP_d$ | 1.99 | - |
| For air-to-water heat pumps: $T_j$ = – 15°C (if TOL < – 20°C) | $P_{dh}$ | N/A | kW | For air-to-water heat pumps: $T_j$ = – 15°C (if TOL < – 20°C) | $COP_d$ | N/A | - |
| Bivalent temperature | $T_{biv}$ | -15 | °C | For air-to-water heat pumps: Operation limit temperature | TOL | -22 | °C |
| Cycling interval capacity for heating | $P_{cych}$ | N/A | kW | Cycling interval efficiency | $COP_{cyc}$ | N/A | - |
| Degradation co-efficient (**) | $C_{dh}$ | 0.9 | - | Heating water operating limit temperature | WTOL | 65 | °C |
| Power consumption in modes other than active mode | | | | Supplementary heater | | | |
| Off mode | $P_{OFF}$ | 0.014 | kW | Rated heat output (**) | $P_{sup}$ | 3.4 | kW |
| Thermostat-off mode | $P_{TO}$ | 0.024 | kW | Type of energy input | Electric | | |
| Standby mode | $P_{SB}$ | 0.014 | kW | | | | |
| Crankcase heater mode | $P_{CK}$ | 0.000 | kW | | | | |

| **Other items** | | | | | | | |
|---|---|---|---|---|---|---|---|
| Capacity control | variable | | | For air-to-water heat pumps: Rated air flow rate, outdoors | - | 4500 | $m^3/h$ |
| Sound power level, indoors/ outdoors | $L_{WA}$ | -/61 | dB | For water- or brine-to-water heat pumps: Rated brine or water flow rate, outdoor heat exchanger | - | N/A | $m^3/h$ |
| Annual energy consumption | $Q_{HE}$ | 4417 | kWh | | | | |
| For heat pump combination heater: | | | | | | | |
| **Declared load profile** | N/A | | | **Water heating energy efficiency** | $\eta_{wh}$ | N/A | % |
| Daily electricity consumption | $Q_{elec}$ | N/A | kWh | Daily fuel consumption | $Q_{fuel}$ | N/A | kWh |
| Annual electricity consumption | AEC | N/A | kWh | Annual fuel consumption | AFC | N/A | GJ |
| Contact details | See the back cover of the manual | | | | | | |

(*) For heat pump space heaters and heat pump combination heaters, the rated heat output Prated is equal to the design load for heating Pdesignh, and the rated heat output of a supplementary heater Psup is equal to the supplementary capacity for heating sup(Tj).
(**) If Cdh is not determined by measurement then the default degradation coefficient is Cdh = 0.9.

## Technical parameters

| | |
|---|---|
| Model(s): | 10kW(heating 3kW);10kW |
| Air-to-water heat pump: | yes |
| Water-to-water heat pump: | no |
| Brine-to-water heat pump: | no |
| Low-temperature heat pump: | no |
| Equipped with a supplementary heater: | yes(for 10kW(heating 3kW))<br>no(for 10kW) |
| Heat pump combination heater: | no |
| Declared climate condition: | average |

Parameters are declared for medium-temperature application.

| Item | Symbol | Value | Unit | Item | Symbol | Value | Unit |
|---|---|---|---|---|---|---|---|
| **Rated heat output (*)** | $P_{rated}$ | 8 | kW | **Seasonal space heating energy efficiency** | $\eta_s$ | 138 | % |
| Declared capacity for heating for part load at indoor temperature 20 °C and outdoor temperature Tj | | | | Declared coefficient of performance or primary energy ratio for part load at indoor temperature 20 °C and outdoor temperature Tj | | | |
| $T_j$ = – 7°C | $P_{dh}$ | 6.8 | kW | $T_j$ = – 7°C | $COP_d$ | 2.10 | - |
| $T_j$ = + 2°C | $P_{dh}$ | 4.2 | kW | $T_j$ = + 2°C | $COP_d$ | 3.44 | - |
| $T_j$ = + 7°C | $P_{dh}$ | 2.6 | kW | $T_j$ = + 7°C | $COP_d$ | 4.74 | - |
| $T_j$ = + 12°C | $P_{dh}$ | 1.8 | kW | $T_j$ = + 12°C | $COP_d$ | 6.22 | - |
| $T_j$ = bivalent temperature | $P_{dh}$ | 6.8 | kW | $T_j$ = bivalent temperature | $COP_d$ | 2.10 | - |
| $T_j$ = operation limit temperature | $P_{dh}$ | 5.2 | kW | $T_j$ = operation limit temperature | $COP_d$ | 1.83 | - |
| For air-to-water heat pumps: $T_j$ = – 15°C (if TOL < – 20°C) | $P_{dh}$ | N/A | kW | For air-to-water heat pumps: $T_j$ = – 15°C (if TOL < – 20°C) | $COP_d$ | N/A | - |
| Bivalent temperature | $T_{biv}$ | -7 | °C | For air-to-water heat pumps: Operation limit temperature | TOL | -10 | °C |
| Cycling interval capacity for heating | $P_{cych}$ | N/A | kW | Cycling interval efficiency | $COP_{cyc}$ | N/A | - |
| Degradation co-efficient (**) | $C_{dh}$ | 0.9 | - | Heating water operating limit temperature | WTOL | 65 | °C |
| Power consumption in modes other than active mode | | | | Supplementary heater | | | |
| Off mode | $P_{OFF}$ | 0.014 | kW | Rated heat output (**) | $P_{sup}$ | 2.8 | kW |
| Thermostat-off mode | $P_{TO}$ | 0.024 | kW | Type of energy input | Electric | | |
| Standby mode | $P_{SB}$ | 0.014 | kW | | | | |
| Crankcase heater mode | $P_{CK}$ | 0.000 | kW | | | | |

| **Other items** | | | | | | | |
|---|---|---|---|---|---|---|---|
| Capacity control | variable | | | For air-to-water heat pumps: Rated air flow rate, outdoors | - | 4500 | $m^3/h$ |
| Sound power level, indoors/ outdoors | $L_{WA}$ | -/61 | dB | For water- or brine-to-water heat pumps: Rated brine or water flow rate, outdoor heat exchanger | - | N/A | $m^3/h$ |
| Annual energy consumption | $Q_{HE}$ | 4537 | kWh | | | | |
| For heat pump combination heater: | | | | | | | |
| **Declared load profile** | N/A | | | **Water heating energy efficiency** | $\eta_{wh}$ | N/A | % |
| Daily electricity consumption | $Q_{elec}$ | N/A | kWh | Daily fuel consumption | $Q_{fuel}$ | N/A | kWh |
| Annual electricity consumption | AEC | N/A | kWh | Annual fuel consumption | AFC | N/A | GJ |
| Contact details | See the back cover of the manual | | | | | | |

(*) For heat pump space heaters and heat pump combination heaters, the rated heat output Prated is equal to the design load for heating Pdesignh, and the rated heat output of a supplementary heater Psup is equal to the supplementary capacity for heating sup(Tj).
(**) If Cdh is not determined by measurement then the default degradation coefficient is Cdh = 0.9.

## Technical parameters

| | |
|---|---|
| Model(s): | 10kW(heating 3kW);10kW |
| Air-to-water heat pump: | yes |
| Water-to-water heat pump: | no |
| Brine-to-water heat pump: | no |
| Low-temperature heat pump: | no |
| Equipped with a supplementary heater: | yes(for 10kW(heating 3kW))<br>no(for 10kW) |
| Heat pump combination heater: | no |
| Declared climate condition: | warmer |

Parameters are declared for medium-temperature application.

| Item | Symbol | Value | Unit | Item | Symbol | Value | Unit |
|---|---|---|---|---|---|---|---|
| **Rated heat output (*)** | $P_{rated}$ | 8 | kW | **Seasonal space heating energy efficiency** | $\eta_s$ | 179 | % |
| Declared capacity for heating for part load at indoor temperature 20 °C and outdoor temperature Tj | | | | Declared coefficient of performance or primary energy ratio for part load at indoor temperature 20 °C and outdoor temperature Tj | | | |
| $T_j$ = – 7°C | $P_{dh}$ | N/A | kW | $T_j$ = – 7°C | $COP_d$ | N/A | - |
| $T_j$ = + 2°C | $P_{dh}$ | 7.6 | kW | $T_j$ = + 2°C | $COP_d$ | 2.27 | - |
| $T_j$ = + 7°C | $P_{dh}$ | 5.2 | kW | $T_j$ = + 7°C | $COP_d$ | 3.92 | - |
| $T_j$ = + 12°C | $P_{dh}$ | 2.5 | kW | $T_j$ = + 12°C | $COP_d$ | 6.17 | - |
| $T_j$ = bivalent temperature | $P_{dh}$ | 5.2 | kW | $T_j$ = bivalent temperature | $COP_d$ | 3.92 | - |
| $T_j$ = operation limit temperature | $P_{dh}$ | 7.6 | kW | $T_j$ = operation limit temperature | $COP_d$ | 2.27 | - |
| For air-to-water heat pumps: $T_j$ = – 15°C (if TOL < – 20°C) | $P_{dh}$ | N/A | kW | For air-to-water heat pumps: $T_j$ = – 15°C (if TOL < – 20°C) | $COP_d$ | N/A | - |
| Bivalent temperature | $T_{biv}$ | 7 | °C | For air-to-water heat pumps: Operation limit temperature | TOL | 2 | °C |
| Cycling interval capacity for heating | $P_{cych}$ | N/A | kW | Cycling interval efficiency | $COP_{cyc}$ | N/A | - |
| Degradation co-efficient (**) | $C_{dh}$ | 0.9 | - | Heating water operating limit temperature | WTOL | 65 | °C |
| Power consumption in modes other than active mode | | | | Supplementary heater | | | |
| Off mode | $P_{OFF}$ | 0.014 | kW | Rated heat output (**) | $P_{sup}$ | 0.4 | kW |
| Thermostat-off mode | $P_{TO}$ | 0.024 | kW | Type of energy input | Electric | | |
| Standby mode | $P_{SB}$ | 0.014 | kW | | | | |
| Crankcase heater mode | $P_{CK}$ | 0.000 | kW | | | | |

| **Other items** | | | | | | | |
|---|---|---|---|---|---|---|---|
| Capacity control | variable | | | For air-to-water heat pumps: Rated air flow rate, outdoors | - | 4500 | $m^3/h$ |
| Sound power level, indoors/ outdoors | $L_{WA}$ | -/61 | dB | For water- or brine-to-water heat pumps: Rated brine or water flow rate, outdoor heat exchanger | - | N/A | $m^3/h$ |
| Annual energy consumption | $Q_{HE}$ | 2353 | kWh | | | | |
| For heat pump combination heater: | | | | | | | |
| **Declared load profile** | N/A | | | **Water heating energy efficiency** | $\eta_{wh}$ | N/A | % |
| Daily electricity consumption | $Q_{elec}$ | N/A | kWh | Daily fuel consumption | $Q_{fuel}$ | N/A | kWh |
| Annual electricity consumption | AEC | N/A | kWh | Annual fuel consumption | AFC | N/A | GJ |
| Contact details | See the back cover of the manual | | | | | | |

(*) For heat pump space heaters and heat pump combination heaters, the rated heat output Prated is equal to the design load for heating Pdesignh, and the rated heat output of a supplementary heater Psup is equal to the supplementary capacity for heating sup(Tj).
(**) If Cdh is not determined by measurement then the default degradation coefficient is Cdh = 0.9.

## Technical parameters

| | |
|---|---|
| Model(s): | 10kW(heating 3kW);10kW |
| Air-to-water heat pump: | yes |
| Water-to-water heat pump: | no |
| Brine-to-water heat pump: | no |
| Low-temperature heat pump: | no |
| Equipped with a supplementary heater: | yes(for 10kW(heating 3kW))<br>no(for 10kW) |
| Heat pump combination heater: | no |
| Declared climate condition: | colder |

Parameters are declared for medium-temperature application.

| Item | Symbol | Value | Unit | Item | Symbol | Value | Unit |
|---|---|---|---|---|---|---|---|
| **Rated heat output (*)** | $P_{rated}$ | 7 | kW | **Seasonal space heating energy efficiency** | $\eta_s$ | 116 | % |
| Declared capacity for heating for part load at indoor temperature 20 °C and outdoor temperature Tj | | | | Declared coefficient of performance or primary energy ratio for part load at indoor temperature 20 °C and outdoor temperature Tj | | | |
| $T_j$ = – 7°C | $P_{dh}$ | 4.1 | kW | $T_j$ = – 7°C | $COP_d$ | 2.53 | - |
| $T_j$ = + 2°C | $P_{dh}$ | 2.6 | kW | $T_j$ = + 2°C | $COP_d$ | 3.51 | - |
| $T_j$ = + 7°C | $P_{dh}$ | 1.7 | kW | $T_j$ = + 7°C | $COP_d$ | 4.52 | - |
| $T_j$ = + 12°C | $P_{dh}$ | 1.7 | kW | $T_j$ = + 12°C | $COP_d$ | 6.51 | - |
| $T_j$ = bivalent temperature | $P_{dh}$ | 5.5 | kW | $T_j$ = bivalent temperature | $COP_d$ | 1.92 | - |
| $T_j$ = operation limit temperature | $P_{dh}$ | 2.8 | kW | $T_j$ = operation limit temperature | $COP_d$ | 1.24 | - |
| For air-to-water heat pumps: $T_j$ = – 15°C (if TOL < – 20°C) | $P_{dh}$ | N/A | kW | For air-to-water heat pumps: $T_j$ = – 15°C (if TOL < – 20°C) | $COP_d$ | N/A | - |
| Bivalent temperature | $T_{biv}$ | -15 | °C | For air-to-water heat pumps: Operation limit temperature | TOL | -22 | °C |
| Cycling interval capacity for heating | $P_{cych}$ | N/A | kW | Cycling interval efficiency | $COP_{cyc}$ | N/A | - |
| Degradation co-efficient (**) | $C_{dh}$ | 0.9 | - | Heating water operating limit temperature | WTOL | 65 | °C |
| Power consumption in modes other than active mode | | | | Supplementary heater | | | |
| Off mode | $P_{OFF}$ | 0.014 | kW | Rated heat output (**) | $P_{sup}$ | 4.2 | kW |
| Thermostat-off mode | $P_{TO}$ | 0.024 | kW | Type of energy input | Electric | | |
| Standby mode | $P_{SB}$ | 0.014 | kW | | | | |
| Crankcase heater mode | $P_{CK}$ | 0.000 | kW | | | | |

| **Other items** | | | | | | | |
|---|---|---|---|---|---|---|---|
| Capacity control | variable | | | For air-to-water heat pumps: Rated air flow rate, outdoors | - | 4500 | $m^3/h$ |
| Sound power level, indoors/ outdoors | $L_{WA}$ | -/61 | dB | For water- or brine-to-water heat pumps: Rated brine or water flow rate, outdoor heat exchanger | - | N/A | $m^3/h$ |
| Annual energy consumption | $Q_{HE}$ | 5613 | kWh | | | | |
| For heat pump combination heater: | | | | | | | |
| **Declared load profile** | N/A | | | **Water heating energy efficiency** | $\eta_{wh}$ | N/A | % |
| Daily electricity consumption | $Q_{elec}$ | N/A | kWh | Daily fuel consumption | $Q_{fuel}$ | N/A | kWh |
| Annual electricity consumption | AEC | N/A | kWh | Annual fuel consumption | AFC | N/A | GJ |
| Contact details | See the back cover of the manual | | | | | | |

(*) For heat pump space heaters and heat pump combination heaters, the rated heat output Prated is equal to the design load for heating Pdesignh, and the rated heat output of a supplementary heater Psup is equal to the supplementary capacity for heating sup(Tj).
(**) If Cdh is not determined by measurement then the default degradation coefficient is Cdh = 0.9.

## Technical parameters

| | |
|---|---|
| Model(s): | 12kW(heating 3kW);12kW |
| Air-to-water heat pump: | yes |
| Water-to-water heat pump: | no |
| Brine-to-water heat pump: | no |
| Low-temperature heat pump: | no |
| Equipped with a supplementary heater: | yes(for 12kW(heating 3kW))<br>no(for 12kW) |
| Heat pump combination heater: | no |
| Declared climate condition: | average |

Parameters are declared for low-temperature application.

| Item | Symbol | Value | Unit | Item | Symbol | Value | Unit |
|---|---|---|---|---|---|---|---|
| **Rated heat output (*)** | $P_{rated}$ | 12 | kW | **Seasonal space heating energy efficiency** | $\eta_s$ | 188 | % |
| Declared capacity for heating for part load at indoor temperature 20 °C and outdoor temperature $T_j$ | | | | Declared coefficient of performance or primary energy ratio for part load at indoor temperature 20 °C and outdoor temperature Tj | | | |
| $T_j$ = – 7°C | $P_{dh}$ | 10,7 | kW | $T_j$ = – 7°C | $COP_d$ | 2.90 | - |
| $T_j$ = + 2°C | $P_{dh}$ | 7.0 | kW | $T_j$ = + 2°C | $COP_d$ | 4.53 | - |
| $T_j$ = + 7°C | $P_{dh}$ | 4.6 | kW | $T_j$ = + 7°C | $COP_d$ | 6.66 | - |
| $T_j$ = + 12°C | $P_{dh}$ | 4.2 | kW | $T_j$ = + 12°C | $COP_d$ | 8.92 | - |
| $T_j$ = bivalent temperature | $P_{dh}$ | 10.7 | kW | $T_j$ = bivalent temperature | $COP_d$ | 2.90 | - |
| $T_j$ = operation limit temperature | $P_{dh}$ | 11.4 | kW | $T_j$ = operation limit temperature | $COP_d$ | 2.63 | - |
| For air-to-water heat pumps: $T_j$ = – 15°C (if TOL < – 20°C) | $P_{dh}$ | N/A | kW | For air-to-water heat pumps: $T_j$ = – 15°C (if TOL < – 20°C) | $COP_d$ | N/A | - |
| Bivalent temperature | $T_{biv}$ | -7 | °C | For air-to-water heat pumps: Operation limit temperature | TOL | -10 | °C |
| Cycling interval capacity for heating | $P_{cych}$ | N/A | kW | Cycling interval efficiency | $COP_{cyc}$ | N/A | - |
| Degradation co-efficient (**) | $C_{dh}$ | 0.9 | - | Heating water operating limit temperature | WTOL | 65 | °C |
| Power consumption in modes other than active mode | | | | Supplementary heater | | | |
| Off mode | $P_{OFF}$ | 0.014 | kW | Rated heat output (**) | $P_{sup}$ | 0.6 | kW |
| Thermostat-off mode | $P_{TO}$ | 0.024 | kW | Type of energy input | Electric | | |
| Standby mode | $P_{SB}$ | 0.014 | kW | | | | |
| Crankcase heater mode | $P_{CK}$ | 0.000 | kW | | | | |

| **Other items** | | | | | | | |
|---|---|---|---|---|---|---|---|
| Capacity control | variable | | | For air-to-water heat pumps: Rated air flow rate, outdoors | - | 5000 | $m^3/h$ |
| Sound power level, indoors/ outdoors | $L_{WA}$ | -/64 | dB | For water- or brine-to-water heat pumps: Rated brine or water flow rate, outdoor heat exchanger | - | N/A | $m^3/h$ |
| Annual energy consumption | $Q_{HE}$ | 5261 | kWh | | | | |
| For heat pump combination heater: | | | | | | | |
| **Declared load profile** | N/A | | | **Water heating energy efficiency** | $\eta_{wh}$ | N/A | % |
| Daily electricity consumption | $Q_{elec}$ | N/A | kWh | Daily fuel consumption | $Q_{fuel}$ | N/A | kWh |
| Annual electricity consumption | AEC | N/A | kWh | Annual fuel consumption | AFC | N/A | GJ |
| Contact details | See the back cover of the manual | | | | | | |

(*) For heat pump space heaters and heat pump combination heaters, the rated heat output Prated is equal to the design load for heating Pdesignh, and the rated heat output of a supplementary heater Psup is equal to the supplementary capacity for heating sup(Tj).
(**) If Cdh is not determined by measurement then the default degradation coefficient is Cdh = 0.9.

## Technical parameters

| | |
|---|---|
| Model(s): | 12kW(heating 3kW);12kW |
| Air-to-water heat pump: | yes |
| Water-to-water heat pump: | no |
| Brine-to-water heat pump: | no |
| Low-temperature heat pump: | no |
| Equipped with a supplementary heater: | yes(for 12kW(heating 3kW))<br>no(for 12kW) |
| Heat pump combination heater: | no |
| Declared climate condition: | warmer |

Parameters are declared for low-temperature application.

| Item | Symbol | Value | Unit | Item | Symbol | Value | Unit |
|---|---|---|---|---|---|---|---|
| **Rated heat output (*)** | $P_{rated}$ | 11 | kW | **Seasonal space heating energy efficiency** | $\eta_s$ | 253 | % |
| Declared capacity for heating for part load at indoor temperature 20 °C and outdoor temperature $T_j$ | | | | Declared coefficient of performance or primary energy ratio for part load at indoor temperature 20 °C and outdoor temperature Tj | | | |
| $T_j$ = – 7°C | $P_{dh}$ | N/A | kW | $T_j$ = – 7°C | $COP_d$ | N/A | - |
| $T_j$ = + 2°C | $P_{dh}$ | 11.1 | kW | $T_j$ = + 2°C | $COP_d$ | 3.62 | - |
| $T_j$ = + 7°C | $P_{dh}$ | 7.1 | kW | $T_j$ = + 7°C | $COP_d$ | 5.64 | - |
| $T_j$ = + 12°C | $P_{dh}$ | 4.7 | kW | $T_j$ = + 12°C | $COP_d$ | 8.33 | - |
| $T_j$ = bivalent temperature | $P_{dh}$ | 7.1 | kW | $T_j$ = bivalent temperature | $COP_d$ | 5.64 | - |
| $T_j$ = operation limit temperature | $P_{dh}$ | 11.1 | kW | $T_j$ = operation limit temperature | $COP_d$ | 3.62 | - |
| For air-to-water heat pumps: $T_j$ = – 15°C (if TOL < – 20°C) | $P_{dh}$ | N/A | kW | For air-to-water heat pumps: $T_j$ = – 15°C (if TOL < – 20°C) | $COP_d$ | N/A | - |
| Bivalent temperature | $T_{biv}$ | 7 | °C | For air-to-water heat pumps: Operation limit temperature | TOL | 2 | °C |
| Cycling interval capacity for heating | $P_{cych}$ | N/A | kW | Cycling interval efficiency | $COP_{cyc}$ | N/A | - |
| Degradation co-efficient (**) | $C_{dh}$ | 0.9 | - | Heating water operating limit temperature | WTOL | 65 | °C |
| Power consumption in modes other than active mode | | | | Supplementary heater | | | |
| Off mode | $P_{OFF}$ | 0.014 | kW | Rated heat output (**) | $P_{sup}$ | 0.0 | kW |
| Thermostat-off mode | $P_{TO}$ | 0.024 | kW | Type of energy input | Electric | | |
| Standby mode | $P_{SB}$ | 0.014 | kW | | | | |
| Crankcase heater mode | $P_{CK}$ | 0.000 | kW | | | | |

**Other items**

| | | | | | | | |
|---|---|---|---|---|---|---|---|
| Capacity control | variable | | | For air-to-water heat pumps: Rated air flow rate, outdoors | - | 5000 | $m^3/h$ |
| Sound power level, indoors/ outdoors | $L_{WA}$ | -/64 | dB | For water- or brine-to-water heat pumps: Rated brine or water flow rate, outdoor heat exchanger | - | N/A | $m^3/h$ |
| Annual energy consumption | $Q_{HE}$ | 2326 | kWh | | | | |

For heat pump combination heater:

| | | | | | | | |
|---|---|---|---|---|---|---|---|
| **Declared load profile** | N/A | | | **Water heating energy efficiency** | $\eta_{wh}$ | N/A | % |
| Daily electricity consumption | $Q_{elec}$ | N/A | kWh | Daily fuel consumption | $Q_{fuel}$ | N/A | kWh |
| Annual electricity consumption | AEC | N/A | kWh | Annual fuel consumption | AFC | N/A | GJ |
| Contact details | See the back cover of the manual | | | | | | |

(*) For heat pump space heaters and heat pump combination heaters, the rated heat output Prated is equal to the design load for heating Pdesignh, and the rated heat output of a supplementary heater Psup is equal to the supplementary capacity for heating sup(Tj).
(**) If Cdh is not determined by measurement then the default degradation coefficient is Cdh = 0.9.

## Technical parameters

| | |
|---|---|
| Model(s): | 12kW(heating 3kW);12kW |
| Air-to-water heat pump: | yes |
| Water-to-water heat pump: | no |
| Brine-to-water heat pump: | no |
| Low-temperature heat pump: | no |
| Equipped with a supplementary heater: | yes(for 12kW(heating 3kW))<br>no(for 12kW) |
| Heat pump combination heater: | no |
| Declared climate condition: | colder |

Parameters are declared for low-temperature application.

| Item | Symbol | Value | Unit | Item | Symbol | Value | Unit |
|---|---|---|---|---|---|---|---|
| **Rated heat output (*)** | $P_{rated}$ | 11 | kW | **Seasonal space heating energy efficiency** | $\eta_s$ | 163 | % |
| Declared capacity for heating for part load at indoor temperature 20 °C and outdoor temperature $T_j$ | | | | Declared coefficient of performance or primary energy ratio for part load at indoor temperature 20 °C and outdoor temperature Tj | | | |
| $T_j$ = – 7°C | $P_{dh}$ | 7.2 | kW | $T_j$ = – 7°C | $COP_d$ | 3.51 | - |
| $T_j$ = + 2°C | $P_{dh}$ | 4.1 | kW | $T_j$ = + 2°C | $COP_d$ | 5.05 | - |
| $T_j$ = + 7°C | $P_{dh}$ | 3.2 | kW | $T_j$ = + 7°C | $COP_d$ | 6.18 | - |
| $T_j$ = + 12°C | $P_{dh}$ | 3.6 | kW | $T_j$ = + 12°C | $COP_d$ | 8.19 | - |
| $T_j$ = bivalent temperature | $P_{dh}$ | 9.3 | kW | $T_j$ = bivalent temperature | $COP_d$ | 2.59 | - |
| $T_j$ = operation limit temperature | $P_{dh}$ | 7.1 | kW | $T_j$ = operation limit temperature | $COP_d$ | 2.08 | - |
| For air-to-water heat pumps: $T_j$ = – 15°C (if TOL < – 20°C) | $P_{dh}$ | N/A | kW | For air-to-water heat pumps: $T_j$ = – 15°C (if TOL < – 20°C) | $COP_d$ | N/A | - |
| Bivalent temperature | $T_{biv}$ | -15 | °C | For air-to-water heat pumps: Operation limit temperature | TOL | -22 | °C |
| Cycling interval capacity for heating | $P_{cych}$ | N/A | kW | Cycling interval efficiency | $COP_{cyc}$ | N/A | - |
| Degradation co-efficient (**) | $C_{dh}$ | 0.9 | - | Heating water operating limit temperature | WTOL | 65 | °C |
| Power consumption in modes other than active mode | | | | Supplementary heater | | | |
| Off mode | $P_{OFF}$ | 0.014 | kW | Rated heat output (**) | $P_{sup}$ | 3.9 | kW |
| Thermostat-off mode | $P_{TO}$ | 0.024 | kW | Type of energy input | Electric | | |
| Standby mode | $P_{SB}$ | 0.014 | kW | | | | |
| Crankcase heater mode | $P_{CK}$ | 0.000 | kW | | | | |

| **Other items** | | | | | | | |
|---|---|---|---|---|---|---|---|
| Capacity control | variable | | | For air-to-water heat pumps: Rated air flow rate, outdoors | - | 5000 | $m^3/h$ |
| Sound power level, indoors/ outdoors | $L_{WA}$ | -/64 | dB | For water- or brine-to-water heat pumps: Rated brine or water flow rate, outdoor heat exchanger | - | N/A | $m^3/h$ |
| Annual energy consumption | $Q_{HE}$ | 6746 | kWh | | | | |
| For heat pump combination heater: | | | | | | | |
| **Declared load profile** | N/A | | | **Water heating energy efficiency** | $\eta_{wh}$ | N/A | % |
| Daily electricity consumption | $Q_{elec}$ | N/A | kWh | Daily fuel consumption | $Q_{fuel}$ | N/A | kWh |
| Annual electricity consumption | AEC | N/A | kWh | Annual fuel consumption | AFC | N/A | GJ |
| Contact details | See the back cover of the manual | | | | | | |

(*) For heat pump space heaters and heat pump combination heaters, the rated heat output Prated is equal to the design load for heating Pdesignh, and the rated heat output of a supplementary heater Psup is equal to the supplementary capacity for heating sup(Tj).
(**) If Cdh is not determined by measurement then the default degradation coefficient is Cdh = 0.9.

## Technical parameters

| | |
|---|---|
| Model(s): | 12kW(heating 3kW);12kW |
| Air-to-water heat pump: | yes |
| Water-to-water heat pump: | no |
| Brine-to-water heat pump: | no |
| Low-temperature heat pump: | no |
| Equipped with a supplementary heater: | yes(for 12kW(heating 3kW))<br>no(for 12kW) |
| Heat pump combination heater: | no |
| Declared climate condition: | average |

Parameters are declared for medium-temperature application.

| Item | Symbol | Value | Unit | Item | Symbol | Value | Unit |
|---|---|---|---|---|---|---|---|
| **Rated heat output (*)** | $P_{rated}$ | 12 | kW | **Seasonal space heating energy efficiency** | $\eta_s$ | 136 | % |
| Declared capacity for heating for part load at indoor temperature 20 °C and outdoor temperature $T_j$ | | | | Declared coefficient of performance or primary energy ratio for part load at indoor temperature 20 °C and outdoor temperature Tj | | | |
| $T_j$ = – 7°C | $P_{dh}$ | 10.7 | kW | $T_j$ = – 7°C | $COP_d$ | 2.12 | - |
| $T_j$ = + 2°C | $P_{dh}$ | 6.6 | kW | $T_j$ = + 2°C | $COP_d$ | 3.29 | - |
| $T_j$ = + 7°C | $P_{dh}$ | 4.4 | kW | $T_j$ = + 7°C | $COP_d$ | 4.74 | - |
| $T_j$ = + 12°C | $P_{dh}$ | 4.0 | kW | $T_j$ = + 12°C | $COP_d$ | 7.28 | - |
| $T_j$ = bivalent temperature | $P_{dh}$ | 10.7 | kW | $T_j$ = bivalent temperature | $COP_d$ | 2.12 | - |
| $T_j$ = operation limit temperature | $P_{dh}$ | 9.9 | kW | $T_j$ = operation limit temperature | $COP_d$ | 1.82 | - |
| For air-to-water heat pumps: $T_j$ = – 15°C (if TOL < – 20°C) | $P_{dh}$ | N/A | kW | For air-to-water heat pumps: $T_j$ = – 15°C (if TOL < – 20°C) | $COP_d$ | N/A | - |
| Bivalent temperature | $T_{biv}$ | -7 | °C | For air-to-water heat pumps: Operation limit temperature | TOL | -10 | °C |
| Cycling interval capacity for heating | $P_{cych}$ | N/A | kW | Cycling interval efficiency | $COP_{cyc}$ | N/A | - |
| Degradation co-efficient (**) | $C_{dh}$ | 0.9 | - | Heating water operating limit temperature | WTOL | 65 | °C |
| Power consumption in modes other than active mode | | | | Supplementary heater | | | |
| Off mode | $P_{OFF}$ | 0.014 | kW | Rated heat output (**) | $P_{sup}$ | 2.1 | kW |
| Thermostat-off mode | $P_{TO}$ | 0.024 | kW | Type of energy input | Electric | | |
| Standby mode | $P_{SB}$ | 0.014 | kW | | | | |
| Crankcase heater mode | $P_{CK}$ | 0.000 | kW | | | | |

| **Other items** | | | | | | | |
|---|---|---|---|---|---|---|---|
| Capacity control | variable | | | For air-to-water heat pumps: Rated air flow rate, outdoors | - | 5000 | $m^3/h$ |
| Sound power level, indoors/ outdoors | $L_{WA}$ | -/64 | dB | For water- or brine-to-water heat pumps: Rated brine or water flow rate, outdoor heat exchanger | - | N/A | $m^3/h$ |
| Annual energy consumption | $Q_{HE}$ | 7224 | kWh | | | | |
| For heat pump combination heater: | | | | | | | |
| **Declared load profile** | N/A | | | **Water heating energy efficiency** | $\eta_{wh}$ | N/A | % |
| Daily electricity consumption | $Q_{elec}$ | N/A | kWh | Daily fuel consumption | $Q_{fuel}$ | N/A | kWh |
| Annual electricity consumption | AEC | N/A | kWh | Annual fuel consumption | AFC | N/A | GJ |
| Contact details | See the back cover of the manual | | | | | | |

(*) For heat pump space heaters and heat pump combination heaters, the rated heat output Prated is equal to the design load for heating Pdesignh, and the rated heat output of a supplementary heater Psup is equal to the supplementary capacity for heating sup(Tj).
(**) If Cdh is not determined by measurement then the default degradation coefficient is Cdh = 0.9.

## Technical parameters

| | |
|---|---|
| Model(s): | 12kW(heating 3kW);12kW |
| Air-to-water heat pump: | yes |
| Water-to-water heat pump: | no |
| Brine-to-water heat pump: | no |
| Low-temperature heat pump: | no |
| Equipped with a supplementary heater: | yes(for 12kW(heating 3kW))<br>no(for 12kW) |
| Heat pump combination heater: | no |
| Declared climate condition: | warmer |

Parameters are declared for medium-temperature application.

| Item | Symbol | Value | Unit | Item | Symbol | Value | Unit |
|---|---|---|---|---|---|---|---|
| **Rated heat output (*)** | $P_{rated}$ | 12 | kW | **Seasonal space heating energy efficiency** | $\eta_s$ | 174 | % |
| Declared capacity for heating for part load at indoor temperature 20 °C and outdoor temperature $T_j$ | | | | Declared coefficient of performance or primary energy ratio for part load at indoor temperature 20 °C and outdoor temperature Tj | | | |
| $T_j$ = – 7°C | $P_{dh}$ | N/A | kW | $T_j$ = – 7°C | $COP_d$ | N/A | - |
| $T_j$ = + 2°C | $P_{dh}$ | 12.1 | kW | $T_j$ = + 2°C | $COP_d$ | 2.27 | - |
| $T_j$ = + 7°C | $P_{dh}$ | 8.0 | kW | $T_j$ = + 7°C | $COP_d$ | 3.76 | - |
| $T_j$ = + 12°C | $P_{dh}$ | 4.3 | kW | $T_j$ = + 12°C | $COP_d$ | 5.95 | - |
| $T_j$ = bivalent temperature | $P_{dh}$ | 8.0 | kW | $T_j$ = bivalent temperature | $COP_d$ | 3.76 | - |
| $T_j$ = operation limit temperature | $P_{dh}$ | 12.1 | kW | $T_j$ = operation limit temperature | $COP_d$ | 2.27 | - |
| For air-to-water heat pumps: $T_j$ = – 15°C (if TOL < – 20°C) | $P_{dh}$ | N/A | kW | For air-to-water heat pumps: $T_j$ = – 15°C (if TOL < – 20°C) | $COP_d$ | N/A | - |
| Bivalent temperature | $T_{biv}$ | 7 | °C | For air-to-water heat pumps: Operation limit temperature | TOL | 2 | °C |
| Cycling interval capacity for heating | $P_{cych}$ | N/A | kW | Cycling interval efficiency | $COP_{cyc}$ | N/A | - |
| Degradation co-efficient (**) | $C_{dh}$ | 0.9 | - | Heating water operating limit temperature | WTOL | 65 | °C |
| Power consumption in modes other than active mode | | | | Supplementary heater | | | |
| Off mode | $P_{OFF}$ | 0.014 | kW | Rated heat output (**) | $P_{sup}$ | 0.0 | kW |
| Thermostat-off mode | $P_{TO}$ | 0.024 | kW | Type of energy input | Electric | | |
| Standby mode | $P_{SB}$ | 0.014 | kW | | | | |
| Crankcase heater mode | $P_{CK}$ | 0.000 | kW | | | | |

**Other items**

| | | | | | | | |
|---|---|---|---|---|---|---|---|
| Capacity control | variable | | | For air-to-water heat pumps: Rated air flow rate, outdoors | - | 5000 | $m^3/h$ |
| Sound power level, indoors/ outdoors | $L_{WA}$ | -/64 | dB | For water- or brine-to-water heat pumps: Rated brine or water flow rate, outdoor heat exchanger | - | N/A | $m^3/h$ |
| Annual energy consumption | $Q_{HE}$ | 3761 | kWh | | | | |
| For heat pump combination heater: | | | | | | | |
| **Declared load profile** | N/A | | | **Water heating energy efficiency** | $\eta_{wh}$ | N/A | % |
| Daily electricity consumption | $Q_{elec}$ | N/A | kWh | Daily fuel consumption | $Q_{fuel}$ | N/A | kWh |
| Annual electricity consumption | AEC | N/A | kWh | Annual fuel consumption | AFC | N/A | GJ |
| Contact details | See the back cover of the manual | | | | | | |

(*) For heat pump space heaters and heat pump combination heaters, the rated heat output Prated is equal to the design load for heating Pdesignh, and the rated heat output of a supplementary heater Psup is equal to the supplementary capacity for heating sup(Tj).
(**) If Cdh is not determined by measurement then the default degradation coefficient is Cdh = 0.9.

## Technical parameters

| | |
|---|---|
| Model(s): | 12kW(heating 3kW);12kW |
| Air-to-water heat pump: | yes |
| Water-to-water heat pump: | no |
| Brine-to-water heat pump: | no |
| Low-temperature heat pump: | no |
| Equipped with a supplementary heater: | yes(for 12kW(heating 3kW))<br>no(for 12kW) |
| Heat pump combination heater: | no |
| Declared climate condition: | colder |

Parameters are declared for medium-temperature application.

| Item | Symbol | Value | Unit | Item | Symbol | Value | Unit |
|---|---|---|---|---|---|---|---|
| **Rated heat output (*)** | $P_{rated}$ | 10 | kW | **Seasonal space heating energy efficiency** | $\eta_s$ | 119 | % |
| Declared capacity for heating for part load at indoor temperature 20 °C and outdoor temperature $T_j$ | | | | Declared coefficient of performance or primary energy ratio for part load at indoor temperature 20 °C and outdoor temperature Tj | | | |
| $T_j$ = – 7°C | $P_{dh}$ | 6.7 | kW | $T_j$ = – 7°C | $COP_d$ | 2.58 | - |
| $T_j$ = + 2°C | $P_{dh}$ | 4.0 | kW | $T_j$ = + 2°C | $COP_d$ | 3.68 | - |
| $T_j$ = + 7°C | $P_{dh}$ | 2.9 | kW | $T_j$ = + 7°C | $COP_d$ | 4.57 | - |
| $T_j$ = + 12°C | $P_{dh}$ | 3.3 | kW | $T_j$ = + 12°C | $COP_d$ | 6.59 | - |
| $T_j$ = bivalent temperature | $P_{dh}$ | 8.5 | kW | $T_j$ = bivalent temperature | $COP_d$ | 1.84 | - |
| $T_j$ = operation limit temperature | $P_{dh}$ | 4.6 | kW | $T_j$ = operation limit temperature | $COP_d$ | 1.21 | - |
| For air-to-water heat pumps: $T_j$ = – 15°C (if TOL < – 20°C) | $P_{dh}$ | N/A | kW | For air-to-water heat pumps: $T_j$ = – 15°C (if TOL < – 20°C) | $COP_d$ | N/A | - |
| Bivalent temperature | $T_{biv}$ | -15 | °C | For air-to-water heat pumps: Operation limit temperature | TOL | -22 | °C |
| Cycling interval capacity for heating | $P_{cych}$ | N/A | kW | Cycling interval efficiency | $COP_{cyc}$ | N/A | - |
| Degradation co-efficient (**) | $C_{dh}$ | 0.9 | - | Heating water operating limit temperature | WTOL | 65 | °C |
| Power consumption in modes other than active mode | | | | Supplementary heater | | | |
| Off mode | $P_{OFF}$ | 0.014 | kW | Rated heat output (**) | $P_{sup}$ | 5.4 | kW |
| Thermostat-off mode | $P_{TO}$ | 0.024 | kW | Type of energy input | Electric | | |
| Standby mode | $P_{SB}$ | 0.014 | kW | | | | |
| Crankcase heater mode | $P_{CK}$ | 0.000 | kW | | | | |

| **Other items** | | | | | | | |
|---|---|---|---|---|---|---|---|
| Capacity control | variable | | | For air-to-water heat pumps: Rated air flow rate, outdoors | - | 5000 | $m^3/h$ |
| Sound power level, indoors/ outdoors | $L_{WA}$ | -/64 | dB | For water- or brine-to-water heat pumps: Rated brine or water flow rate, outdoor heat exchanger | - | N/A | $m^3/h$ |
| Annual energy consumption | $Q_{HE}$ | 8470 | kWh | | | | |
| For heat pump combination heater: | | | | | | | |
| **Declared load profile** | N/A | | | **Water heating energy efficiency** | $\eta_{wh}$ | N/A | % |
| Daily electricity consumption | $Q_{elec}$ | N/A | kWh | Daily fuel consumption | $Q_{fuel}$ | N/A | kWh |
| Annual electricity consumption | AEC | N/A | kWh | Annual fuel consumption | AFC | N/A | GJ |
| Contact details | See the back cover of the manual | | | | | | |

(*) For heat pump space heaters and heat pump combination heaters, the rated heat output Prated is equal to the design load for heating Pdesignh, and the rated heat output of a supplementary heater Psup is equal to the supplementary capacity for heating sup(Tj).
(**) If Cdh is not determined by measurement then the default degradation coefficient is Cdh = 0.9.

## Technical parameters

| | |
|---|---|
| Model(s): | 14kW(heating 3kW);14kW |
| Air-to-water heat pump: | yes |
| Water-to-water heat pump: | no |
| Brine-to-water heat pump: | no |
| Low-temperature heat pump: | no |
| Equipped with a supplementary heater: | yes(for 14kW(heating 3kW))<br>no(for 14kW) |
| Heat pump combination heater: | no |
| Declared climate condition: | average |

Parameters are declared for low-temperature application.

| Item | Symbol | Value | Unit | Item | Symbol | Value | Unit |
|---|---|---|---|---|---|---|---|
| **Rated heat output (*)** | $P_{rated}$ | 14 | kW | **Seasonal space heating energy efficiency** | $\eta_s$ | 182 | % |
| Declared capacity for heating for part load at indoor temperature 20 °C and outdoor temperature $T_j$ | | | | Declared capacity for heating for part load at indoor temperature 20 °C and outdoor temperature $T_j$ | | | |
| $T_j$ = – 7°C | $P_{dh}$ | 12.4 | kW | $T_j$ = – 7°C | $COP_d$ | 2.80 | - |
| $T_j$ = + 2°C | $P_{dh}$ | 7.5 | kW | $T_j$ = + 2°C | $COP_d$ | 4.38 | - |
| $T_j$ = + 7°C | $P_{dh}$ | 5.2 | kW | $T_j$ = + 7°C | $COP_d$ | 6.53 | - |
| $T_j$ = + 12°C | $P_{dh}$ | 4.5 | kW | $T_j$ = + 12°C | $COP_d$ | 8.58 | - |
| $T_j$ = bivalent temperature | $P_{dh}$ | 12.4 | kW | $T_j$ = bivalent temperature | $COP_d$ | 2.80 | - |
| $T_j$ = operation limit temperature | $P_{dh}$ | 12.8 | kW | $T_j$ = operation limit temperature | $COP_d$ | 2.51 | - |
| For air-to-water heat pumps: $T_j$ = – 15°C (if TOL < – 20°C) | $P_{dh}$ | N/A | kW | For air-to-water heat pumps: $T_j$ = – 15°C (if TOL < – 20°C) | $COP_d$ | N/A | - |
| Bivalent temperature | $T_{biv}$ | -7 | °C | For air-to-water heat pumps: Operation limit temperature | TOL | -10 | °C |
| Cycling interval capacity for heating | $P_{cych}$ | N/A | kW | Cycling interval efficiency | $COP_{cyc}$ | N/A | - |
| Degradation co-efficient (**) | $C_{dh}$ | 0.9 | - | Heating water operating limit temperature | WTOL | 65 | °C |
| Power consumption in modes other than active mode | | | | Supplementary heater | | | |
| Off mode | $P_{OFF}$ | 0.014 | kW | Rated heat output (**) | $P_{sup}$ | 1.2 | kW |
| Thermostat-off mode | $P_{TO}$ | 0.024 | kW | Type of energy input | Electric | | |
| Standby mode | $P_{SB}$ | 0.014 | kW | | | | |
| Crankcase heater mode | $P_{CK}$ | 0.000 | kW | | | | |

| **Other items** | | | | | | | |
|---|---|---|---|---|---|---|---|
| Capacity control | variable | | | For air-to-water heat pumps: Rated air flow rate, outdoors | - | 5500 | $m^3/h$ |
| Sound power level, indoors/ outdoors | $L_{WA}$ | -/66 | dB | For water- or brine-to-water heat pumps: Rated brine or water flow rate, outdoor heat exchanger | - | N/A | $m^3/h$ |
| Annual energy consumption | $Q_{HE}$ | 6238 | kWh | | | | |
| For heat pump combination heater: | | | | | | | |
| **Declared load profile** | N/A | | | **Water heating energy efficiency** | $\eta_{wh}$ | N/A | % |
| Daily electricity consumption | $Q_{elec}$ | N/A | kWh | Daily fuel consumption | $Q_{fuel}$ | N/A | kWh |
| Annual electricity consumption | AEC | N/A | kWh | Annual fuel consumption | AFC | N/A | GJ |
| Contact details | See the back cover of the manual | | | | | | |

(*) For heat pump space heaters and heat pump combination heaters, the rated heat output Prated is equal to the design load for heating Pdesignh, and the rated heat output of a supplementary heater Psup is equal to the supplementary capacity for heating sup(Tj).
(**) If Cdh is not determined by measurement then the default degradation coefficient is Cdh = 0.9.

## Technical parameters

| | |
|---|---|
| Model(s): | 14kW(heating 3kW);14kW |
| Air-to-water heat pump: | yes |
| Water-to-water heat pump: | no |
| Brine-to-water heat pump: | no |
| Low-temperature heat pump: | no |
| Equipped with a supplementary heater: | yes(for 14kW(heating 3kW))<br>no(for 14kW) |
| Heat pump combination heater: | no |
| Declared climate condition: | warmer |

Parameters are declared for low-temperature application.

| Item | Symbol | Value | Unit | Item | Symbol | Value | Unit |
|---|---|---|---|---|---|---|---|
| **Rated heat output (*)** | $P_{rated}$ | 12 | kW | **Seasonal space heating energy efficiency** | $\eta_s$ | 248 | % |
| Declared capacity for heating for part load at indoor temperature 20 °C and outdoor temperature $T_j$ | | | | Declared capacity for heating for part load at indoor temperature 20 °C and outdoor temperature $T_j$ | | | |
| $T_j$ = – 7°C | $P_{dh}$ | N/A | kW | $T_j$ = – 7°C | $COP_d$ | N/A | - |
| $T_j$ = + 2°C | $P_{dh}$ | 12.3 | kW | $T_j$ = + 2°C | $COP_d$ | 3.40 | - |
| $T_j$ = + 7°C | $P_{dh}$ | 8.0 | kW | $T_j$ = + 7°C | $COP_d$ | 5.60 | - |
| $T_j$ = + 12°C | $P_{dh}$ | 4.2 | kW | $T_j$ = + 12°C | $COP_d$ | 7.94 | - |
| $T_j$ = bivalent temperature | $P_{dh}$ | 8.0 | kW | $T_j$ = bivalent temperature | $COP_d$ | 5.60 | - |
| $T_j$ = operation limit temperature | $P_{dh}$ | 12.3 | kW | $T_j$ = operation limit temperature | $COP_d$ | 3.40 | - |
| For air-to-water heat pumps: $T_j$ = – 15°C (if TOL < – 20°C) | $P_{dh}$ | N/A | kW | For air-to-water heat pumps: $T_j$ = – 15°C (if TOL < – 20°C) | $COP_d$ | N/A | - |
| Bivalent temperature | $T_{biv}$ | 7 | °C | For air-to-water heat pumps: Operation limit temperature | TOL | 2 | °C |
| Cycling interval capacity for heating | $P_{cych}$ | N/A | kW | Cycling interval efficiency | $COP_{cyc}$ | N/A | - |
| Degradation co-efficient (**) | $C_{dh}$ | 0.9 | - | Heating water operating limit temperature | WTOL | 65 | °C |
| Power consumption in modes other than active mode | | | | Supplementary heater | | | |
| Off mode | $P_{OFF}$ | 0.014 | kW | Rated heat output (**) | $P_{sup}$ | 0.0 | kW |
| Thermostat-off mode | $P_{TO}$ | 0.024 | kW | Type of energy input | Electric | | |
| Standby mode | $P_{SB}$ | 0.014 | kW | | | | |
| Crankcase heater mode | $P_{CK}$ | 0.000 | kW | | | | |

| **Other items** | | | | | | | |
|---|---|---|---|---|---|---|---|
| Capacity control | variable | | | For air-to-water heat pumps: Rated air flow rate, outdoors | - | 5500 | $m^3/h$ |
| Sound power level, indoors/ outdoors | $L_{WA}$ | -/66 | dB | For water- or brine-to-water heat pumps: Rated brine or water flow rate, outdoor heat exchanger | - | N/A | $m^3/h$ |
| Annual energy consumption | $Q_{HE}$ | 2638 | kWh | | | | |
| For heat pump combination heater: | | | | | | | |
| **Declared load profile** | N/A | | | **Water heating energy efficiency** | $\eta_{wh}$ | N/A | % |
| Daily electricity consumption | $Q_{elec}$ | N/A | kWh | Daily fuel consumption | $Q_{fuel}$ | N/A | kWh |
| Annual electricity consumption | AEC | N/A | kWh | Annual fuel consumption | AFC | N/A | GJ |
| Contact details | See the back cover of the manual | | | | | | |

(*) For heat pump space heaters and heat pump combination heaters, the rated heat output Prated is equal to the design load for heating Pdesignh, and the rated heat output of a supplementary heater Psup is equal to the supplementary capacity for heating sup(Tj).
(**) If Cdh is not determined by measurement then the default degradation coefficient is Cdh = 0.9.

## Technical parameters

| | |
|---|---|
| Model(s): | 14kW(heating 3kW);14kW |
| Air-to-water heat pump: | yes |
| Water-to-water heat pump: | no |
| Brine-to-water heat pump: | no |
| Low-temperature heat pump: | no |
| Equipped with a supplementary heater: | yes(for 14kW(heating 3kW))<br>no(for 14kW) |
| Heat pump combination heater: | no |
| Declared climate condition: | colder |

Parameters are declared for low-temperature application.

| Item | Symbol | Value | Unit | Item | Symbol | Value | Unit |
|---|---|---|---|---|---|---|---|
| **Rated heat output (*)** | $P_{rated}$ | 13 | kW | **Seasonal space heating energy efficiency** | $\eta_s$ | 156 | % |
| Declared capacity for heating for part load at indoor temperature 20 °C and outdoor temperature $T_j$ | | | | Declared capacity for heating for part load at indoor temperature 20 °C and outdoor temperature $T_j$ | | | |
| $T_j$ = – 7°C | $P_{dh}$ | 8.2 | kW | $T_j$ = – 7°C | $COP_d$ | 3.35 | - |
| $T_j$ = + 2°C | $P_{dh}$ | 4.6 | kW | $T_j$ = + 2°C | $COP_d$ | 4.72 | - |
| $T_j$ = + 7°C | $P_{dh}$ | 3.4 | kW | $T_j$ = + 7°C | $COP_d$ | 6.10 | - |
| $T_j$ = + 12°C | $P_{dh}$ | 3.8 | kW | $T_j$ = + 12°C | $COP_d$ | 8.00 | - |
| $T_j$ = bivalent temperature | $P_{dh}$ | 10.6 | kW | $T_j$ = bivalent temperature | $COP_d$ | 2.55 | - |
| $T_j$ = operation limit temperature | $P_{dh}$ | 7.9 | kW | $T_j$ = operation limit temperature | $COP_d$ | 2.10 | - |
| For air-to-water heat pumps: $T_j$ = – 15°C (if TOL < – 20°C) | $P_{dh}$ | N/A | kW | For air-to-water heat pumps: $T_j$ = – 15°C (if TOL < – 20°C) | $COP_d$ | N/A | - |
| Bivalent temperature | $T_{biv}$ | -15 | °C | For air-to-water heat pumps: Operation limit temperature | TOL | -22 | °C |
| Cycling interval capacity for heating | $P_{cych}$ | N/A | kW | Cycling interval efficiency | $COP_{cyc}$ | N/A | - |
| Degradation co-efficient (**) | $C_{dh}$ | 0.9 | - | Heating water operating limit temperature | WTOL | 65 | °C |
| Power consumption in modes other than active mode | | | | Supplementary heater | | | |
| Off mode | $P_{OFF}$ | 0.014 | kW | Rated heat output (**) | $P_{sup}$ | 5.1 | kW |
| Thermostat-off mode | $P_{TO}$ | 0.024 | kW | Type of energy input | Electric | | |
| Standby mode | $P_{SB}$ | 0.014 | kW | | | | |
| Crankcase heater mode | $P_{CK}$ | 0.000 | kW | | | | |

| **Other items** | | | | | | | |
|---|---|---|---|---|---|---|---|
| Capacity control | variable | | | For air-to-water heat pumps: Rated air flow rate, outdoors | - | 5500 | $m^3/h$ |
| Sound power level, indoors/ outdoors | $L_{WA}$ | -/66 | dB | For water- or brine-to-water heat pumps: Rated brine or water flow rate, outdoor heat exchanger | - | N/A | $m^3/h$ |
| Annual energy consumption | $Q_{HE}$ | 8111 | kWh | | | | |
| For heat pump combination heater: | | | | | | | |
| **Declared load profile** | N/A | | | **Water heating energy efficiency** | $\eta_{wh}$ | N/A | % |
| Daily electricity consumption | $Q_{elec}$ | N/A | kWh | Daily fuel consumption | $Q_{fuel}$ | N/A | kWh |
| Annual electricity consumption | AEC | N/A | kWh | Annual fuel consumption | AFC | N/A | GJ |
| Contact details | See the back cover of the manual | | | | | | |

(*) For heat pump space heaters and heat pump combination heaters, the rated heat output Prated is equal to the design load for heating Pdesignh, and the rated heat output of a supplementary heater Psup is equal to the supplementary capacity for heating sup(Tj).
(**) If Cdh is not determined by measurement then the default degradation coefficient is Cdh = 0.9.

## Technical parameters

| | |
|---|---|
| Model(s): | 14kW(heating 3kW);14kW |
| Air-to-water heat pump: | yes |
| Water-to-water heat pump: | no |
| Brine-to-water heat pump: | no |
| Low-temperature heat pump: | no |
| Equipped with a supplementary heater: | yes(for 14kW(heating 3kW))<br>no(for 14kW) |
| Heat pump combination heater: | no |
| Declared climate condition: | average |

Parameters are declared for medium-temperature application.

| Item | Symbol | Value | Unit | Item | Symbol | Value | Unit |
|---|---|---|---|---|---|---|---|
| **Rated heat output (*)** | $P_{rated}$ | 12 | kW | **Seasonal space heating energy efficiency** | $\eta_s$ | 134 | % |
| Declared capacity for heating for part load at indoor temperature 20 °C and outdoor temperature $T_j$ | | | | Declared capacity for heating for part load at indoor temperature 20 °C and outdoor temperature $T_j$ | | | |
| $T_j$ = – 7°C | $P_{dh}$ | 10.9 | kW | $T_j$ = – 7°C | $COP_d$ | 1.99 | - |
| $T_j$ = + 2°C | $P_{dh}$ | 6.9 | kW | $T_j$ = + 2°C | $COP_d$ | 3.26 | - |
| $T_j$ = + 7°C | $P_{dh}$ | 4.5 | kW | $T_j$ = + 7°C | $COP_d$ | 4.79 | - |
| $T_j$ = + 12°C | $P_{dh}$ | 4.0 | kW | $T_j$ = + 12°C | $COP_d$ | 7.25 | - |
| $T_j$ = bivalent temperature | $P_{dh}$ | 10.9 | kW | $T_j$ = bivalent temperature | $COP_d$ | 1.99 | - |
| $T_j$ = operation limit temperature | $P_{dh}$ | 10.3 | kW | $T_j$ = operation limit temperature | $COP_d$ | 1.81 | - |
| For air-to-water heat pumps: $T_j$ = – 15°C (if TOL < – 20°C) | $P_{dh}$ | N/A | kW | For air-to-water heat pumps: $T_j$ = – 15°C (if TOL < – 20°C) | $COP_d$ | N/A | - |
| Bivalent temperature | $T_{biv}$ | -7 | °C | For air-to-water heat pumps: Operation limit temperature | TOL | -10 | °C |
| Cycling interval capacity for heating | $P_{cych}$ | N/A | kW | Cycling interval efficiency | $COP_{cyc}$ | N/A | - |
| Degradation co-efficient (**) | $C_{dh}$ | 0.9 | - | Heating water operating limit temperature | WTOL | 65 | °C |
| Power consumption in modes other than active mode | | | | Supplementary heater | | | |
| Off mode | $P_{OFF}$ | 0.014 | kW | Rated heat output (**) | $P_{sup}$ | 1.7 | kW |
| Thermostat-off mode | $P_{TO}$ | 0.024 | kW | Type of energy input | Electric | | |
| Standby mode | $P_{SB}$ | 0.014 | kW | | | | |
| Crankcase heater mode | $P_{CK}$ | 0.000 | kW | | | | |

| **Other items** | | | | | | | |
|---|---|---|---|---|---|---|---|
| Capacity control | variable | | | For air-to-water heat pumps: Rated air flow rate, outdoors | - | 5500 | $m^3/h$ |
| Sound power level, indoors/ outdoors | $L_{WA}$ | -/66 | dB | For water- or brine-to-water heat pumps: Rated brine or water flow rate, outdoor heat exchanger | - | N/A | $m^3/h$ |
| Annual energy consumption | $Q_{HE}$ | 7427 | kWh | | | | |
| For heat pump combination heater: | | | | | | | |
| **Declared load profile** | N/A | | | **Water heating energy efficiency** | $\eta_{wh}$ | N/A | % |
| Daily electricity consumption | $Q_{elec}$ | N/A | kWh | Daily fuel consumption | $Q_{fuel}$ | N/A | kWh |
| Annual electricity consumption | AEC | N/A | kWh | Annual fuel consumption | AFC | N/A | GJ |
| Contact details | See the back cover of the manual | | | | | | |

(*) For heat pump space heaters and heat pump combination heaters, the rated heat output Prated is equal to the design load for heating Pdesignh, and the rated heat output of a supplementary heater Psup is equal to the supplementary capacity for heating sup(Tj).
(**) If Cdh is not determined by measurement then the default degradation coefficient is Cdh = 0.9.

## Technical parameters

| | |
|---|---|
| Model(s): | 14kW(heating 3kW);14kW |
| Air-to-water heat pump: | yes |
| Water-to-water heat pump: | no |
| Brine-to-water heat pump: | no |
| Low-temperature heat pump: | no |
| Equipped with a supplementary heater: | yes(for 14kW(heating 3kW))<br>no(for 14kW) |
| Heat pump combination heater: | no |
| Declared climate condition: | warmer |

Parameters are declared for medium-temperature application.

| Item | Symbol | Value | Unit | Item | Symbol | Value | Unit |
|---|---|---|---|---|---|---|---|
| **Rated heat output (*)** | $P_{rated}$ | 14 | kW | **Seasonal space heating energy efficiency** | $\eta_s$ | 170 | % |
| Declared capacity for heating for part load at indoor temperature 20 °C and outdoor temperature $T_j$ | | | | Declared capacity for heating for part load at indoor temperature 20 °C and outdoor temperature $T_j$ | | | |
| $T_j$ = – 7°C | $P_{dh}$ | N/A | kW | $T_j$ = – 7°C | $COP_d$ | N/A | - |
| $T_j$ = + 2°C | $P_{dh}$ | 13.1 | kW | $T_j$ = + 2°C | $COP_d$ | 2.25 | - |
| $T_j$ = + 7°C | $P_{dh}$ | 9.0 | kW | $T_j$ = + 7°C | $COP_d$ | 3.61 | - |
| $T_j$ = + 12°C | $P_{dh}$ | 4.1 | kW | $T_j$ = + 12°C | $COP_d$ | 5.94 | - |
| $T_j$ = bivalent temperature | $P_{dh}$ | 9.0 | kW | $T_j$ = bivalent temperature | $COP_d$ | 3.61 | - |
| $T_j$ = operation limit temperature | $P_{dh}$ | 13.1 | kW | $T_j$ = operation limit temperature | $COP_d$ | 2.25 | - |
| For air-to-water heat pumps: $T_j$ = – 15°C (if TOL < – 20°C) | $P_{dh}$ | N/A | kW | For air-to-water heat pumps: $T_j$ = – 15°C (if TOL < – 20°C) | $COP_d$ | N/A | - |
| Bivalent temperature | $T_{biv}$ | 7 | °C | For air-to-water heat pumps: Operation limit temperature | TOL | 2 | °C |
| Cycling interval capacity for heating | $P_{cych}$ | N/A | kW | Cycling interval efficiency | $COP_{cyc}$ | N/A | - |
| Degradation co-efficient (**) | $C_{dh}$ | 0.9 | - | Heating water operating limit temperature | WTOL | 65 | °C |
| Power consumption in modes other than active mode | | | | Supplementary heater | | | |
| Off mode | $P_{OFF}$ | 0.014 | kW | Rated heat output (**) | $P_{sup}$ | 0.9 | kW |
| Thermostat-off mode | $P_{TO}$ | 0.024 | kW | Type of energy input | Electric | | |
| Standby mode | $P_{SB}$ | 0.014 | kW | | | | |
| Crankcase heater mode | $P_{CK}$ | 0.000 | kW | | | | |

| **Other items** | | | | | | | |
|---|---|---|---|---|---|---|---|
| Capacity control | variable | | | For air-to-water heat pumps: Rated air flow rate, outdoors | - | 5500 | $m^3/h$ |
| Sound power level, indoors/ outdoors | $L_{WA}$ | -/66 | dB | For water- or brine-to-water heat pumps: Rated brine or water flow rate, outdoor heat exchanger | - | N/A | $m^3/h$ |
| Annual energy consumption | $Q_{HE}$ | 4323 | kWh | | | | |
| For heat pump combination heater: | | | | | | | |
| **Declared load profile** | N/A | | | **Water heating energy efficiency** | $\eta_{wh}$ | N/A | % |
| Daily electricity consumption | $Q_{elec}$ | N/A | kWh | Daily fuel consumption | $Q_{fuel}$ | N/A | kWh |
| Annual electricity consumption | AEC | N/A | kWh | Annual fuel consumption | AFC | N/A | GJ |
| Contact details | See the back cover of the manual | | | | | | |

(*) For heat pump space heaters and heat pump combination heaters, the rated heat output Prated is equal to the design load for heating Pdesignh, and the rated heat output of a supplementary heater Psup is equal to the supplementary capacity for heating sup(Tj).
(**) If Cdh is not determined by measurement then the default degradation coefficient is Cdh = 0.9.

## Technical parameters

| | |
|---|---|
| Model(s): | 14kW(heating 3kW);14kW |
| Air-to-water heat pump: | yes |
| Water-to-water heat pump: | no |
| Brine-to-water heat pump: | no |
| Low-temperature heat pump: | no |
| Equipped with a supplementary heater: | yes(for 14kW(heating 3kW))<br>no(for 14kW) |
| Heat pump combination heater: | no |
| Declared climate condition: | colder |

Parameters are declared for medium-temperature application.

| Item | Symbol | Value | Unit | Item | Symbol | Value | Unit |
|---|---|---|---|---|---|---|---|
| **Rated heat output (*)** | $P_{rated}$ | 11 | kW | **Seasonal space heating energy efficiency** | $\eta_s$ | 117 | % |
| Declared capacity for heating for part load at indoor temperature 20 °C and outdoor temperature $T_j$ | | | | Declared capacity for heating for part load at indoor temperature 20 °C and outdoor temperature $T_j$ | | | |
| $T_j$ = – 7°C | $P_{dh}$ | 7.2 | kW | $T_j$ = – 7°C | $COP_d$ | 2.56 | - |
| $T_j$ = + 2°C | $P_{dh}$ | 4.2 | kW | $T_j$ = + 2°C | $COP_d$ | 3.62 | - |
| $T_j$ = + 7°C | $P_{dh}$ | 3.1 | kW | $T_j$ = + 7°C | $COP_d$ | 4.77 | - |
| $T_j$ = + 12°C | $P_{dh}$ | 3.6 | kW | $T_j$ = + 12°C | $COP_d$ | 6.40 | - |
| $T_j$ = bivalent temperature | $P_{dh}$ | 8.9 | kW | $T_j$ = bivalent temperature | $COP_d$ | 1.82 | - |
| $T_j$ = operation limit temperature | $P_{dh}$ | 4.4 | kW | $T_j$ = operation limit temperature | $COP_d$ | 1.16 | - |
| For air-to-water heat pumps: $T_j$ = – 15°C (if TOL < – 20°C) | $P_{dh}$ | N/A | kW | For air-to-water heat pumps: $T_j$ = – 15°C (if TOL < – 20°C) | $COP_d$ | N/A | - |
| Bivalent temperature | $T_{biv}$ | -15 | °C | For air-to-water heat pumps: Operation limit temperature | TOL | -22 | °C |
| Cycling interval capacity for heating | $P_{cych}$ | N/A | kW | Cycling interval efficiency | $COP_{cyc}$ | N/A | - |
| Degradation co-efficient (**) | $C_{dh}$ | 0.9 | - | Heating water operating limit temperature | WTOL | 65 | °C |
| Power consumption in modes other than active mode | | | | Supplementary heater | | | |
| Off mode | $P_{OFF}$ | 0.014 | kW | Rated heat output (**) | $P_{sup}$ | 6.6 | kW |
| Thermostat-off mode | $P_{TO}$ | 0.024 | kW | Type of energy input | Electric | | |
| Standby mode | $P_{SB}$ | 0.014 | kW | | | | |
| Crankcase heater mode | $P_{CK}$ | 0.000 | kW | | | | |

| **Other items** | | | | | | | |
|---|---|---|---|---|---|---|---|
| Capacity control | variable | | | For air-to-water heat pumps: Rated air flow rate, outdoors | - | 5500 | $m^3/h$ |
| Sound power level, indoors/ outdoors | $L_{WA}$ | -/66 | dB | For water- or brine-to-water heat pumps: Rated brine or water flow rate, outdoor heat exchanger | - | N/A | $m^3/h$ |
| Annual energy consumption | $Q_{HE}$ | 8975 | kWh | | | | |
| For heat pump combination heater: | | | | | | | |
| **Declared load profile** | N/A | | | **Water heating energy efficiency** | $\eta_{wh}$ | N/A | % |
| Daily electricity consumption | $Q_{elec}$ | N/A | kWh | Daily fuel consumption | $Q_{fuel}$ | N/A | kWh |
| Annual electricity consumption | AEC | N/A | kWh | Annual fuel consumption | AFC | N/A | GJ |
| Contact details | See the back cover of the manual | | | | | | |

(*) For heat pump space heaters and heat pump combination heaters, the rated heat output Prated is equal to the design load for heating Pdesignh, and the rated heat output of a supplementary heater Psup is equal to the supplementary capacity for heating sup(Tj).
(**) If Cdh is not determined by measurement then the default degradation coefficient is Cdh = 0.9.

## Technical parameters

| | |
|---|---|
| Model(s): | 16kW(heating 3kW);16kW |
| Air-to-water heat pump: | yes |
| Water-to-water heat pump: | no |
| Brine-to-water heat pump: | no |
| Low-temperature heat pump: | no |
| Equipped with a supplementary heater: | yes(for 16kW(heating 3kW))<br>no(for 16kW) |
| Heat pump combination heater: | no |
| Declared climate condition: | average |

Parameters are declared for low-temperature application.

| Item | Symbol | Value | Unit | Item | Symbol | Value | Unit |
|---|---|---|---|---|---|---|---|
| **Rated heat output (*)** | $P_{rated}$ | 15 | kW | **Seasonal space heating energy efficiency** | $\eta_s$ | 179 | % |
| Declared capacity for heating for part load at indoor temperature 20 °C and outdoor temperature $T_j$ | | | | Declared capacity for heating for part load at indoor temperature 20 °C and outdoor temperature $T_j$ | | | |
| $T_j$ = – 7°C | $P_{dh}$ | 13.4 | kW | $T_j$ = – 7°C | $COP_d$ | 2.66 | - |
| $T_j$ = + 2°C | $P_{dh}$ | 8.0 | kW | $T_j$ = + 2°C | $COP_d$ | 4.33 | - |
| $T_j$ = + 7°C | $P_{dh}$ | 5.4 | kW | $T_j$ = + 7°C | $COP_d$ | 6.48 | - |
| $T_j$ = + 12°C | $P_{dh}$ | 4.6 | kW | $T_j$ = + 12°C | $COP_d$ | 8.96 | - |
| $T_j$ = bivalent temperature | $P_{dh}$ | 13.4 | kW | $T_j$ = bivalent temperature | $COP_d$ | 2.66 | - |
| $T_j$ = operation limit temperature | $P_{dh}$ | 13.4 | kW | $T_j$ = operation limit temperature | $COP_d$ | 2.46 | - |
| For air-to-water heat pumps: $T_j$ = – 15°C (if TOL < – 20°C) | $P_{dh}$ | N/A | kW | For air-to-water heat pumps: $T_j$ = – 15°C (if TOL < – 20°C) | $COP_d$ | N/A | - |
| Bivalent temperature | $T_{biv}$ | -7 | °C | For air-to-water heat pumps: Operation limit temperature | TOL | -10 | °C |
| Cycling interval capacity for heating | $P_{cych}$ | N/A | kW | Cycling interval efficiency | $COP_{cyc}$ | N/A | - |
| Degradation co-efficient (**) | $C_{dh}$ | 0.9 | - | Heating water operating limit temperature | WTOL | 65 | °C |
| Power consumption in modes other than active mode | | | | Supplementary heater | | | |
| Off mode | $P_{OFF}$ | 0.014 | kW | Rated heat output (**) | $P_{sup}$ | 1.6 | kW |
| Thermostat-off mode | $P_{TO}$ | 0.024 | kW | Type of energy input | Electric | | |
| Standby mode | $P_{SB}$ | 0.014 | kW | | | | |
| Crankcase heater mode | $P_{CK}$ | 0.000 | kW | | | | |

| **Other items** | | | | | | | |
|---|---|---|---|---|---|---|---|
| Capacity control | variable | | | For air-to-water heat pumps: Rated air flow rate, outdoors | - | 6000 | $m^3/h$ |
| Sound power level, indoors/ outdoors | $L_{WA}$ | -/68 | dB | For water- or brine-to-water heat pumps: Rated brine or water flow rate, outdoor heat exchanger | - | N/A | $m^3/h$ |
| Annual energy consumption | $Q_{HE}$ | 6863 | kWh | | | | |
| For heat pump combination heater: | | | | | | | |
| **Declared load profile** | N/A | | | **Water heating energy efficiency** | $\eta_{wh}$ | N/A | % |
| Daily electricity consumption | $Q_{elec}$ | N/A | kWh | Daily fuel consumption | $Q_{fuel}$ | N/A | kWh |
| Annual electricity consumption | AEC | N/A | kWh | Annual fuel consumption | AFC | N/A | GJ |
| Contact details | See the back cover of the manual | | | | | | |

(*) For heat pump space heaters and heat pump combination heaters, the rated heat output Prated is equal to the design load for heating Pdesignh, and the rated heat output of a supplementary heater Psup is equal to the supplementary capacity for heating sup(Tj).
(**) If Cdh is not determined by measurement then the default degradation coefficient is Cdh = 0.9.

## Technical parameters

| | |
|---|---|
| Model(s): | 16kW(heating 3kW);16kW |
| Air-to-water heat pump: | yes |
| Water-to-water heat pump: | no |
| Brine-to-water heat pump: | no |
| Low-temperature heat pump: | no |
| Equipped with a supplementary heater: | yes(for 16kW(heating 3kW))<br>no(for 16kW) |
| Heat pump combination heater: | no |
| Declared climate condition: | warmer |

Parameters are declared for low-temperature application.

| Item | Symbol | Value | Unit | Item | Symbol | Value | Unit |
|---|---|---|---|---|---|---|---|
| **Rated heat output (*)** | $P_{rated}$ | 13 | kW | **Seasonal space heating energy efficiency** | $\eta_s$ | 239 | % |
| Declared capacity for heating for part load at indoor temperature 20 °C and outdoor temperature $T_j$ | | | | Declared capacity for heating for part load at indoor temperature 20 °C and outdoor temperature $T_j$ | | | |
| $T_j$ = – 7°C | $P_{dh}$ | N/A | kW | $T_j$ = – 7°C | $COP_d$ | N/A | - |
| $T_j$ = + 2°C | $P_{dh}$ | 13.3 | kW | $T_j$ = + 2°C | $COP_d$ | 3.33 | - |
| $T_j$ = + 7°C | $P_{dh}$ | 8.5 | kW | $T_j$ = + 7°C | $COP_d$ | 5.19 | - |
| $T_j$ = + 12°C | $P_{dh}$ | 4.8 | kW | $T_j$ = + 12°C | $COP_d$ | 7.95 | - |
| $T_j$ = bivalent temperature | $P_{dh}$ | 8.5 | kW | $T_j$ = bivalent temperature | $COP_d$ | 5.19 | - |
| $T_j$ = operation limit temperature | $P_{dh}$ | 13.3 | kW | $T_j$ = operation limit temperature | $COP_d$ | 3.33 | - |
| For air-to-water heat pumps: $T_j$ = – 15°C (if TOL < – 20°C) | $P_{dh}$ | N/A | kW | For air-to-water heat pumps: $T_j$ = – 15°C (if TOL < – 20°C) | $COP_d$ | N/A | - |
| Bivalent temperature | $T_{biv}$ | 7 | °C | For air-to-water heat pumps: Operation limit temperature | TOL | 2 | °C |
| Cycling interval capacity for heating | $P_{cych}$ | N/A | kW | Cycling interval efficiency | $COP_{cyc}$ | N/A | - |
| Degradation co-efficient (**) | $C_{dh}$ | 0.9 | - | Heating water operating limit temperature | WTOL | 65 | °C |
| Power consumption in modes other than active mode | | | | Supplementary heater | | | |
| Off mode | $P_{OFF}$ | 0.014 | kW | Rated heat output (**) | $P_{sup}$ | 0.0 | kW |
| Thermostat-off mode | $P_{TO}$ | 0.024 | kW | Type of energy input | Electric | | |
| Standby mode | $P_{SB}$ | 0.014 | kW | | | | |
| Crankcase heater mode | $P_{CK}$ | 0.000 | kW | | | | |

| **Other items** | | | | | | | |
|---|---|---|---|---|---|---|---|
| Capacity control | variable | | | For air-to-water heat pumps: Rated air flow rate, outdoors | - | 6000 | $m^3/h$ |
| Sound power level, indoors/ outdoors | $L_{WA}$ | -/68 | dB | For water- or brine-to-water heat pumps: Rated brine or water flow rate, outdoor heat exchanger | - | N/A | $m^3/h$ |
| Annual energy consumption | $Q_{HE}$ | 2934 | kWh | | | | |
| For heat pump combination heater: | | | | | | | |
| **Declared load profile** | N/A | | | **Water heating energy efficiency** | $\eta_{wh}$ | N/A | % |
| Daily electricity consumption | $Q_{elec}$ | N/A | kWh | Daily fuel consumption | $Q_{fuel}$ | N/A | kWh |
| Annual electricity consumption | AEC | N/A | kWh | Annual fuel consumption | AFC | N/A | GJ |
| Contact details | See the back cover of the manual | | | | | | |

(*) For heat pump space heaters and heat pump combination heaters, the rated heat output Prated is equal to the design load for heating Pdesignh, and the rated heat output of a supplementary heater Psup is equal to the supplementary capacity for heating sup(Tj).
(**) If Cdh is not determined by measurement then the default degradation coefficient is Cdh = 0.9.

## Technical parameters

| | |
|---|---|
| Model(s): | 16kW(heating 3kW);16kW |
| Air-to-water heat pump: | yes |
| Water-to-water heat pump: | no |
| Brine-to-water heat pump: | no |
| Low-temperature heat pump: | no |
| Equipped with a supplementary heater: | yes(for 16kW(heating 3kW))<br>no(for 16kW) |
| Heat pump combination heater: | no |
| Declared climate condition: | colder |

Parameters are declared for low-temperature application.

| Item | Symbol | Value | Unit | Item | Symbol | Value | Unit |
|---|---|---|---|---|---|---|---|
| **Rated heat output (*)** | $P_{rated}$ | 14 | kW | **Seasonal space heating energy efficiency** | $\eta_s$ | 156 | % |
| Declared capacity for heating for part load at indoor temperature 20 °C and outdoor temperature $T_j$ | | | | Declared capacity for heating for part load at indoor temperature 20 °C and outdoor temperature $T_j$ | | | |
| $T_j$ = – 7°C | $P_{dh}$ | 9.1 | kW | $T_j$ = – 7°C | $COP_d$ | 3.30 | - |
| $T_j$ = + 2°C | $P_{dh}$ | 5.0 | kW | $T_j$ = + 2°C | $COP_d$ | 4.87 | - |
| $T_j$ = + 7°C | $P_{dh}$ | 4.2 | kW | $T_j$ = + 7°C | $COP_d$ | 6.50 | - |
| $T_j$ = + 12°C | $P_{dh}$ | 3.7 | kW | $T_j$ = + 12°C | $COP_d$ | 7.59 | - |
| $T_j$ = bivalent temperature | $P_{dh}$ | 11.3 | kW | $T_j$ = bivalent temperature | $COP_d$ | 2.28 | - |
| $T_j$ = operation limit temperature | $P_{dh}$ | 9.8 | kW | $T_j$ = operation limit temperature | $COP_d$ | 1.89 | - |
| For air-to-water heat pumps: $T_j$ = – 15°C (if TOL < – 20°C) | $P_{dh}$ | N/A | kW | For air-to-water heat pumps: $T_j$ = – 15°C (if TOL < – 20°C) | $COP_d$ | N/A | - |
| Bivalent temperature | $T_{biv}$ | -15 | °C | For air-to-water heat pumps: Operation limit temperature | TOL | -22 | °C |
| Cycling interval capacity for heating | $P_{cych}$ | N/A | kW | Cycling interval efficiency | $COP_{cyc}$ | N/A | - |
| Degradation co-efficient (**) | $C_{dh}$ | 0.9 | - | Heating water operating limit temperature | WTOL | 65 | °C |
| Power consumption in modes other than active mode | | | | Supplementary heater | | | |
| Off mode | $P_{OFF}$ | 0.014 | kW | Rated heat output (**) | $P_{sup}$ | 4.2 | kW |
| Thermostat-off mode | $P_{TO}$ | 0.024 | kW | Type of energy input | Electric | | |
| Standby mode | $P_{SB}$ | 0.014 | kW | | | | |
| Crankcase heater mode | $P_{CK}$ | 0.000 | kW | | | | |

| **Other items** | | | | | | | |
|---|---|---|---|---|---|---|---|
| Capacity control | variable | | | For air-to-water heat pumps: Rated air flow rate, outdoors | - | 6000 | $m^3/h$ |
| Sound power level, indoors/ outdoors | $L_{WA}$ | -/68 | dB | For water- or brine-to-water heat pumps: Rated brine or water flow rate, outdoor heat exchanger | - | N/A | $m^3/h$ |
| Annual energy consumption | $Q_{HE}$ | 8618 | kWh | | | | |
| For heat pump combination heater: | | | | | | | |
| **Declared load profile** | N/A | | | **Water heating energy efficiency** | $\eta_{wh}$ | N/A | % |
| Daily electricity consumption | $Q_{elec}$ | N/A | kWh | Daily fuel consumption | $Q_{fuel}$ | N/A | kWh |
| Annual electricity consumption | AEC | N/A | kWh | Annual fuel consumption | AFC | N/A | GJ |
| Contact details | See the back cover of the manual | | | | | | |

(*) For heat pump space heaters and heat pump combination heaters, the rated heat output Prated is equal to the design load for heating Pdesignh, and the rated heat output of a supplementary heater Psup is equal to the supplementary capacity for heating sup(Tj).
(**) If Cdh is not determined by measurement then the default degradation coefficient is Cdh = 0.9.

## Technical parameters

| | |
|---|---|
| Model(s): | 16kW(heating 3kW);16kW |
| Air-to-water heat pump: | yes |
| Water-to-water heat pump: | no |
| Brine-to-water heat pump: | no |
| Low-temperature heat pump: | no |
| Equipped with a supplementary heater: | yes(for 16kW(heating 3kW))<br>no(for 16kW) |
| Heat pump combination heater: | no |
| Declared climate condition: | average |

Parameters are declared for medium-temperature application.

| Item | Symbol | Value | Unit | Item | Symbol | Value | Unit |
|---|---|---|---|---|---|---|---|
| **Rated heat output (*)** | $P_{rated}$ | 13 | kW | **Seasonal space heating energy efficiency** | $\eta_s$ | 136 | % |
| Declared capacity for heating for part load at indoor temperature 20 °C and outdoor temperature $T_j$ | | | | Declared capacity for heating for part load at indoor temperature 20 °C and outdoor temperature $T_j$ | | | |
| $T_j$ = – 7°C | $P_{dh}$ | 11.3 | kW | $T_j$ = – 7°C | $COP_d$ | 2.04 | - |
| $T_j$ = + 2°C | $P_{dh}$ | 7.3 | kW | $T_j$ = + 2°C | $COP_d$ | 3.31 | - |
| $T_j$ = + 7°C | $P_{dh}$ | 4.8 | kW | $T_j$ = + 7°C | $COP_d$ | 4.81 | - |
| $T_j$ = + 12°C | $P_{dh}$ | 4.0 | kW | $T_j$ = + 12°C | $COP_d$ | 7.35 | - |
| $T_j$ = bivalent temperature | $P_{dh}$ | 11.3 | kW | $T_j$ = bivalent temperature | $COP_d$ | 2.04 | - |
| $T_j$ = operation limit temperature | $P_{dh}$ | 11.2 | kW | $T_j$ = operation limit temperature | $COP_d$ | 1.72 | - |
| For air-to-water heat pumps: $T_j$ = – 15°C (if TOL < – 20°C) | $P_{dh}$ | N/A | kW | For air-to-water heat pumps: $T_j$ = – 15°C (if TOL < – 20°C) | $COP_d$ | N/A | - |
| Bivalent temperature | $T_{biv}$ | -7 | °C | For air-to-water heat pumps: Operation limit temperature | TOL | -10 | °C |
| Cycling interval capacity for heating | $P_{cych}$ | N/A | kW | Cycling interval efficiency | $COP_{cyc}$ | N/A | - |
| Degradation co-efficient (**) | $C_{dh}$ | 0.9 | - | Heating water operating limit temperature | WTOL | 65 | °C |
| Power consumption in modes other than active mode | | | | Supplementary heater | | | |
| Off mode | $P_{OFF}$ | 0.014 | kW | Rated heat output (**) | $P_{sup}$ | 1.8 | kW |
| Thermostat-off mode | $P_{TO}$ | 0.024 | kW | Type of energy input | Electric | | |
| Standby mode | $P_{SB}$ | 0.014 | kW | | | | |
| Crankcase heater mode | $P_{CK}$ | 0.000 | kW | | | | |

| **Other items** | | | | | | | |
|---|---|---|---|---|---|---|---|
| Capacity control | variable | | | For air-to-water heat pumps: Rated air flow rate, outdoors | - | 6000 | $m^3/h$ |
| Sound power level, indoors/ outdoors | $L_{WA}$ | -/68 | dB | For water- or brine-to-water heat pumps: Rated brine or water flow rate, outdoor heat exchanger | - | N/A | $m^3/h$ |
| Annual energy consumption | $Q_{HE}$ | 7593 | kWh | | | | |
| For heat pump combination heater: | | | | | | | |
| **Declared load profile** | N/A | | | **Water heating energy efficiency** | $\eta_{wh}$ | N/A | % |
| Daily electricity consumption | $Q_{elec}$ | N/A | kWh | Daily fuel consumption | $Q_{fuel}$ | N/A | kWh |
| Annual electricity consumption | AEC | N/A | kWh | Annual fuel consumption | AFC | N/A | GJ |
| Contact details | See the back cover of the manual | | | | | | |

(*) For heat pump space heaters and heat pump combination heaters, the rated heat output Prated is equal to the design load for heating Pdesignh, and the rated heat output of a supplementary heater Psup is equal to the supplementary capacity for heating sup(Tj).
(**) If Cdh is not determined by measurement then the default degradation coefficient is Cdh = 0.9.

## Technical parameters

| | |
|---|---|
| Model(s): | 16kW(heating 3kW);16kW |
| Air-to-water heat pump: | yes |
| Water-to-water heat pump: | no |
| Brine-to-water heat pump: | no |
| Low-temperature heat pump: | no |
| Equipped with a supplementary heater: | yes(for 16kW(heating 3kW))<br>no(for 16kW) |
| Heat pump combination heater: | no |
| Declared climate condition: | warmer |

Parameters are declared for medium-temperature application.

| Item | Symbol | Value | Unit | Item | Symbol | Value | Unit |
|---|---|---|---|---|---|---|---|
| **Rated heat output (*)** | $P_{rated}$ | 14 | kW | **Seasonal space heating energy efficiency** | $\eta_s$ | 171 | % |
| Declared capacity for heating for part load at indoor temperature 20 °C and outdoor temperature $T_j$ | | | | Declared capacity for heating for part load at indoor temperature 20 °C and outdoor temperature $T_j$ | | | |
| $T_j$ = – 7°C | $P_{dh}$ | N/A | kW | $T_j$ = – 7°C | $COP_d$ | N/A | - |
| $T_j$ = + 2°C | $P_{dh}$ | 13.2 | kW | $T_j$ = + 2°C | $COP_d$ | 2.30 | - |
| $T_j$ = + 7°C | $P_{dh}$ | 9.0 | kW | $T_j$ = + 7°C | $COP_d$ | 3.68 | - |
| $T_j$ = + 12°C | $P_{dh}$ | 4.1 | kW | $T_j$ = + 12°C | $COP_d$ | 5.80 | - |
| $T_j$ = bivalent temperature | $P_{dh}$ | 9.0 | kW | $T_j$ = bivalent temperature | $COP_d$ | 3.68 | - |
| $T_j$ = operation limit temperature | $P_{dh}$ | 13.2 | kW | $T_j$ = operation limit temperature | $COP_d$ | 2.30 | - |
| For air-to-water heat pumps: $T_j$ = – 15°C (if TOL < – 20°C) | $P_{dh}$ | N/A | kW | For air-to-water heat pumps: $T_j$ = – 15°C (if TOL < – 20°C) | $COP_d$ | N/A | - |
| Bivalent temperature | $T_{biv}$ | 7 | °C | For air-to-water heat pumps: Operation limit temperature | TOL | 2 | °C |
| Cycling interval capacity for heating | $P_{cych}$ | N/A | kW | Cycling interval efficiency | $COP_{cyc}$ | N/A | - |
| Degradation co-efficient (**) | $C_{dh}$ | 0.9 | - | Heating water operating limit temperature | WTOL | 65 | °C |
| Power consumption in modes other than active mode | | | | Supplementary heater | | | |
| Off mode | $P_{OFF}$ | 0.014 | kW | Rated heat output (**) | $P_{sup}$ | 0.8 | kW |
| Thermostat-off mode | $P_{TO}$ | 0.024 | kW | Type of energy input | Electric | | |
| Standby mode | $P_{SB}$ | 0.014 | kW | | | | |
| Crankcase heater mode | $P_{CK}$ | 0.000 | kW | | | | |

| **Other items** | | | | | | | |
|---|---|---|---|---|---|---|---|
| Capacity control | variable | | | For air-to-water heat pumps: Rated air flow rate, outdoors | - | 6000 | $m^3/h$ |
| Sound power level, indoors/ outdoors | $L_{WA}$ | -/68 | dB | For water- or brine-to-water heat pumps: Rated brine or water flow rate, outdoor heat exchanger | - | N/A | $m^3/h$ |
| Annual energy consumption | $Q_{HE}$ | 4329 | kWh | | | | |
| For heat pump combination heater: | | | | | | | |
| **Declared load profile** | N/A | | | **Water heating energy efficiency** | $\eta_{wh}$ | N/A | % |
| Daily electricity consumption | $Q_{elec}$ | N/A | kWh | Daily fuel consumption | $Q_{fuel}$ | N/A | kWh |
| Annual electricity consumption | AEC | N/A | kWh | Annual fuel consumption | AFC | N/A | GJ |
| Contact details | See the back cover of the manual | | | | | | |

(*) For heat pump space heaters and heat pump combination heaters, the rated heat output Prated is equal to the design load for heating Pdesignh, and the rated heat output of a supplementary heater Psup is equal to the supplementary capacity for heating sup(Tj).
(**) If Cdh is not determined by measurement then the default degradation coefficient is Cdh = 0.9.

## Technical parameters

| | |
|---|---|
| Model(s): | 16kW(heating 3kW);16kW |
| Air-to-water heat pump: | yes |
| Water-to-water heat pump: | no |
| Brine-to-water heat pump: | no |
| Low-temperature heat pump: | no |
| Equipped with a supplementary heater: | yes(for 16kW(heating 3kW))<br>no(for 16kW) |
| Heat pump combination heater: | no |
| Declared climate condition: | colder |

Parameters are declared for medium-temperature application.

| Item | Symbol | Value | Unit | Item | Symbol | Value | Unit |
|---|---|---|---|---|---|---|---|
| **Rated heat output (*)** | $P_{rated}$ | 12 | kW | **Seasonal space heating energy efficiency** | $\eta_s$ | 121 | % |
| Declared capacity for heating for part load at indoor temperature 20 °C and outdoor temperature $T_j$ | | | | Declared capacity for heating for part load at indoor temperature 20 °C and outdoor temperature $T_j$ | | | |
| $T_j$ = – 7°C | $P_{dh}$ | 7.7 | kW | $T_j$ = – 7°C | $COP_d$ | 2.61 | - |
| $T_j$ = + 2°C | $P_{dh}$ | 4.5 | kW | $T_j$ = + 2°C | $COP_d$ | 3.78 | - |
| $T_j$ = + 7°C | $P_{dh}$ | 3.2 | kW | $T_j$ = + 7°C | $COP_d$ | 4.87 | - |
| $T_j$ = + 12°C | $P_{dh}$ | 3.6 | kW | $T_j$ = + 12°C | $COP_d$ | 6.39 | - |
| $T_j$ = bivalent temperature | $P_{dh}$ | 9.6 | kW | $T_j$ = bivalent temperature | $COP_d$ | 1.84 | - |
| $T_j$ = operation limit temperature | $P_{dh}$ | 5.1 | kW | $T_j$ = operation limit temperature | $COP_d$ | 1.04 | - |
| For air-to-water heat pumps: $T_j$ = – 15°C (if TOL < – 20°C) | $P_{dh}$ | N/A | kW | For air-to-water heat pumps: $T_j$ = – 15°C (if TOL < – 20°C) | $COP_d$ | N/A | - |
| Bivalent temperature | $T_{biv}$ | -15 | °C | For air-to-water heat pumps: Operation limit temperature | TOL | -22 | °C |
| Cycling interval capacity for heating | $P_{cych}$ | N/A | kW | Cycling interval efficiency | $COP_{cyc}$ | N/A | - |
| Degradation co-efficient (**) | $C_{dh}$ | 0.9 | - | Heating water operating limit temperature | WTOL | 65 | °C |
| Power consumption in modes other than active mode | | | | Supplementary heater | | | |
| Off mode | $P_{OFF}$ | 0.014 | kW | Rated heat output (**) | $P_{sup}$ | 6.9 | kW |
| Thermostat-off mode | $P_{TO}$ | 0.024 | kW | Type of energy input | Electric | | |
| Standby mode | $P_{SB}$ | 0.014 | kW | | | | |
| Crankcase heater mode | $P_{CK}$ | 0.000 | kW | | | | |

| **Other items** | | | | | | | |
|---|---|---|---|---|---|---|---|
| Capacity control | variable | | | For air-to-water heat pumps: Rated air flow rate, outdoors | - | 6000 | $m^3/h$ |
| Sound power level, indoors/ outdoors | $L_{WA}$ | -/68 | dB | For water- or brine-to-water heat pumps: Rated brine or water flow rate, outdoor heat exchanger | - | N/A | $m^3/h$ |
| Annual energy consumption | $Q_{HE}$ | 9389 | kWh | | | | |
| For heat pump combination heater: | | | | | | | |
| **Declared load profile** | N/A | | | **Water heating energy efficiency** | $\eta_{wh}$ | N/A | % |
| Daily electricity consumption | $Q_{elec}$ | N/A | kWh | Daily fuel consumption | $Q_{fuel}$ | N/A | kWh |
| Annual electricity consumption | AEC | N/A | kWh | Annual fuel consumption | AFC | N/A | GJ |
| Contact details | See the back cover of the manual | | | | | | |

(*) For heat pump space heaters and heat pump combination heaters, the rated heat output Prated is equal to the design load for heating Pdesignh, and the rated heat output of a supplementary heater Psup is equal to the supplementary capacity for heating sup(Tj).
(**) If Cdh is not determined by measurement then the default degradation coefficient is Cdh = 0.9.

## Technical parameters

| | |
|---|---|
| Model(s): | 3-PH 12kW(heating 9kW);3-PH 12kW(heating 6kW); 3-PH 12kW(heating 3kW);3-PH 12kW |
| Air-to-water heat pump: | yes |
| Water-to-water heat pump: | no |
| Brine-to-water heat pump: | no |
| Low-temperature heat pump: | no |
| Equipped with a supplementary heater: | yes(for 3-PH 12kW(heating 9kW);3-PH 12kW(heating 6kW);3-PH 12kW(heating 3kW)) no(for 3-PH 12kW) |
| Heat pump combination heater: | no |
| Declared climate condition: | average |

Parameters are declared for low-temperature application.

| Item | Symbol | Value | Unit | Item | Symbol | Value | Unit |
|---|---|---|---|---|---|---|---|
| **Rated heat output (*)** | $P_{rated}$ | 12 | kW | **Seasonal space heating energy efficiency** | $\eta_s$ | 187 | % |
| Declared capacity for heating for part load at indoor temperature 20 °C and outdoor temperature $T_j$ | | | | Declared coefficient of performance or primary energy ratio for part load at indoor temperature 20 °C and outdoor temperature Tj | | | |
| $T_j$ = – 7°C | $P_{dh}$ | 10.7 | kW | $T_j$ = – 7°C | $COP_d$ | 2.90 | - |
| $T_j$ = + 2°C | $P_{dh}$ | 7.0 | kW | $T_j$ = + 2°C | $COP_d$ | 4.53 | - |
| $T_j$ = + 7°C | $P_{dh}$ | 4.6 | kW | $T_j$ = + 7°C | $COP_d$ | 6.65 | - |
| $T_j$ = + 12°C | $P_{dh}$ | 4.2 | kW | $T_j$ = + 12°C | $COP_d$ | 8.92 | - |
| $T_j$ = bivalent temperature | $P_{dh}$ | 10.7 | kW | $T_j$ = bivalent temperature | $COP_d$ | 2.90 | - |
| $T_j$ = operation limit temperature | $P_{dh}$ | 11.4 | kW | $T_j$ = operation limit temperature | $COP_d$ | 2.63 | - |
| For air-to-water heat pumps: $T_j$ = – 15°C (if TOL < – 20°C) | $P_{dh}$ | N/A | kW | For air-to-water heat pumps: $T_j$ = – 15°C (if TOL < – 20°C) | $COP_d$ | N/A | - |
| Bivalent temperature | $T_{biv}$ | -7 | °C | For air-to-water heat pumps: Operation limit temperature | TOL | -10 | °C |
| Cycling interval capacity for heating | $P_{cych}$ | N/A | kW | Cycling interval efficiency | $COP_{cyc}$ | N/A | - |
| Degradation co-efficient (**) | $C_{dh}$ | 0.9 | - | Heating water operating limit temperature | WTOL | 65 | °C |
| Power consumption in modes other than active mode | | | | Supplementary heater | | | |
| Off mode | $P_{OFF}$ | 0.014 | kW | Rated heat output (**) | $P_{sup}$ | 0.6 | kW |
| Thermostat-off mode | $P_{TO}$ | 0.024 | kW | Type of energy input | Electric | | |
| Standby mode | $P_{SB}$ | 0.014 | kW | | | | |
| Crankcase heater mode | $P_{CK}$ | 0.000 | kW | | | | |

| **Other items** | | | | | | | |
|---|---|---|---|---|---|---|---|
| Capacity control | variable | | | For air-to-water heat pumps: Rated air flow rate, outdoors | - | 5000 | $m^3/h$ |
| Sound power level, indoors/ outdoors | $L_{WA}$ | -/64 | dB | For water- or brine-to-water heat pumps: Rated brine or water flow rate, outdoor heat exchanger | - | N/A | $m^3/h$ |
| Annual energy consumption | $Q_{HE}$ | 5256 | kWh | | | | |
| For heat pump combination heater: | | | | | | | |
| **Declared load profile** | N/A | | | **Water heating energy efficiency** | $\eta_{wh}$ | N/A | % |
| Daily electricity consumption | $Q_{elec}$ | N/A | kWh | Daily fuel consumption | $Q_{fuel}$ | N/A | kWh |
| Annual electricity consumption | AEC | N/A | kWh | Annual fuel consumption | AFC | N/A | GJ |
| Contact details | See the back cover of the manual | | | | | | |

(*) For heat pump space heaters and heat pump combination heaters, the rated heat output Prated is equal to the design load for heating Pdesignh, and the rated heat output of a supplementary heater Psup is equal to the supplementary capacity for heating sup(Tj).
(**) If Cdh is not determined by measurement then the default degradation coefficient is Cdh = 0.9.

## Technical parameters

| | |
|---|---|
| Model(s): | 3-PH 12kW(heating 9kW);3-PH 12kW(heating 6kW); 3-PH 12kW(heating 3kW);3-PH 12kW |
| Air-to-water heat pump: | yes |
| Water-to-water heat pump: | no |
| Brine-to-water heat pump: | no |
| Low-temperature heat pump: | no |
| Equipped with a supplementary heater: | yes(for 3-PH 12kW(heating 9kW);3-PH 12kW(heating 6kW);3-PH 12kW(heating 3kW)) no(for 3-PH 12kW) |
| Heat pump combination heater: | no |
| Declared climate condition: | warmer |

Parameters are declared for low-temperature application.

| Item | Symbol | Value | Unit | Item | Symbol | Value | Unit |
|---|---|---|---|---|---|---|---|
| **Rated heat output (*)** | $P_{rated}$ | 11 | kW | **Seasonal space heating energy efficiency** | $\eta_s$ | 253 | % |
| Declared capacity for heating for part load at indoor temperature 20 °C and outdoor temperature $T_j$ | | | | Declared coefficient of performance or primary energy ratio for part load at indoor temperature 20 °C and outdoor temperature Tj | | | |
| $T_j$ = – 7°C | $P_{dh}$ | N/A | kW | $T_j$ = – 7°C | $COP_d$ | N/A | - |
| $T_j$ = + 2°C | $P_{dh}$ | 11.1 | kW | $T_j$ = + 2°C | $COP_d$ | 3.62 | - |
| $T_j$ = + 7°C | $P_{dh}$ | 7.2 | kW | $T_j$ = + 7°C | $COP_d$ | 5.64 | - |
| $T_j$ = + 12°C | $P_{dh}$ | 4.7 | kW | $T_j$ = + 12°C | $COP_d$ | 8.34 | - |
| $T_j$ = bivalent temperature | $P_{dh}$ | 7.2 | kW | $T_j$ = bivalent temperature | $COP_d$ | 5.64 | - |
| $T_j$ = operation limit temperature | $P_{dh}$ | 11.1 | kW | $T_j$ = operation limit temperature | $COP_d$ | 3.62 | - |
| For air-to-water heat pumps: $T_j$ = – 15°C (if TOL < – 20°C) | $P_{dh}$ | N/A | kW | For air-to-water heat pumps: $T_j$ = – 15°C (if TOL < – 20°C) | $COP_d$ | N/A | - |
| Bivalent temperature | $T_{biv}$ | 7 | °C | For air-to-water heat pumps: Operation limit temperature | TOL | 2 | °C |
| Cycling interval capacity for heating | $P_{cych}$ | N/A | kW | Cycling interval efficiency | $COP_{cyc}$ | N/A | - |
| Degradation co-efficient (**) | $C_{dh}$ | 0.9 | - | Heating water operating limit temperature | WTOL | 65 | °C |
| Power consumption in modes other than active mode | | | | Supplementary heater | | | |
| Off mode | $P_{OFF}$ | 0.014 | kW | Rated heat output (**) | $P_{sup}$ | 0.0 | kW |
| Thermostat-off mode | $P_{TO}$ | 0.024 | kW | Type of energy input | Electric | | |
| Standby mode | $P_{SB}$ | 0.014 | kW | | | | |
| Crankcase heater mode | $P_{CK}$ | 0.000 | kW | | | | |

| **Other items** | | | | | | | |
|---|---|---|---|---|---|---|---|
| Capacity control | variable | | | For air-to-water heat pumps: Rated air flow rate, outdoors | - | 5000 | $m^3/h$ |
| Sound power level, indoors/ outdoors | $L_{WA}$ | -/64 | dB | For water- or brine-to-water heat pumps: Rated brine or water flow rate, outdoor heat exchanger | - | N/A | $m^3/h$ |
| Annual energy consumption | $Q_{HE}$ | 2325 | kWh | | | | |
| For heat pump combination heater: | | | | | | | |
| **Declared load profile** | N/A | | | **Water heating energy efficiency** | $\eta_{wh}$ | N/A | % |
| Daily electricity consumption | $Q_{elec}$ | N/A | kWh | Daily fuel consumption | $Q_{fuel}$ | N/A | kWh |
| Annual electricity consumption | AEC | N/A | kWh | Annual fuel consumption | AFC | N/A | GJ |
| Contact details | See the back cover of the manual | | | | | | |

(*) For heat pump space heaters and heat pump combination heaters, the rated heat output Prated is equal to the design load for heating Pdesignh, and the rated heat output of a supplementary heater Psup is equal to the supplementary capacity for heating sup(Tj).
(**) If Cdh is not determined by measurement then the default degradation coefficient is Cdh = 0.9.

## Technical parameters

| | |
|---|---|
| Model(s): | 3-PH 12kW(heating 9kW);3-PH 12kW(heating 6kW); 3-PH 12kW(heating 3kW);3-PH 12kW |
| Air-to-water heat pump: | yes |
| Water-to-water heat pump: | no |
| Brine-to-water heat pump: | no |
| Low-temperature heat pump: | no |
| Equipped with a supplementary heater: | yes(for 3-PH 12kW(heating 9kW);3-PH 12kW(heating 6kW);3-PH 12kW(heating 3kW)) no(for 3-PH 12kW) |
| Heat pump combination heater: | no |
| Declared climate condition: | colder |

Parameters are declared for low-temperature application.

| Item | Symbol | Value | Unit | Item | Symbol | Value | Unit |
|---|---|---|---|---|---|---|---|
| **Rated heat output (*)** | $P_{rated}$ | 11 | kW | **Seasonal space heating energy efficiency** | $\eta_s$ | 163 | % |
| Declared capacity for heating for part load at indoor temperature 20 °C and outdoor temperature $T_j$ | | | | Declared coefficient of performance or primary energy ratio for part load at indoor temperature 20 °C and outdoor temperature Tj | | | |
| $T_j$ = – 7°C | $P_{dh}$ | 7.2 | kW | $T_j$ = – 7°C | $COP_d$ | 3.51 | - |
| $T_j$ = + 2°C | $P_{dh}$ | 4.2 | kW | $T_j$ = + 2°C | $COP_d$ | 5.06 | - |
| $T_j$ = + 7°C | $P_{dh}$ | 3.2 | kW | $T_j$ = + 7°C | $COP_d$ | 6.20 | - |
| $T_j$ = + 12°C | $P_{dh}$ | 3.6 | kW | $T_j$ = + 12°C | $COP_d$ | 8.19 | - |
| $T_j$ = bivalent temperature | $P_{dh}$ | 9.3 | kW | $T_j$ = bivalent temperature | $COP_d$ | 2.59 | - |
| $T_j$ = operation limit temperature | $P_{dh}$ | 7.1 | kW | $T_j$ = operation limit temperature | $COP_d$ | 2.08 | - |
| For air-to-water heat pumps: $T_j$ = – 15°C (if TOL < – 20°C) | $P_{dh}$ | N/A | kW | For air-to-water heat pumps: $T_j$ = – 15°C (if TOL < – 20°C) | $COP_d$ | N/A | - |
| Bivalent temperature | $T_{biv}$ | -15 | °C | For air-to-water heat pumps: Operation limit temperature | TOL | -22 | °C |
| Cycling interval capacity for heating | $P_{cych}$ | N/A | kW | Cycling interval efficiency | $COP_{cyc}$ | N/A | - |
| Degradation co-efficient (**) | $C_{dh}$ | 0.9 | - | Heating water operating limit temperature | WTOL | 65 | °C |
| Power consumption in modes other than active mode | | | | Supplementary heater | | | |
| Off mode | $P_{OFF}$ | 0.014 | kW | Rated heat output (**) | $P_{sup}$ | 3.9 | kW |
| Thermostat-off mode | $P_{TO}$ | 0.024 | kW | Type of energy input | Electric | | |
| Standby mode | $P_{SB}$ | 0.014 | kW | | | | |
| Crankcase heater mode | $P_{CK}$ | 0.000 | kW | | | | |

| **Other items** | | | | | | | |
|---|---|---|---|---|---|---|---|
| Capacity control | variable | | | For air-to-water heat pumps: Rated air flow rate, outdoors | - | 5000 | $m^3/h$ |
| Sound power level, indoors/ outdoors | $L_{WA}$ | -/64 | dB | For water- or brine-to-water heat pumps: Rated brine or water flow rate, outdoor heat exchanger | - | N/A | $m^3/h$ |
| Annual energy consumption | $Q_{HE}$ | 6738 | kWh | | | | |
| For heat pump combination heater: | | | | | | | |
| **Declared load profile** | N/A | | | **Water heating energy efficiency** | $\eta_{wh}$ | N/A | % |
| Daily electricity consumption | $Q_{elec}$ | N/A | kWh | Daily fuel consumption | $Q_{fuel}$ | N/A | kWh |
| Annual electricity consumption | AEC | N/A | kWh | Annual fuel consumption | AFC | N/A | GJ |
| Contact details | See the back cover of the manual | | | | | | |

(*) For heat pump space heaters and heat pump combination heaters, the rated heat output Prated is equal to the design load for heating Pdesignh, and the rated heat output of a supplementary heater Psup is equal to the supplementary capacity for heating sup(Tj).
(**) If Cdh is not determined by measurement then the default degradation coefficient is Cdh = 0.9.

## Technical parameters

| | |
|---|---|
| Model(s): | 3-PH 12kW(heating 9kW);3-PH 12kW(heating 6kW); 3-PH 12kW(heating 3kW);3-PH 12kW |
| Air-to-water heat pump: | yes |
| Water-to-water heat pump: | no |
| Brine-to-water heat pump: | no |
| Low-temperature heat pump: | no |
| Equipped with a supplementary heater: | yes(for 3-PH 12kW(heating 9kW);3-PH 12kW(heating 6kW);3-PH 12kW(heating 3kW)) no(for 3-PH 12kW) |
| Heat pump combination heater: | no |
| Declared climate condition: | average |

Parameters are declared for medium-temperature application.

| Item | Symbol | Value | Unit | Item | Symbol | Value | Unit |
|---|---|---|---|---|---|---|---|
| **Rated heat output (*)** | $P_{rated}$ | 12 | kW | **Seasonal space heating energy efficiency** | $\eta_s$ | 138 | % |
| Declared capacity for heating for part load at indoor temperature 20 °C and outdoor temperature $T_j$ | | | | Declared coefficient of performance or primary energy ratio for part load at indoor temperature 20 °C and outdoor temperature Tj | | | |
| $T_j$ = – 7°C | $P_{dh}$ | 10.7 | kW | $T_j$ = – 7°C | $COP_d$ | 2.13 | - |
| $T_j$ = + 2°C | $P_{dh}$ | 6.6 | kW | $T_j$ = + 2°C | $COP_d$ | 3.33 | - |
| $T_j$ = + 7°C | $P_{dh}$ | 4.4 | kW | $T_j$ = + 7°C | $COP_d$ | 4.88 | - |
| $T_j$ = + 12°C | $P_{dh}$ | 4.0 | kW | $T_j$ = + 12°C | $COP_d$ | 7.67 | - |
| $T_j$ = bivalent temperature | $P_{dh}$ | 10.7 | kW | $T_j$ = bivalent temperature | $COP_d$ | 2.13 | - |
| $T_j$ = operation limit temperature | $P_{dh}$ | 10.0 | kW | $T_j$ = operation limit temperature | $COP_d$ | 1.82 | - |
| For air-to-water heat pumps: $T_j$ = – 15°C (if TOL < – 20°C) | $P_{dh}$ | N/A | kW | For air-to-water heat pumps: $T_j$ = – 15°C (if TOL < – 20°C) | $COP_d$ | N/A | - |
| Bivalent temperature | $T_{biv}$ | -7 | °C | For air-to-water heat pumps: Operation limit temperature | TOL | -10 | °C |
| Cycling interval capacity for heating | $P_{cych}$ | N/A | kW | Cycling interval efficiency | $COP_{cyc}$ | N/A | - |
| Degradation co-efficient (**) | $C_{dh}$ | 0.9 | - | Heating water operating limit temperature | WTOL | 65 | °C |
| Power consumption in modes other than active mode | | | | Supplementary heater | | | |
| Off mode | $P_{OFF}$ | 0.014 | kW | Rated heat output (**) | $P_{sup}$ | 2.0 | kW |
| Thermostat-off mode | $P_{TO}$ | 0.024 | kW | Type of energy input | Electric | | |
| Standby mode | $P_{SB}$ | 0.014 | kW | | | | |
| Crankcase heater mode | $P_{CK}$ | 0.000 | kW | | | | |

| **Other items** | | | | | | | |
|---|---|---|---|---|---|---|---|
| Capacity control | variable | | | For air-to-water heat pumps: Rated air flow rate, outdoors | - | 5000 | $m^3/h$ |
| Sound power level, indoors/ outdoors | $L_{WA}$ | -/64 | dB | For water- or brine-to-water heat pumps: Rated brine or water flow rate, outdoor heat exchanger | - | N/A | $m^3/h$ |
| Annual energy consumption | $Q_{HE}$ | 7085 | kWh | | | | |
| For heat pump combination heater: | | | | | | | |
| **Declared load profile** | N/A | | | **Water heating energy efficiency** | $\eta_{wh}$ | N/A | % |
| Daily electricity consumption | $Q_{elec}$ | N/A | kWh | Daily fuel consumption | $Q_{fuel}$ | N/A | kWh |
| Annual electricity consumption | AEC | N/A | kWh | Annual fuel consumption | AFC | N/A | GJ |
| Contact details | See the back cover of the manual | | | | | | |

(*) For heat pump space heaters and heat pump combination heaters, the rated heat output Prated is equal to the design load for heating Pdesignh, and the rated heat output of a supplementary heater Psup is equal to the supplementary capacity for heating sup(Tj).
(**) If Cdh is not determined by measurement then the default degradation coefficient is Cdh = 0.9.

## Technical parameters

| | |
|---|---|
| Model(s): | 3-PH 12kW(heating 9kW);3-PH 12kW(heating 6kW); 3-PH 12kW(heating 3kW);3-PH 12kW |
| Air-to-water heat pump: | yes |
| Water-to-water heat pump: | no |
| Brine-to-water heat pump: | no |
| Low-temperature heat pump: | no |
| Equipped with a supplementary heater: | yes(for 3-PH 12kW(heating 9kW);3-PH 12kW(heating 6kW);3-PH 12kW(heating 3kW)) no(for 3-PH 12kW) |
| Heat pump combination heater: | no |
| Declared climate condition: | warmer |
| Parameters are declared for medium-temperature application. | |

| Item | Symbol | Value | Unit | Item | Symbol | Value | Unit |
|---|---|---|---|---|---|---|---|
| **Rated heat output (*)** | $P_{rated}$ | 12 | kW | **Seasonal space heating energy efficiency** | $\eta_s$ | 175 | % |
| Declared capacity for heating for part load at indoor temperature 20 °C and outdoor temperature $T_j$ | | | | Declared coefficient of performance or primary energy ratio for part load at indoor temperature 20 °C and outdoor temperature Tj | | | |
| $T_j$ = – 7°C | $P_{dh}$ | N/A | kW | $T_j$ = – 7°C | $COP_d$ | N/A | - |
| $T_j$ = + 2°C | $P_{dh}$ | 12.1 | kW | $T_j$ = + 2°C | $COP_d$ | 2.27 | - |
| $T_j$ = + 7°C | $P_{dh}$ | 8.0 | kW | $T_j$ = + 7°C | $COP_d$ | 3.85 | - |
| $T_j$ = + 12°C | $P_{dh}$ | 4.3 | kW | $T_j$ = + 12°C | $COP_d$ | 5.95 | - |
| $T_j$ = bivalent temperature | $P_{dh}$ | 8.0 | kW | $T_j$ = bivalent temperature | $COP_d$ | 3.85 | - |
| $T_j$ = operation limit temperature | $P_{dh}$ | 12.1 | kW | $T_j$ = operation limit temperature | $COP_d$ | 2.27 | - |
| For air-to-water heat pumps: $T_j$ = – 15°C (if TOL < – 20°C) | $P_{dh}$ | N/A | kW | For air-to-water heat pumps: $T_j$ = – 15°C (if TOL < – 20°C) | $COP_d$ | N/A | - |
| Bivalent temperature | $T_{biv}$ | 7 | °C | For air-to-water heat pumps: Operation limit temperature | TOL | 2 | °C |
| Cycling interval capacity for heating | $P_{cych}$ | N/A | kW | Cycling interval efficiency | $COP_{cyc}$ | N/A | - |
| Degradation co-efficient (**) | $C_{dh}$ | 0.9 | - | Heating water operating limit temperature | WTOL | 65 | °C |
| Power consumption in modes other than active mode | | | | Supplementary heater | | | |
| Off mode | $P_{OFF}$ | 0.014 | kW | Rated heat output (**) | $P_{sup}$ | 0.0 | kW |
| Thermostat-off mode | $P_{TO}$ | 0.024 | kW | Type of energy input | Electric | | |
| Standby mode | $P_{SB}$ | 0.014 | kW | | | | |
| Crankcase heater mode | $P_{CK}$ | 0.000 | kW | | | | |

| **Other items** | | | | | | | |
|---|---|---|---|---|---|---|---|
| Capacity control | variable | | | For air-to-water heat pumps: Rated air flow rate, outdoors | - | 5000 | $m^3/h$ |
| Sound power level, indoors/ outdoors | $L_{WA}$ | -/64 | dB | For water- or brine-to-water heat pumps: Rated brine or water flow rate, outdoor heat exchanger | - | N/A | $m^3/h$ |
| Annual energy consumption | $Q_{HE}$ | 3733 | kWh | | | | |
| For heat pump combination heater: | | | | | | | |
| **Declared load profile** | N/A | | | **Water heating energy efficiency** | $\eta_{wh}$ | N/A | % |
| Daily electricity consumption | $Q_{elec}$ | N/A | kWh | Daily fuel consumption | $Q_{fuel}$ | N/A | kWh |
| Annual electricity consumption | AEC | N/A | kWh | Annual fuel consumption | AFC | N/A | GJ |
| Contact details | See the back cover of the manual | | | | | | |

(*) For heat pump space heaters and heat pump combination heaters, the rated heat output Prated is equal to the design load for heating Pdesignh, and the rated heat output of a supplementary heater Psup is equal to the supplementary capacity for heating sup(Tj).
(**) If Cdh is not determined by measurement then the default degradation coefficient is Cdh = 0.9.

## Technical parameters

| | |
|---|---|
| Model(s): | 3-PH 12kW(heating 9kW);3-PH 12kW(heating 6kW); 3-PH 12kW(heating 3kW);3-PH 12kW |
| Air-to-water heat pump: | yes |
| Water-to-water heat pump: | no |
| Brine-to-water heat pump: | no |
| Low-temperature heat pump: | no |
| Equipped with a supplementary heater: | yes(for 3-PH 12kW(heating 9kW);3-PH 12kW(heating 6kW);3-PH 12kW(heating 3kW)) no(for 3-PH 12kW) |
| Heat pump combination heater: | no |
| Declared climate condition: | colder |

Parameters are declared for medium-temperature application.

| Item | Symbol | Value | Unit | Item | Symbol | Value | Unit |
|---|---|---|---|---|---|---|---|
| **Rated heat output (*)** | $P_{rated}$ | 10 | kW | **Seasonal space heating energy efficiency** | $\eta_s$ | 119 | % |
| Declared capacity for heating for part load at indoor temperature 20 °C and outdoor temperature $T_j$ | | | | Declared coefficient of performance or primary energy ratio for part load at indoor temperature 20 °C and outdoor temperature Tj | | | |
| $T_j$ = – 7°C | $P_{dh}$ | 6.7 | kW | $T_j$ = – 7°C | $COP_d$ | 2.58 | - |
| $T_j$ = + 2°C | $P_{dh}$ | 4.0 | kW | $T_j$ = + 2°C | $COP_d$ | 3.68 | - |
| $T_j$ = + 7°C | $P_{dh}$ | 2.9 | kW | $T_j$ = + 7°C | $COP_d$ | 4.57 | - |
| $T_j$ = + 12°C | $P_{dh}$ | 3.3 | kW | $T_j$ = + 12°C | $COP_d$ | 6.59 | - |
| $T_j$ = bivalent temperature | $P_{dh}$ | 8.5 | kW | $T_j$ = bivalent temperature | $COP_d$ | 1.89 | - |
| $T_j$ = operation limit temperature | $P_{dh}$ | 4.7 | kW | $T_j$ = operation limit temperature | $COP_d$ | 1.21 | - |
| For air-to-water heat pumps: $T_j$ = – 15°C (if TOL < – 20°C) | $P_{dh}$ | N/A | kW | For air-to-water heat pumps: $T_j$ = – 15°C (if TOL < – 20°C) | $COP_d$ | N/A | - |
| Bivalent temperature | $T_{biv}$ | -15 | °C | For air-to-water heat pumps: Operation limit temperature | TOL | -22 | °C |
| Cycling interval capacity for heating | $P_{cych}$ | N/A | kW | Cycling interval efficiency | $COP_{cyc}$ | N/A | - |
| Degradation co-efficient (**) | $C_{dh}$ | 0.9 | - | Heating water operating limit temperature | WTOL | 65 | °C |
| Power consumption in modes other than active mode | | | | Supplementary heater | | | |
| Off mode | $P_{OFF}$ | 0.014 | kW | Rated heat output (**) | $P_{sup}$ | 5.3 | kW |
| Thermostat-off mode | $P_{TO}$ | 0.024 | kW | Type of energy input | Electric | | |
| Standby mode | $P_{SB}$ | 0.014 | kW | | | | |
| Crankcase heater mode | $P_{CK}$ | 0.000 | kW | | | | |

| **Other items** | | | | | | | |
|---|---|---|---|---|---|---|---|
| Capacity control | variable | | | For air-to-water heat pumps: Rated air flow rate, outdoors | - | 5000 | $m^3/h$ |
| Sound power level, indoors/ outdoors | $L_{WA}$ | -/64 | dB | For water- or brine-to-water heat pumps: Rated brine or water flow rate, outdoor heat exchanger | - | N/A | $m^3/h$ |
| Annual energy consumption | $Q_{HE}$ | 8459 | kWh | | | | |
| For heat pump combination heater: | | | | | | | |
| **Declared load profile** | N/A | | | **Water heating energy efficiency** | $\eta_{wh}$ | N/A | % |
| Daily electricity consumption | $Q_{elec}$ | N/A | kWh | Daily fuel consumption | $Q_{fuel}$ | N/A | kWh |
| Annual electricity consumption | AEC | N/A | kWh | Annual fuel consumption | AFC | N/A | GJ |
| Contact details | See the back cover of the manual | | | | | | |

(*) For heat pump space heaters and heat pump combination heaters, the rated heat output Prated is equal to the design load for heating Pdesignh, and the rated heat output of a supplementary heater Psup is equal to the supplementary capacity for heating sup(Tj).
(**) If Cdh is not determined by measurement then the default degradation coefficient is Cdh = 0.9.

## Technical parameters

| | |
|---|---|
| Model(s): | 3-PH 14kW(heating 9kW);3-PH 14kW(heating 6kW); 3-PH 14kW(heating 3kW);3-PH 14kW |
| Air-to-water heat pump: | yes |
| Water-to-water heat pump: | no |
| Brine-to-water heat pump: | no |
| Low-temperature heat pump: | no |
| Equipped with a supplementary heater: | yes(for 3-PH 14kW(heating 9kW);3-PH 14kW(heating 6kW);3-PH 14kW(heating 3kW)) no(for 3-PH 14kW) |
| Heat pump combination heater: | no |
| Declared climate condition: | average |

Parameters are declared for low-temperature application.

| Item | Symbol | Value | Unit | Item | Symbol | Value | Unit |
|---|---|---|---|---|---|---|---|
| **Rated heat output (*)** | $P_{rated}$ | 14 | kW | **Seasonal space heating energy efficiency** | $\eta_s$ | 182 | % |
| Declared capacity for heating for part load at indoor temperature 20 °C and outdoor temperature $T_j$ | | | | Declared capacity for heating for part load at indoor temperature 20 °C and outdoor temperature $T_j$ | | | |
| $T_j$ = – 7°C | $P_{dh}$ | 12.4 | kW | $T_j$ = – 7°C | $COP_d$ | 2.80 | - |
| $T_j$ = + 2°C | $P_{dh}$ | 7.5 | kW | $T_j$ = + 2°C | $COP_d$ | 4.40 | - |
| $T_j$ = + 7°C | $P_{dh}$ | 5.1 | kW | $T_j$ = + 7°C | $COP_d$ | 6.38 | - |
| $T_j$ = + 12°C | $P_{dh}$ | 4.9 | kW | $T_j$ = + 12°C | $COP_d$ | 9.16 | - |
| $T_j$ = bivalent temperature | $P_{dh}$ | 12.4 | kW | $T_j$ = bivalent temperature | $COP_d$ | 2.80 | - |
| $T_j$ = operation limit temperature | $P_{dh}$ | 12.9 | kW | $T_j$ = operation limit temperature | $COP_d$ | 2.63 | - |
| For air-to-water heat pumps: $T_j$ = – 15°C (if TOL < – 20°C) | $P_{dh}$ | N/A | kW | For air-to-water heat pumps: $T_j$ = – 15°C (if TOL < – 20°C) | $COP_d$ | N/A | - |
| Bivalent temperature | $T_{biv}$ | -7 | °C | For air-to-water heat pumps: Operation limit temperature | TOL | -10 | °C |
| Cycling interval capacity for heating | $P_{cych}$ | N/A | kW | Cycling interval efficiency | $COP_{cyc}$ | N/A | - |
| Degradation co-efficient (**) | $C_{dh}$ | 0.9 | - | Heating water operating limit temperature | WTOL | 65 | °C |
| Power consumption in modes other than active mode | | | | Supplementary heater | | | |
| Off mode | $P_{OFF}$ | 0.014 | kW | Rated heat output (**) | $P_{sup}$ | 1.1 | kW |
| Thermostat-off mode | $P_{TO}$ | 0.024 | kW | Type of energy input | Electric | | |
| Standby mode | $P_{SB}$ | 0.014 | kW | | | | |
| Crankcase heater mode | $P_{CK}$ | 0.000 | kW | | | | |

| **Other items** | | | | | | | |
|---|---|---|---|---|---|---|---|
| Capacity control | variable | | | For air-to-water heat pumps: Rated air flow rate, outdoors | - | 5500 | $m^3/h$ |
| Sound power level, indoors/ outdoors | $L_{WA}$ | -/66 | dB | For water- or brine-to-water heat pumps: Rated brine or water flow rate, outdoor heat exchanger | - | N/A | $m^3/h$ |
| Annual energy consumption | $Q_{HE}$ | 6237 | kWh | | | | |
| For heat pump combination heater: | | | | | | | |
| **Declared load profile** | N/A | | | **Water heating energy efficiency** | $\eta_{wh}$ | N/A | % |
| Daily electricity consumption | $Q_{elec}$ | N/A | kWh | Daily fuel consumption | $Q_{fuel}$ | N/A | kWh |
| Annual electricity consumption | AEC | N/A | kWh | Annual fuel consumption | AFC | N/A | GJ |
| Contact details | See the back cover of the manual | | | | | | |

(*) For heat pump space heaters and heat pump combination heaters, the rated heat output Prated is equal to the design load for heating Pdesignh, and the rated heat output of a supplementary heater Psup is equal to the supplementary capacity for heating sup(Tj).
(**) If Cdh is not determined by measurement then the default degradation coefficient is Cdh = 0.9.

## Technical parameters

| | |
|---|---|
| Model(s): | 3-PH 14kW(heating 9kW);3-PH 14kW(heating 6kW); 3-PH 14kW(heating 3kW);3-PH 14kW |
| Air-to-water heat pump: | yes |
| Water-to-water heat pump: | no |
| Brine-to-water heat pump: | no |
| Low-temperature heat pump: | no |
| Equipped with a supplementary heater: | yes(for 3-PH 14kW(heating 9kW);3-PH 14kW(heating 6kW);3-PH 14kW(heating 3kW)) no(for 3-PH 14kW) |
| Heat pump combination heater: | no |
| Declared climate condition: | warmer |

Parameters are declared for low-temperature application.

| Item | Symbol | Value | Unit | Item | Symbol | Value | Unit |
|---|---|---|---|---|---|---|---|
| **Rated heat output (*)** | $P_{rated}$ | 12 | kW | **Seasonal space heating energy efficiency** | $\eta_s$ | 248 | % |
| Declared capacity for heating for part load at indoor temperature 20 °C and outdoor temperature $T_j$ | | | | Declared capacity for heating for part load at indoor temperature 20 °C and outdoor temperature $T_j$ | | | |
| $T_j$ = – 7°C | $P_{dh}$ | N/A | kW | $T_j$ = – 7°C | $COP_d$ | N/A | - |
| $T_j$ = + 2°C | $P_{dh}$ | 12.3 | kW | $T_j$ = + 2°C | $COP_d$ | 3.41 | - |
| $T_j$ = + 7°C | $P_{dh}$ | 8.0 | kW | $T_j$ = + 7°C | $COP_d$ | 5.61 | - |
| $T_j$ = + 12°C | $P_{dh}$ | 4.2 | kW | $T_j$ = + 12°C | $COP_d$ | 7.94 | - |
| $T_j$ = bivalent temperature | $P_{dh}$ | 8.0 | kW | $T_j$ = bivalent temperature | $COP_d$ | 5.61 | - |
| $T_j$ = operation limit temperature | $P_{dh}$ | 12.3 | kW | $T_j$ = operation limit temperature | $COP_d$ | 3.41 | - |
| For air-to-water heat pumps: $T_j$ = – 15°C (if TOL < – 20°C) | $P_{dh}$ | N/A | kW | For air-to-water heat pumps: $T_j$ = – 15°C (if TOL < – 20°C) | $COP_d$ | N/A | - |
| Bivalent temperature | $T_{biv}$ | 7 | °C | For air-to-water heat pumps: Operation limit temperature | TOL | 2 | °C |
| Cycling interval capacity for heating | $P_{cych}$ | N/A | kW | Cycling interval efficiency | $COP_{cyc}$ | N/A | - |
| Degradation co-efficient (**) | $C_{dh}$ | 0.9 | - | Heating water operating limit temperature | WTOL | 65 | °C |
| Power consumption in modes other than active mode | | | | Supplementary heater | | | |
| Off mode | $P_{OFF}$ | 0.014 | kW | Rated heat output (**) | $P_{sup}$ | 0.0 | kW |
| Thermostat-off mode | $P_{TO}$ | 0.024 | kW | Type of energy input | Electric | | |
| Standby mode | $P_{SB}$ | 0.014 | kW | | | | |
| Crankcase heater mode | $P_{CK}$ | 0.000 | kW | | | | |

| **Other items** | | | | | | | |
|---|---|---|---|---|---|---|---|
| Capacity control | variable | | | For air-to-water heat pumps: Rated air flow rate, outdoors | - | 5500 | $m^3/h$ |
| Sound power level, indoors/ outdoors | $L_{WA}$ | -/66 | dB | For water- or brine-to-water heat pumps: Rated brine or water flow rate, outdoor heat exchanger | - | N/A | $m^3/h$ |
| Annual energy consumption | $Q_{HE}$ | 2638 | kWh | | | | |
| For heat pump combination heater: | | | | | | | |
| **Declared load profile** | N/A | | | **Water heating energy efficiency** | $\eta_{wh}$ | N/A | % |
| Daily electricity consumption | $Q_{elec}$ | N/A | kWh | Daily fuel consumption | $Q_{fuel}$ | N/A | kWh |
| Annual electricity consumption | AEC | N/A | kWh | Annual fuel consumption | AFC | N/A | GJ |
| Contact details | See the back cover of the manual | | | | | | |

(*) For heat pump space heaters and heat pump combination heaters, the rated heat output Prated is equal to the design load for heating Pdesignh, and the rated heat output of a supplementary heater Psup is equal to the supplementary capacity for heating sup(Tj).
(**) If Cdh is not determined by measurement then the default degradation coefficient is Cdh = 0.9.

## Technical parameters

| | |
|---|---|
| Model(s): | 3-PH 14kW(heating 9kW);3-PH 14kW(heating 6kW); 3-PH 14kW(heating 3kW);3-PH 14kW |
| Air-to-water heat pump: | yes |
| Water-to-water heat pump: | no |
| Brine-to-water heat pump: | no |
| Low-temperature heat pump: | no |
| Equipped with a supplementary heater: | yes(for 3-PH 14kW(heating 9kW);3-PH 14kW(heating 6kW);3-PH 14kW(heating 3kW)) no(for 3-PH 14kW) |
| Heat pump combination heater: | no |
| Declared climate condition: | colder |

Parameters are declared for low-temperature application.

| Item | Symbol | Value | Unit | Item | Symbol | Value | Unit |
|---|---|---|---|---|---|---|---|
| **Rated heat output (*)** | $P_{rated}$ | 13 | kW | **Seasonal space heating energy efficiency** | $\eta_s$ | 156 | % |
| Declared capacity for heating for part load at indoor temperature 20 °C and outdoor temperature $T_j$ | | | | Declared capacity for heating for part load at indoor temperature 20 °C and outdoor temperature $T_j$ | | | |
| $T_j$ = – 7°C | $P_{dh}$ | 8.3 | kW | $T_j$ = – 7°C | $COP_d$ | 3.36 | - |
| $T_j$ = + 2°C | $P_{dh}$ | 4.7 | kW | $T_j$ = + 2°C | $COP_d$ | 4.73 | - |
| $T_j$ = + 7°C | $P_{dh}$ | 3.4 | kW | $T_j$ = + 7°C | $COP_d$ | 6.11 | - |
| $T_j$ = + 12°C | $P_{dh}$ | 3.8 | kW | $T_j$ = + 12°C | $COP_d$ | 7.98 | - |
| $T_j$ = bivalent temperature | $P_{dh}$ | 10.7 | kW | $T_j$ = bivalent temperature | $COP_d$ | 2.61 | - |
| $T_j$ = operation limit temperature | $P_{dh}$ | 7.9 | kW | $T_j$ = operation limit temperature | $COP_d$ | 2.10 | - |
| For air-to-water heat pumps: $T_j$ = – 15°C (if TOL < – 20°C) | $P_{dh}$ | N/A | kW | For air-to-water heat pumps: $T_j$ = – 15°C (if TOL < – 20°C) | $COP_d$ | N/A | - |
| Bivalent temperature | $T_{biv}$ | -15 | °C | For air-to-water heat pumps: Operation limit temperature | TOL | -22 | °C |
| Cycling interval capacity for heating | $P_{cych}$ | N/A | kW | Cycling interval efficiency | $COP_{cyc}$ | N/A | - |
| Degradation co-efficient (**) | $C_{dh}$ | 0.9 | - | Heating water operating limit temperature | WTOL | 65 | °C |
| Power consumption in modes other than active mode | | | | Supplementary heater | | | |
| Off mode | $P_{OFF}$ | 0.014 | kW | Rated heat output (**) | $P_{sup}$ | 5.1 | kW |
| Thermostat-off mode | $P_{TO}$ | 0.024 | kW | Type of energy input | Electric | | |
| Standby mode | $P_{SB}$ | 0.014 | kW | | | | |
| Crankcase heater mode | $P_{CK}$ | 0.000 | kW | | | | |

| **Other items** | | | | | | | |
|---|---|---|---|---|---|---|---|
| Capacity control | variable | | | For air-to-water heat pumps: Rated air flow rate, outdoors | - | 5500 | $m^3/h$ |
| Sound power level, indoors/ outdoors | $L_{WA}$ | -/66 | dB | For water- or brine-to-water heat pumps: Rated brine or water flow rate, outdoor heat exchanger | - | N/A | $m^3/h$ |
| Annual energy consumption | $Q_{HE}$ | 8082 | kWh | | | | |
| For heat pump combination heater: | | | | | | | |
| **Declared load profile** | N/A | | | **Water heating energy efficiency** | $\eta_{wh}$ | N/A | % |
| Daily electricity consumption | $Q_{elec}$ | N/A | kWh | Daily fuel consumption | $Q_{fuel}$ | N/A | kWh |
| Annual electricity consumption | AEC | N/A | kWh | Annual fuel consumption | AFC | N/A | GJ |
| Contact details | See the back cover of the manual | | | | | | |

(*) For heat pump space heaters and heat pump combination heaters, the rated heat output Prated is equal to the design load for heating Pdesignh, and the rated heat output of a supplementary heater Psup is equal to the supplementary capacity for heating sup(Tj).
(**) If Cdh is not determined by measurement then the default degradation coefficient is Cdh = 0.9.

## Technical parameters

| | |
|---|---|
| Model(s): | 3-PH 14kW(heating 9kW);3-PH 14kW(heating 6kW); 3-PH 14kW(heating 3kW);3-PH 14kW |
| Air-to-water heat pump: | yes |
| Water-to-water heat pump: | no |
| Brine-to-water heat pump: | no |
| Low-temperature heat pump: | no |
| Equipped with a supplementary heater: | yes(for 3-PH 14kW(heating 9kW);3-PH 14kW(heating 6kW);3-PH 14kW(heating 3kW)) no(for 3-PH 14kW) |
| Heat pump combination heater: | no |
| Declared climate condition: | average |

Parameters are declared for medium-temperature application.

| Item | Symbol | Value | Unit | Item | Symbol | Value | Unit |
|---|---|---|---|---|---|---|---|
| **Rated heat output (*)** | $P_{rated}$ | 12 | kW | **Seasonal space heating energy efficiency** | $\eta_s$ | 135 | % |
| Declared capacity for heating for part load at indoor temperature 20 °C and outdoor temperature $T_j$ | | | | Declared capacity for heating for part load at indoor temperature 20 °C and outdoor temperature $T_j$ | | | |
| $T_j$ = – 7°C | $P_{dh}$ | 10.9 | kW | $T_j$ = – 7°C | $COP_d$ | 2.03 | - |
| $T_j$ = + 2°C | $P_{dh}$ | 7.1 | kW | $T_j$ = + 2°C | $COP_d$ | 3.35 | - |
| $T_j$ = + 7°C | $P_{dh}$ | 4.8 | kW | $T_j$ = + 7°C | $COP_d$ | 4.67 | - |
| $T_j$ = + 12°C | $P_{dh}$ | 4.0 | kW | $T_j$ = + 12°C | $COP_d$ | 7.27 | - |
| $T_j$ = bivalent temperature | $P_{dh}$ | 10.9 | kW | $T_j$ = bivalent temperature | $COP_d$ | 2.03 | - |
| $T_j$ = operation limit temperature | $P_{dh}$ | 10.0 | kW | $T_j$ = operation limit temperature | $COP_d$ | 1.79 | - |
| For air-to-water heat pumps: $T_j$ = – 15°C (if TOL < – 20°C) | $P_{dh}$ | N/A | kW | For air-to-water heat pumps: $T_j$ = – 15°C (if TOL < – 20°C) | $COP_d$ | N/A | - |
| Bivalent temperature | $T_{biv}$ | -7 | °C | For air-to-water heat pumps: Operation limit temperature | TOL | -10 | °C |
| Cycling interval capacity for heating | $P_{cych}$ | N/A | kW | Cycling interval efficiency | $COP_{cyc}$ | N/A | - |
| Degradation co-efficient (**) | $C_{dh}$ | 0.9 | - | Heating water operating limit temperature | WTOL | 65 | °C |
| Power consumption in modes other than active mode | | | | Supplementary heater | | | |
| Off mode | $P_{OFF}$ | 0.014 | kW | Rated heat output (**) | $P_{sup}$ | 2.0 | kW |
| Thermostat-off mode | $P_{TO}$ | 0.024 | kW | Type of energy input | Electric | | |
| Standby mode | $P_{SB}$ | 0.014 | kW | | | | |
| Crankcase heater mode | $P_{CK}$ | 0.000 | kW | | | | |

| **Other items** | | | | | | | |
|---|---|---|---|---|---|---|---|
| Capacity control | variable | | | For air-to-water heat pumps: Rated air flow rate, outdoors | - | 5500 | $m^3/h$ |
| Sound power level, indoors/ outdoors | $L_{WA}$ | -/66 | dB | For water- or brine-to-water heat pumps: Rated brine or water flow rate, outdoor heat exchanger | - | N/A | $m^3/h$ |
| Annual energy consumption | $Q_{HE}$ | 7384 | kWh | | | | |
| For heat pump combination heater: | | | | | | | |
| **Declared load profile** | N/A | | | **Water heating energy efficiency** | $\eta_{wh}$ | N/A | % |
| Daily electricity consumption | $Q_{elec}$ | N/A | kWh | Daily fuel consumption | $Q_{fuel}$ | N/A | kWh |
| Annual electricity consumption | AEC | N/A | kWh | Annual fuel consumption | AFC | N/A | GJ |
| Contact details | See the back cover of the manual | | | | | | |

(*) For heat pump space heaters and heat pump combination heaters, the rated heat output Prated is equal to the design load for heating Pdesignh, and the rated heat output of a supplementary heater Psup is equal to the supplementary capacity for heating sup(Tj).
(**) If Cdh is not determined by measurement then the default degradation coefficient is Cdh = 0.9.

## Technical parameters

| | |
|---|---|
| Model(s): | 3-PH 14kW(heating 9kW);3-PH 14kW(heating 6kW); 3-PH 14kW(heating 3kW);3-PH 14kW |
| Air-to-water heat pump: | yes |
| Water-to-water heat pump: | no |
| Brine-to-water heat pump: | no |
| Low-temperature heat pump: | no |
| Equipped with a supplementary heater: | yes(for 3-PH 14kW(heating 9kW);3-PH 14kW(heating 6kW);3-PH 14kW(heating 3kW)) no(for 3-PH 14kW) |
| Heat pump combination heater: | no |
| Declared climate condition: | warmer |
| Parameters are declared for medium-temperature application. | |

| Item | Symbol | Value | Unit | Item | Symbol | Value | Unit |
|---|---|---|---|---|---|---|---|
| **Rated heat output (*)** | $P_{rated}$ | 14 | kW | **Seasonal space heating energy efficiency** | $\eta_s$ | 170 | % |
| Declared capacity for heating for part load at indoor temperature 20 °C and outdoor temperature $T_j$ | | | | Declared capacity for heating for part load at indoor temperature 20 °C and outdoor temperature $T_j$ | | | |
| $T_j$ = – 7°C | $P_{dh}$ | N/A | kW | $T_j$ = – 7°C | $COP_d$ | N/A | - |
| $T_j$ = + 2°C | $P_{dh}$ | 13.1 | kW | $T_j$ = + 2°C | $COP_d$ | 2.25 | - |
| $T_j$ = + 7°C | $P_{dh}$ | 9.0 | kW | $T_j$ = + 7°C | $COP_d$ | 3.61 | - |
| $T_j$ = + 12°C | $P_{dh}$ | 4.1 | kW | $T_j$ = + 12°C | $COP_d$ | 5.94 | - |
| $T_j$ = bivalent temperature | $P_{dh}$ | 9.0 | kW | $T_j$ = bivalent temperature | $COP_d$ | 3.61 | - |
| $T_j$ = operation limit temperature | $P_{dh}$ | 13.1 | kW | $T_j$ = operation limit temperature | $COP_d$ | 2.25 | - |
| For air-to-water heat pumps: $T_j$ = – 15°C (if TOL < – 20°C) | $P_{dh}$ | N/A | kW | For air-to-water heat pumps: $T_j$ = – 15°C (if TOL < – 20°C) | $COP_d$ | N/A | - |
| Bivalent temperature | $T_{biv}$ | 7 | °C | For air-to-water heat pumps: Operation limit temperature | TOL | 2 | °C |
| Cycling interval capacity for heating | $P_{cych}$ | N/A | kW | Cycling interval efficiency | $COP_{cyc}$ | N/A | - |
| Degradation co-efficient (**) | $C_{dh}$ | 0.9 | - | Heating water operating limit temperature | WTOL | 65 | °C |
| Power consumption in modes other than active mode | | | | Supplementary heater | | | |
| Off mode | $P_{OFF}$ | 0.014 | kW | Rated heat output (**) | $P_{sup}$ | 0.9 | kW |
| Thermostat-off mode | $P_{TO}$ | 0.024 | kW | Type of energy input | Electric | | |
| Standby mode | $P_{SB}$ | 0.014 | kW | | | | |
| Crankcase heater mode | $P_{CK}$ | 0.000 | kW | | | | |

| **Other items** | | | | | | | |
|---|---|---|---|---|---|---|---|
| Capacity control | variable | | | For air-to-water heat pumps: Rated air flow rate, outdoors | - | 5500 | $m^3/h$ |
| Sound power level, indoors/ outdoors | $L_{WA}$ | -/66 | dB | For water- or brine-to-water heat pumps: Rated brine or water flow rate, outdoor heat exchanger | - | N/A | $m^3/h$ |
| Annual energy consumption | $Q_{HE}$ | 4320 | kWh | | | | |
| For heat pump combination heater: | | | | | | | |
| **Declared load profile** | N/A | | | **Water heating energy efficiency** | $\eta_{wh}$ | N/A | % |
| Daily electricity consumption | $Q_{elec}$ | N/A | kWh | Daily fuel consumption | $Q_{fuel}$ | N/A | kWh |
| Annual electricity consumption | AEC | N/A | kWh | Annual fuel consumption | AFC | N/A | GJ |
| Contact details | See the back cover of the manual | | | | | | |

(*) For heat pump space heaters and heat pump combination heaters, the rated heat output Prated is equal to the design load for heating Pdesignh, and the rated heat output of a supplementary heater Psup is equal to the supplementary capacity for heating sup(Tj).
(**) If Cdh is not determined by measurement then the default degradation coefficient is Cdh = 0.9.

## Technical parameters

| | |
|---|---|
| Model(s): | 3-PH 14kW(heating 9kW);3-PH 14kW(heating 6kW); 3-PH 14kW(heating 3kW);3-PH 14kW |
| Air-to-water heat pump: | yes |
| Water-to-water heat pump: | no |
| Brine-to-water heat pump: | no |
| Low-temperature heat pump: | no |
| Equipped with a supplementary heater: | yes(for 3-PH 14kW(heating 9kW);3-PH 14kW(heating 6kW);3-PH 14kW(heating 3kW)) no(for 3-PH 14kW) |
| Heat pump combination heater: | no |
| Declared climate condition: | colder |

Parameters are declared for medium-temperature application.

| Item | Symbol | Value | Unit | Item | Symbol | Value | Unit |
|---|---|---|---|---|---|---|---|
| **Rated heat output (*)** | $P_{rated}$ | 11 | kW | **Seasonal space heating energy efficiency** | $\eta_s$ | 117 | % |
| Declared capacity for heating for part load at indoor temperature 20 °C and outdoor temperature $T_j$ | | | | Declared capacity for heating for part load at indoor temperature 20 °C and outdoor temperature $T_j$ | | | |
| $T_j$ = – 7°C | $P_{dh}$ | 7.2 | kW | $T_j$ = – 7°C | $COP_d$ | 2.56 | - |
| $T_j$ = + 2°C | $P_{dh}$ | 4.3 | kW | $T_j$ = + 2°C | $COP_d$ | 3.62 | - |
| $T_j$ = + 7°C | $P_{dh}$ | 3.1 | kW | $T_j$ = + 7°C | $COP_d$ | 4.77 | - |
| $T_j$ = + 12°C | $P_{dh}$ | 3.6 | kW | $T_j$ = + 12°C | $COP_d$ | 6.40 | - |
| $T_j$ = bivalent temperature | $P_{dh}$ | 8.9 | kW | $T_j$ = bivalent temperature | $COP_d$ | 1.82 | - |
| $T_j$ = operation limit temperature | $P_{dh}$ | 4.4 | kW | $T_j$ = operation limit temperature | $COP_d$ | 1.16 | - |
| For air-to-water heat pumps: $T_j$ = – 15°C (if TOL < – 20°C) | $P_{dh}$ | N/A | kW | For air-to-water heat pumps: $T_j$ = – 15°C (if TOL < – 20°C) | $COP_d$ | N/A | - |
| Bivalent temperature | $T_{biv}$ | -15 | °C | For air-to-water heat pumps: Operation limit temperature | TOL | -22 | °C |
| Cycling interval capacity for heating | $P_{cych}$ | N/A | kW | Cycling interval efficiency | $COP_{cyc}$ | N/A | - |
| Degradation co-efficient (**) | $C_{dh}$ | 0.9 | - | Heating water operating limit temperature | WTOL | 65 | °C |
| Power consumption in modes other than active mode | | | | Supplementary heater | | | |
| Off mode | $P_{OFF}$ | 0.014 | kW | Rated heat output (**) | $P_{sup}$ | 6.6 | kW |
| Thermostat-off mode | $P_{TO}$ | 0.024 | kW | Type of energy input | Electric | | |
| Standby mode | $P_{SB}$ | 0.014 | kW | | | | |
| Crankcase heater mode | $P_{CK}$ | 0.000 | kW | | | | |

| **Other items** | | | | | | | |
|---|---|---|---|---|---|---|---|
| Capacity control | variable | | | For air-to-water heat pumps: Rated air flow rate, outdoors | - | 5500 | $m^3/h$ |
| Sound power level, indoors/ outdoors | $L_{WA}$ | -/66 | dB | For water- or brine-to-water heat pumps: Rated brine or water flow rate, outdoor heat exchanger | - | N/A | $m^3/h$ |
| Annual energy consumption | $Q_{HE}$ | 8967 | kWh | | | | |
| For heat pump combination heater: | | | | | | | |
| **Declared load profile** | N/A | | | **Water heating energy efficiency** | $\eta_{wh}$ | N/A | % |
| Daily electricity consumption | $Q_{elec}$ | N/A | kWh | Daily fuel consumption | $Q_{fuel}$ | N/A | kWh |
| Annual electricity consumption | AEC | N/A | kWh | Annual fuel consumption | AFC | N/A | GJ |
| Contact details | See the back cover of the manual | | | | | | |

(*) For heat pump space heaters and heat pump combination heaters, the rated heat output Prated is equal to the design load for heating Pdesignh, and the rated heat output of a supplementary heater Psup is equal to the supplementary capacity for heating sup(Tj).
(**) If Cdh is not determined by measurement then the default degradation coefficient is Cdh = 0.9.

## Technical parameters

| | |
|---|---|
| Model(s): | 3-PH 16kW(heating 9kW);3-PH 16kW(heating 6kW); 3-PH 16kW(heating 3kW);3-PH 16kW |
| Air-to-water heat pump: | yes |
| Water-to-water heat pump: | no |
| Brine-to-water heat pump: | no |
| Low-temperature heat pump: | no |
| Equipped with a supplementary heater: | yes(for 3-PH 16kW(heating 9kW);3-PH 16kW(heating 6kW);3-PH 16kW(heating 3kW)) no(for 3-PH 16kW) |
| Heat pump combination heater: | no |
| Declared climate condition: | average |

Parameters are declared for low-temperature application.

| Item | Symbol | Value | Unit | Item | Symbol | Value | Unit |
|---|---|---|---|---|---|---|---|
| **Rated heat output (*)** | $P_{rated}$ | 15 | kW | **Seasonal space heating energy efficiency** | $\eta_s$ | 179 | % |
| Declared capacity for heating for part load at indoor temperature 20 °C and outdoor temperature $T_j$ | | | | Declared capacity for heating for part load at indoor temperature 20 °C and outdoor temperature $T_j$ | | | |
| $T_j$ = – 7°C | $P_{dh}$ | 13.4 | kW | $T_j$ = – 7°C | $COP_d$ | 2.60 | - |
| $T_j$ = + 2°C | $P_{dh}$ | 8.0 | kW | $T_j$ = + 2°C | $COP_d$ | 4.39 | - |
| $T_j$ = + 7°C | $P_{dh}$ | 5.4 | kW | $T_j$ = + 7°C | $COP_d$ | 6.44 | - |
| $T_j$ = + 12°C | $P_{dh}$ | 4.6 | kW | $T_j$ = + 12°C | $COP_d$ | 8.92 | - |
| $T_j$ = bivalent temperature | $P_{dh}$ | 13.4 | kW | $T_j$ = bivalent temperature | $COP_d$ | 2.60 | - |
| $T_j$ = operation limit temperature | $P_{dh}$ | 13.4 | kW | $T_j$ = operation limit temperature | $COP_d$ | 2.44 | - |
| For air-to-water heat pumps: $T_j$ = – 15°C (if TOL < – 20°C) | $P_{dh}$ | N/A | kW | For air-to-water heat pumps: $T_j$ = – 15°C (if TOL < – 20°C) | $COP_d$ | N/A | - |
| Bivalent temperature | $T_{biv}$ | -7 | °C | For air-to-water heat pumps: Operation limit temperature | TOL | -10 | °C |
| Cycling interval capacity for heating | $P_{cych}$ | N/A | kW | Cycling interval efficiency | $COP_{cyc}$ | N/A | - |
| Degradation co-efficient (**) | $C_{dh}$ | 0.9 | - | Heating water operating limit temperature | WTOL | 65 | °C |
| Power consumption in modes other than active mode | | | | Supplementary heater | | | |
| Off mode | $P_{OFF}$ | 0.014 | kW | Rated heat output (**) | $P_{sup}$ | 1.6 | kW |
| Thermostat-off mode | $P_{TO}$ | 0.024 | kW | Type of energy input | Electric | | |
| Standby mode | $P_{SB}$ | 0.014 | kW | | | | |
| Crankcase heater mode | $P_{CK}$ | 0.000 | kW | | | | |

| **Other items** | | | | | | | |
|---|---|---|---|---|---|---|---|
| Capacity control | variable | | | For air-to-water heat pumps: Rated air flow rate, outdoors | - | 6000 | $m^3/h$ |
| Sound power level, indoors/ outdoors | $L_{WA}$ | -/68 | dB | For water- or brine-to-water heat pumps: Rated brine or water flow rate, outdoor heat exchanger | - | N/A | $m^3/h$ |
| Annual energy consumption | $Q_{HE}$ | 6838 | kWh | | | | |
| For heat pump combination heater: | | | | | | | |
| **Declared load profile** | N/A | | | **Water heating energy efficiency** | $\eta_{wh}$ | N/A | % |
| Daily electricity consumption | $Q_{elec}$ | N/A | kWh | Daily fuel consumption | $Q_{fuel}$ | N/A | kWh |
| Annual electricity consumption | AEC | N/A | kWh | Annual fuel consumption | AFC | N/A | GJ |
| Contact details | See the back cover of the manual | | | | | | |

(*) For heat pump space heaters and heat pump combination heaters, the rated heat output Prated is equal to the design load for heating Pdesignh, and the rated heat output of a supplementary heater Psup is equal to the supplementary capacity for heating sup(Tj).
(**) If Cdh is not determined by measurement then the default degradation coefficient is Cdh = 0.9.

## Technical parameters

| | |
|---|---|
| Model(s): | 3-PH 16kW(heating 9kW);3-PH 16kW(heating 6kW); 3-PH 16kW(heating 3kW);3-PH 16kW |
| Air-to-water heat pump: | yes |
| Water-to-water heat pump: | no |
| Brine-to-water heat pump: | no |
| Low-temperature heat pump: | no |
| Equipped with a supplementary heater: | yes(for 3-PH 16kW(heating 9kW);3-PH 16kW(heating 6kW);3-PH 16kW(heating 3kW)) no(for 3-PH 16kW) |
| Heat pump combination heater: | no |
| Declared climate condition: | warmer |

Parameters are declared for low-temperature application.

| Item | Symbol | Value | Unit | Item | Symbol | Value | Unit |
|---|---|---|---|---|---|---|---|
| **Rated heat output (*)** | $P_{rated}$ | 13 | kW | **Seasonal space heating energy efficiency** | $\eta_s$ | 239 | % |
| Declared capacity for heating for part load at indoor temperature 20 °C and outdoor temperature $T_j$ | | | | Declared capacity for heating for part load at indoor temperature 20 °C and outdoor temperature $T_j$ | | | |
| $T_j$ = – 7°C | $P_{dh}$ | N/A | kW | $T_j$ = – 7°C | $COP_d$ | N/A | - |
| $T_j$ = + 2°C | $P_{dh}$ | 13.3 | kW | $T_j$ = + 2°C | $COP_d$ | 3.33 | - |
| $T_j$ = + 7°C | $P_{dh}$ | 8.6 | kW | $T_j$ = + 7°C | $COP_d$ | 5.20 | - |
| $T_j$ = + 12°C | $P_{dh}$ | 4.8 | kW | $T_j$ = + 12°C | $COP_d$ | 7.95 | - |
| $T_j$ = bivalent temperature | $P_{dh}$ | 8.6 | kW | $T_j$ = bivalent temperature | $COP_d$ | 5.20 | - |
| $T_j$ = operation limit temperature | $P_{dh}$ | 13.3 | kW | $T_j$ = operation limit temperature | $COP_d$ | 3.33 | - |
| For air-to-water heat pumps: $T_j$ = – 15°C (if TOL < – 20°C) | $P_{dh}$ | N/A | kW | For air-to-water heat pumps: $T_j$ = – 15°C (if TOL < – 20°C) | $COP_d$ | N/A | - |
| Bivalent temperature | $T_{biv}$ | 7 | °C | For air-to-water heat pumps: Operation limit temperature | TOL | 2 | °C |
| Cycling interval capacity for heating | $P_{cych}$ | N/A | kW | Cycling interval efficiency | $COP_{cyc}$ | N/A | - |
| Degradation co-efficient (**) | $C_{dh}$ | 0.9 | - | Heating water operating limit temperature | WTOL | 65 | °C |
| Power consumption in modes other than active mode | | | | Supplementary heater | | | |
| Off mode | $P_{OFF}$ | 0.014 | kW | Rated heat output (**) | $P_{sup}$ | 0.0 | kW |
| Thermostat-off mode | $P_{TO}$ | 0.024 | kW | Type of energy input | Electric | | |
| Standby mode | $P_{SB}$ | 0.014 | kW | | | | |
| Crankcase heater mode | $P_{CK}$ | 0.000 | kW | | | | |

| **Other items** | | | | | | | |
|---|---|---|---|---|---|---|---|
| Capacity control | variable | | | For air-to-water heat pumps: Rated air flow rate, outdoors | - | 6000 | $m^3/h$ |
| Sound power level, indoors/ outdoors | $L_{WA}$ | -/68 | dB | For water- or brine-to-water heat pumps: Rated brine or water flow rate, outdoor heat exchanger | - | N/A | $m^3/h$ |
| Annual energy consumption | $Q_{HE}$ | 2933 | kWh | | | | |
| For heat pump combination heater: | | | | | | | |
| **Declared load profile** | N/A | | | **Water heating energy efficiency** | $\eta_{wh}$ | N/A | % |
| Daily electricity consumption | $Q_{elec}$ | N/A | kWh | Daily fuel consumption | $Q_{fuel}$ | N/A | kWh |
| Annual electricity consumption | AEC | N/A | kWh | Annual fuel consumption | AFC | N/A | GJ |
| Contact details | See the back cover of the manual | | | | | | |

(*) For heat pump space heaters and heat pump combination heaters, the rated heat output Prated is equal to the design load for heating Pdesignh, and the rated heat output of a supplementary heater Psup is equal to the supplementary capacity for heating sup(Tj).
(**) If Cdh is not determined by measurement then the default degradation coefficient is Cdh = 0.9.

## Technical parameters

| | |
|---|---|
| Model(s): | 3-PH 16kW(heating 9kW);3-PH 16kW(heating 6kW); 3-PH 16kW(heating 3kW);3-PH 16kW |
| Air-to-water heat pump: | yes |
| Water-to-water heat pump: | no |
| Brine-to-water heat pump: | no |
| Low-temperature heat pump: | no |
| Equipped with a supplementary heater: | yes(for 3-PH 16kW(heating 9kW);3-PH 16kW(heating 6kW);3-PH 16kW(heating 3kW)) no(for 3-PH 16kW) |
| Heat pump combination heater: | no |
| Declared climate condition: | colder |

Parameters are declared for low-temperature application.

| Item | Symbol | Value | Unit | Item | Symbol | Value | Unit |
|---|---|---|---|---|---|---|---|
| **Rated heat output (*)** | $P_{rated}$ | 14 | kW | **Seasonal space heating energy efficiency** | $\eta_s$ | 156 | % |
| Declared capacity for heating for part load at indoor temperature 20 °C and outdoor temperature $T_j$ | | | | Declared capacity for heating for part load at indoor temperature 20 °C and outdoor temperature $T_j$ | | | |
| $T_j$ = – 7°C | $P_{dh}$ | 9.1 | kW | $T_j$ = – 7°C | $COP_d$ | 3.32 | - |
| $T_j$ = + 2°C | $P_{dh}$ | 5.0 | kW | $T_j$ = + 2°C | $COP_d$ | 4.88 | - |
| $T_j$ = + 7°C | $P_{dh}$ | 4.2 | kW | $T_j$ = + 7°C | $COP_d$ | 6.50 | - |
| $T_j$ = + 12°C | $P_{dh}$ | 3.7 | kW | $T_j$ = + 12°C | $COP_d$ | 7.59 | - |
| $T_j$ = bivalent temperature | $P_{dh}$ | 11.3 | kW | $T_j$ = bivalent temperature | $COP_d$ | 2.28 | - |
| $T_j$ = operation limit temperature | $P_{dh}$ | 9.8 | kW | $T_j$ = operation limit temperature | $COP_d$ | 1.89 | - |
| For air-to-water heat pumps: $T_j$ = – 15°C (if TOL < – 20°C) | $P_{dh}$ | N/A | kW | For air-to-water heat pumps: $T_j$ = – 15°C (if TOL < – 20°C) | $COP_d$ | N/A | - |
| Bivalent temperature | $T_{biv}$ | -15 | °C | For air-to-water heat pumps: Operation limit temperature | TOL | -22 | °C |
| Cycling interval capacity for heating | $P_{cych}$ | N/A | kW | Cycling interval efficiency | $COP_{cyc}$ | N/A | - |
| Degradation co-efficient (**) | $C_{dh}$ | 0.9 | - | Heating water operating limit temperature | WTOL | 65 | °C |
| Power consumption in modes other than active mode | | | | Supplementary heater | | | |
| Off mode | $P_{OFF}$ | 0.014 | kW | Rated heat output (**) | $P_{sup}$ | 4.2 | kW |
| Thermostat-off mode | $P_{TO}$ | 0.024 | kW | Type of energy input | Electric | | |
| Standby mode | $P_{SB}$ | 0.014 | kW | | | | |
| Crankcase heater mode | $P_{CK}$ | 0.000 | kW | | | | |

| **Other items** | | | | | | | |
|---|---|---|---|---|---|---|---|
| Capacity control | variable | | | For air-to-water heat pumps: Rated air flow rate, outdoors | - | 6000 | $m^3/h$ |
| Sound power level, indoors/ outdoors | $L_{WA}$ | -/68 | dB | For water- or brine-to-water heat pumps: Rated brine or water flow rate, outdoor heat exchanger | - | N/A | $m^3/h$ |
| Annual energy consumption | $Q_{HE}$ | 8597 | kWh | | | | |
| For heat pump combination heater: | | | | | | | |
| **Declared load profile** | N/A | | | **Water heating energy efficiency** | $\eta_{wh}$ | N/A | % |
| Daily electricity consumption | $Q_{elec}$ | N/A | kWh | Daily fuel consumption | $Q_{fuel}$ | N/A | kWh |
| Annual electricity consumption | AEC | N/A | kWh | Annual fuel consumption | AFC | N/A | GJ |
| Contact details | See the back cover of the manual | | | | | | |

(*) For heat pump space heaters and heat pump combination heaters, the rated heat output Prated is equal to the design load for heating Pdesignh, and the rated heat output of a supplementary heater Psup is equal to the supplementary capacity for heating sup(Tj).
(**) If Cdh is not determined by measurement then the default degradation coefficient is Cdh = 0.9.

## Technical parameters

| | |
|---|---|
| Model(s): | 3-PH 16kW(heating 9kW);3-PH 16kW(heating 6kW); 3-PH 16kW(heating 3kW);3-PH 16kW |
| Air-to-water heat pump: | yes |
| Water-to-water heat pump: | no |
| Brine-to-water heat pump: | no |
| Low-temperature heat pump: | no |
| Equipped with a supplementary heater: | yes(for 3-PH 16kW(heating 9kW);3-PH 16kW(heating 6kW);3-PH 16kW(heating 3kW)) no(for 3-PH 16kW) |
| Heat pump combination heater: | no |
| Declared climate condition: | average |

Parameters are declared for medium-temperature application.

| Item | Symbol | Value | Unit | Item | Symbol | Value | Unit |
|---|---|---|---|---|---|---|---|
| **Rated heat output (*)** | $P_{rated}$ | 13 | kW | **Seasonal space heating energy efficiency** | $\eta_s$ | 136 | % |
| Declared capacity for heating for part load at indoor temperature 20 °C and outdoor temperature $T_j$ | | | | Declared capacity for heating for part load at indoor temperature 20 °C and outdoor temperature $T_j$ | | | |
| $T_j$ = – 7°C | $P_{dh}$ | 11.3 | kW | $T_j$ = – 7°C | $COP_d$ | 2.04 | - |
| $T_j$ = + 2°C | $P_{dh}$ | 7.3 | kW | $T_j$ = + 2°C | $COP_d$ | 3.33 | - |
| $T_j$ = + 7°C | $P_{dh}$ | 4.8 | kW | $T_j$ = + 7°C | $COP_d$ | 4.81 | - |
| $T_j$ = + 12°C | $P_{dh}$ | 4.0 | kW | $T_j$ = + 12°C | $COP_d$ | 7.36 | - |
| $T_j$ = bivalent temperature | $P_{dh}$ | 11.3 | kW | $T_j$ = bivalent temperature | $COP_d$ | 2.04 | - |
| $T_j$ = operation limit temperature | $P_{dh}$ | 11.3 | kW | $T_j$ = operation limit temperature | $COP_d$ | 1.78 | - |
| For air-to-water heat pumps: $T_j$ = – 15°C (if TOL < – 20°C) | $P_{dh}$ | N/A | kW | For air-to-water heat pumps: $T_j$ = – 15°C (if TOL < – 20°C) | $COP_d$ | N/A | - |
| Bivalent temperature | $T_{biv}$ | -7 | °C | For air-to-water heat pumps: Operation limit temperature | TOL | -10 | °C |
| Cycling interval capacity for heating | $P_{cych}$ | N/A | kW | Cycling interval efficiency | $COP_{cyc}$ | N/A | - |
| Degradation co-efficient (**) | $C_{dh}$ | 0.9 | - | Heating water operating limit temperature | WTOL | 65 | °C |
| Power consumption in modes other than active mode | | | | Supplementary heater | | | |
| Off mode | $P_{OFF}$ | 0.014 | kW | Rated heat output (**) | $P_{sup}$ | 1.7 | kW |
| Thermostat-off mode | $P_{TO}$ | 0.024 | kW | Type of energy input | Electric | | |
| Standby mode | $P_{SB}$ | 0.014 | kW | | | | |
| Crankcase heater mode | $P_{CK}$ | 0.000 | kW | | | | |

| **Other items** | | | | | | | |
|---|---|---|---|---|---|---|---|
| Capacity control | variable | | | For air-to-water heat pumps: Rated air flow rate, outdoors | - | 6000 | $m^3/h$ |
| Sound power level, indoors/ outdoors | $L_{WA}$ | -/68 | dB | For water- or brine-to-water heat pumps: Rated brine or water flow rate, outdoor heat exchanger | - | N/A | $m^3/h$ |
| Annual energy consumption | $Q_{HE}$ | 7571 | kWh | | | | |
| For heat pump combination heater: | | | | | | | |
| **Declared load profile** | N/A | | | **Water heating energy efficiency** | $\eta_{wh}$ | N/A | % |
| Daily electricity consumption | $Q_{elec}$ | N/A | kWh | Daily fuel consumption | $Q_{fuel}$ | N/A | kWh |
| Annual electricity consumption | AEC | N/A | kWh | Annual fuel consumption | AFC | N/A | GJ |
| Contact details | See the back cover of the manual | | | | | | |

(*) For heat pump space heaters and heat pump combination heaters, the rated heat output Prated is equal to the design load for heating Pdesignh, and the rated heat output of a supplementary heater Psup is equal to the supplementary capacity for heating sup(Tj).
(**) If Cdh is not determined by measurement then the default degradation coefficient is Cdh = 0.9.

## Technical parameters

| | |
|---|---|
| Model(s): | 3-PH 16kW(heating 9kW);3-PH 16kW(heating 6kW); 3-PH 16kW(heating 3kW);3-PH 16kW |
| Air-to-water heat pump: | yes |
| Water-to-water heat pump: | no |
| Brine-to-water heat pump: | no |
| Low-temperature heat pump: | no |
| Equipped with a supplementary heater: | yes(for 3-PH 16kW(heating 9kW);3-PH 16kW(heating 6kW);3-PH 16kW(heating 3kW)) no(for 3-PH 16kW) |
| Heat pump combination heater: | no |
| Declared climate condition: | warmer |

Parameters are declared for medium-temperature application.

| Item | Symbol | Value | Unit | Item | Symbol | Value | Unit |
|---|---|---|---|---|---|---|---|
| **Rated heat output (*)** | $P_{rated}$ | 14 | kW | **Seasonal space heating energy efficiency** | $\eta_s$ | 171 | % |
| Declared capacity for heating for part load at indoor temperature 20 °C and outdoor temperature $T_j$ | | | | Declared capacity for heating for part load at indoor temperature 20 °C and outdoor temperature $T_j$ | | | |
| $T_j$ = – 7°C | $P_{dh}$ | N/A | kW | $T_j$ = – 7°C | $COP_d$ | N/A | - |
| $T_j$ = + 2°C | $P_{dh}$ | 13.2 | kW | $T_j$ = + 2°C | $COP_d$ | 2.32 | - |
| $T_j$ = + 7°C | $P_{dh}$ | 9.1 | kW | $T_j$ = + 7°C | $COP_d$ | 3.70 | - |
| $T_j$ = + 12°C | $P_{dh}$ | 4.1 | kW | $T_j$ = + 12°C | $COP_d$ | 5.80 | - |
| $T_j$ = bivalent temperature | $P_{dh}$ | 9.1 | kW | $T_j$ = bivalent temperature | $COP_d$ | 3.70 | - |
| $T_j$ = operation limit temperature | $P_{dh}$ | 13.2 | kW | $T_j$ = operation limit temperature | $COP_d$ | 2.32 | - |
| For air-to-water heat pumps: $T_j$ = – 15°C (if TOL < – 20°C) | $P_{dh}$ | N/A | kW | For air-to-water heat pumps: $T_j$ = – 15°C (if TOL < – 20°C) | $COP_d$ | N/A | - |
| Bivalent temperature | $T_{biv}$ | 7 | °C | For air-to-water heat pumps: Operation limit temperature | TOL | 2 | °C |
| Cycling interval capacity for heating | $P_{cych}$ | N/A | kW | Cycling interval efficiency | $COP_{cyc}$ | N/A | - |
| Degradation co-efficient (**) | $C_{dh}$ | 0.9 | - | Heating water operating limit temperature | WTOL | 65 | °C |
| Power consumption in modes other than active mode | | | | Supplementary heater | | | |
| Off mode | $P_{OFF}$ | 0.014 | kW | Rated heat output (**) | $P_{sup}$ | 0.8 | kW |
| Thermostat-off mode | $P_{TO}$ | 0.024 | kW | Type of energy input | Electric | | |
| Standby mode | $P_{SB}$ | 0.014 | kW | | | | |
| Crankcase heater mode | $P_{CK}$ | 0.000 | kW | | | | |

| **Other items** | | | | | | | |
|---|---|---|---|---|---|---|---|
| Capacity control | variable | | | For air-to-water heat pumps: Rated air flow rate, outdoors | - | 6000 | $m^3/h$ |
| Sound power level, indoors/ outdoors | $L_{WA}$ | -/68 | dB | For water- or brine-to-water heat pumps: Rated brine or water flow rate, outdoor heat exchanger | - | N/A | $m^3/h$ |
| Annual energy consumption | $Q_{HE}$ | 4321 | kWh | | | | |
| For heat pump combination heater: | | | | | | | |
| **Declared load profile** | N/A | | | **Water heating energy efficiency** | $\eta_{wh}$ | N/A | % |
| Daily electricity consumption | $Q_{elec}$ | N/A | kWh | Daily fuel consumption | $Q_{fuel}$ | N/A | kWh |
| Annual electricity consumption | AEC | N/A | kWh | Annual fuel consumption | AFC | N/A | GJ |
| Contact details | See the back cover of the manual | | | | | | |

(*) For heat pump space heaters and heat pump combination heaters, the rated heat output Prated is equal to the design load for heating Pdesignh, and the rated heat output of a supplementary heater Psup is equal to the supplementary capacity for heating sup(Tj).
(**) If Cdh is not determined by measurement then the default degradation coefficient is Cdh = 0.9.

## Technical parameters

| | |
|---|---|
| Model(s): | 3-PH 16kW(heating 9kW);3-PH 16kW(heating 6kW); 3-PH 16kW(heating 3kW);3-PH 16kW |
| Air-to-water heat pump: | yes |
| Water-to-water heat pump: | no |
| Brine-to-water heat pump: | no |
| Low-temperature heat pump: | no |
| Equipped with a supplementary heater: | yes(for 3-PH 16kW(heating 9kW);3-PH 16kW(heating 6kW);3-PH 16kW(heating 3kW)) no(for 3-PH 16kW) |
| Heat pump combination heater: | no |
| Declared climate condition: | colder |

Parameters are declared for medium-temperature application.

| Item | Symbol | Value | Unit | Item | Symbol | Value | Unit |
|---|---|---|---|---|---|---|---|
| **Rated heat output (*)** | $P_{rated}$ | 12 | kW | **Seasonal space heating energy efficiency** | $\eta_s$ | 121 | % |
| Declared capacity for heating for part load at indoor temperature 20 °C and outdoor temperature $T_j$ | | | | Declared capacity for heating for part load at indoor temperature 20 °C and outdoor temperature $T_j$ | | | |
| $T_j$ = – 7°C | $P_{dh}$ | 7.8 | kW | $T_j$ = – 7°C | $COP_d$ | 2.64 | - |
| $T_j$ = + 2°C | $P_{dh}$ | 4.5 | kW | $T_j$ = + 2°C | $COP_d$ | 3.78 | - |
| $T_j$ = + 7°C | $P_{dh}$ | 3.2 | kW | $T_j$ = + 7°C | $COP_d$ | 4.87 | - |
| $T_j$ = + 12°C | $P_{dh}$ | 3.7 | kW | $T_j$ = + 12°C | $COP_d$ | 6.40 | - |
| $T_j$ = bivalent temperature | $P_{dh}$ | 9.6 | kW | $T_j$ = bivalent temperature | $COP_d$ | 1.85 | - |
| $T_j$ = operation limit temperature | $P_{dh}$ | 5.1 | kW | $T_j$ = operation limit temperature | $COP_d$ | 1.04 | - |
| For air-to-water heat pumps: $T_j$ = – 15°C (if TOL < – 20°C) | $P_{dh}$ | N/A | kW | For air-to-water heat pumps: $T_j$ = – 15°C (if TOL < – 20°C) | $COP_d$ | N/A | - |
| Bivalent temperature | $T_{biv}$ | -15 | °C | For air-to-water heat pumps: Operation limit temperature | TOL | -22 | °C |
| Cycling interval capacity for heating | $P_{cych}$ | N/A | kW | Cycling interval efficiency | $COP_{cyc}$ | N/A | - |
| Degradation co-efficient (**) | $C_{dh}$ | 0.9 | - | Heating water operating limit temperature | WTOL | 65 | °C |
| Power consumption in modes other than active mode | | | | Supplementary heater | | | |
| Off mode | $P_{OFF}$ | 0.014 | kW | Rated heat output (**) | $P_{sup}$ | 6.9 | kW |
| Thermostat-off mode | $P_{TO}$ | 0.024 | kW | Type of energy input | Electric | | |
| Standby mode | $P_{SB}$ | 0.014 | kW | | | | |
| Crankcase heater mode | $P_{CK}$ | 0.000 | kW | | | | |

| **Other items** | | | | | | | |
|---|---|---|---|---|---|---|---|
| Capacity control | variable | | | For air-to-water heat pumps: Rated air flow rate, outdoors | - | 6000 | $m^3/h$ |
| Sound power level, indoors/ outdoors | $L_{WA}$ | -/68 | dB | For water- or brine-to-water heat pumps: Rated brine or water flow rate, outdoor heat exchanger | - | N/A | $m^3/h$ |
| Annual energy consumption | $Q_{HE}$ | 9356 | kWh | | | | |
| For heat pump combination heater: | | | | | | | |
| **Declared load profile** | N/A | | | **Water heating energy efficiency** | $\eta_{wh}$ | N/A | % |
| Daily electricity consumption | $Q_{elec}$ | N/A | kWh | Daily fuel consumption | $Q_{fuel}$ | N/A | kWh |
| Annual electricity consumption | AEC | N/A | kWh | Annual fuel consumption | AFC | N/A | GJ |
| Contact details | See the back cover of the manual | | | | | | |

(*) For heat pump space heaters and heat pump combination heaters, the rated heat output Prated is equal to the design load for heating Pdesignh, and the rated heat output of a supplementary heater Psup is equal to the supplementary capacity for heating sup(Tj).
(**) If Cdh is not determined by measurement then the default degradation coefficient is Cdh = 0.9.

# Information requirements for comfort chillers

| | |
|---|---|
| Model(s): | 4kW(heating 3kW);4kW |
| Outdoor side heat exchanger of chiller | Air to water |
| indoor side heat exchanger chiller | Water |
| Type: | compressor driven vapour compression |
| Driver af compressor | Electric motor |

| Item | Symbol | Value | Unit | | Item | Symbol | Value | Unit |
|---|---|---|---|---|---|---|---|---|
| **Rated cooling capacity** | Prated,c | 4.6 | kW | | **Seasonal space cooling energy efficiency** | $\eta_{s,c}$ | 216 | % |
| Declared capacity for cooling for part load at given outdoor temperature Tj | | | | | Declared energy efficiency ratio for cooling for part load at given outdoor temperature Tj | | | |
| Tj = + 35°C | $P_{dc}$ | 4.6 | kW | | Tj = +35°C | EERd | 3.38 | - |
| Tj = + 30°C | $P_{dc}$ | 3.5 | kW | | Tj = + 30°C | EERd | 4.60 | - |
| Tj = + 25°C | $P_{dc}$ | 2.2 | kW | | Tj = + 25°C | EERd | 6.23 | - |
| Tj = + 20°C | $P_{dc}$ | 1.0 | kW | | Tj = + 20°C | EERd | 7.69 | - |
| | | | | | | | | |
| Degradation co-efficient of chiller (*) | $C_{dc}$ | 0.9 | - | | | | | |
| Power consumption in modes other than "active mode" | | | | | | | | |
| Off mode | $P_{OFF}$ | 0.010 | kW | | Crankcase heater mode | $P_{CK}$ | 0.000 | kW |
| Thermostat-off mode | $P_{TO}$ | 0.010 | kW | | Standby mode | $P_{SB}$ | 0.010 | kW |
| **Other items** | | | | | | | | |
| Capacity control | variable | | | | For air-to-water comfort chillers: air flow rate, outdoor measured | - | 2600 | $m^3/h$ |
| Sound power level, indoors/ outdoors | LWA | -/56 | dB | | For water/brine-to-water chillers: Rated brine or water flow rate, outdoor side heat exchanger | - | N/A | $m^3/h$ |
| Emissions of nitrogen oxide (if applicable) | $NO_x$(**) | - | mg/kWh input GCV | | | | | |
| GWP of the refrigerant | - | 675 | kg $CO_{2\,eq}$ (100 years) | | | | | |
| Standard rating conditions used | Low temperature application | | | | | | | |
| Contact details | See the back cover of the manual | | | | | | | |

(*)If $C_{dc}$ is not determined by measurement then the default degradation coefficient of chillers shall be 0.9.
(**)From 26 September 2018.

# Information requirements for comfort chillers

| | |
|---|---|
| Model(s): | 4kW(heating 3kW);4kW |
| Outdoor side heat exchanger of chiller | Air to water |
| indoor side heat exchanger chiller | Water |
| Type: | compressor driven vapour compression |
| Driver af compressor | Electric motor |

| Item | Symbol | Value | Unit | Item | Symbol | Value | Unit |
|---|---|---|---|---|---|---|---|
| **Rated cooling capacity** | Prated,c | 4.5 | kW | **Seasonal space cooling energy efficiency** | $\eta_{s,c}$ | 305 | % |
| Declared capacity for cooling for part load at given outdoor temperature Tj | | | | Declared energy efficiency ratio for cooling for part load at given outdoor temperature Tj | | | |
| Tj = + 35°C | $P_{dc}$ | 4.5 | kW | Tj = +35°C | EERd | 5.64 | - |
| Tj = + 30°C | $P_{dc}$ | 3.4 | kW | Tj = + 30°C | EERd | 7.47 | - |
| Tj = + 25°C | $P_{dc}$ | 2.3 | kW | Tj = + 25°C | EERd | 8.97 | - |
| Tj = + 20°C | $P_{dc}$ | 1.0 | kW | Tj = + 20°C | EERd | 8.81 | - |
| | | | | | | | |
| Degradation co-efficient of chiller (*) | $C_{dc}$ | 0.9 | - | | | | |
| Power consumption in modes other than "active mode" | | | | | | | |
| Off mode | $P_{OFF}$ | 0.010 | kW | Crankcase heater mode | $P_{CK}$ | 0.000 | kW |
| Thermostat-off mode | $P_{TO}$ | 0.010 | kW | Standby mode | $P_{SB}$ | 0.010 | kW |
| **Other items** | | | | | | | |
| Capacity control | variable | | | For air-to-water comfort chillers: air flow rate, outdoor measured | - | 2600 | $m^3/h$ |
| Sound power level, indoors/ outdoors | LWA | -/56 | dB | For water/brine-to-water chillers: Rated brine or water flow rate, outdoor side heat exchanger | - | N/A | $m^3/h$ |
| Emissions of nitrogen oxide (if applicable) | $NO_x$(**) | - | mg/kWh input GCV | | | | |
| GWP of the refrigerant | - | 675 | kg $CO_{2\,eq}$ (100 years) | | | | |
| Standard rating conditions used | Medium temperature application | | | | | | |
| Contact details | See the back cover of the manual | | | | | | |

(*)If $C_{dc}$ is not determined by measurement then the default degradation coefficient of chillers shall be 0.9.
(**)From 26 September 2018.

# Information requirements for comfort chillers

| | |
|---|---|
| Model(s): | 6kW(heating 3kW);6kW |
| Outdoor side heat exchanger of chiller | Air to water |
| indoor side heat exchanger chiller | Water |
| Type: | compressor driven vapour compression |
| Driver af compressor | Electric motor |

| Item | Symbol | Value | Unit | | Item | Symbol | Value | Unit |
|---|---|---|---|---|---|---|---|---|
| **Rated cooling capacity** | Prated,c | 6.1 | kW | | **Seasonal space cooling energy efficiency** | $\eta_{s,c}$ | 207 | % |
| Declared capacity for cooling for part load at given outdoor temperature Tj | | | | | Declared energy efficiency ratio for cooling for part load at given outdoor temperature Tj | | | |
| Tj = + 35°C | $P_{dc}$ | 6.1 | kW | | Tj = +35°C | EERd | 3.22 | - |
| Tj = + 30°C | $P_{dc}$ | 4.7 | kW | | Tj = + 30°C | EERd | 4.68 | - |
| Tj = + 25°C | $P_{dc}$ | 2.8 | kW | | Tj = + 25°C | EERd | 6.25 | - |
| Tj = + 20°C | $P_{dc}$ | 1.2 | kW | | Tj = + 20°C | EERd | 6.07 | - |
| | | | | | | | | |
| Degradation co-efficient of chiller (*) | $C_{dc}$ | 0.9 | - | | | | | |
| Power consumption in modes other than "active mode" | | | | | | | | |
| Off mode | $P_{OFF}$ | 0.010 | kW | | Crankcase heater mode | $P_{CK}$ | 0.000 | kW |
| Thermostat-off mode | $P_{TO}$ | 0.010 | kW | | Standby mode | $P_{SB}$ | 0.010 | kW |
| **Other items** | | | | | | | | |
| Capacity control | variable | | | | For air-to-water comfort chillers: air flow rate, outdoor measured | - | 2800 | $m^3/h$ |
| Sound power level, indoors/ outdoors | LWA | -/59 | dB | | For water/brine-to-water chillers: Rated brine or water flow rate, outdoor side heat exchanger | - | N/A | $m^3/h$ |
| Emissions of nitrogen oxide (if applicable) | $NO_x$(**) | - | mg/kWh input GCV | | | | | |
| GWP of the refrigerant | - | 675 | kg $CO_{2\,eq}$ (100 years) | | | | | |
| Standard rating conditions used | Low temperature application | | | | | | | |
| Contact details | See the back cover of the manual | | | | | | | |

(*)If $C_{dc}$ is not determined by measurement then the default degradation coefficient of chillers shall be 0.9.
(**)From 26 September 2018.

# Information requirements for comfort chillers

| | |
|---|---|
| Model(s): | 6kW(heating 3kW);6kW |
| Outdoor side heat exchanger of chiller | Air to water |
| indoor side heat exchanger chiller | Water |
| Type: | compressor driven vapour compression |
| Driver af compressor | Electric motor |

| Item | Symbol | Value | Unit | Item | Symbol | Value | Unit |
|---|---|---|---|---|---|---|---|
| **Rated cooling capacity** | Prated,c | 6.1 | kW | **Seasonal space cooling energy efficiency** | $\eta_{s,c}$ | 319 | % |
| Declared capacity for cooling for part load at given outdoor temperature Tj | | | | Declared energy efficiency ratio for cooling for part load at given outdoor temperature Tj | | | |
| Tj = + 35°C | $P_{dc}$ | 6.1 | kW | Tj = +35°C | EERd | 5.19 | - |
| Tj = + 30°C | $P_{dc}$ | 4.4 | kW | Tj = + 30°C | EERd | 7.22 | - |
| Tj = + 25°C | $P_{dc}$ | 2.9 | kW | Tj = + 25°C | EERd | 10.09 | - |
| Tj = + 20°C | $P_{dc}$ | 1.3 | kW | Tj = + 20°C | EERd | 8.82 | - |
| | | | | | | | |
| Degradation co-efficient of chiller (*) | $C_{dc}$ | 0.9 | - | | | | |
| Power consumption in modes other than "active mode" | | | | | | | |
| Off mode | $P_{OFF}$ | 0.010 | kW | Crankcase heater mode | $P_{CK}$ | 0.000 | kW |
| Thermostat-off mode | $P_{TO}$ | 0.010 | kW | Standby mode | $P_{SB}$ | 0.010 | kW |
| **Other items** | | | | | | | |
| Capacity control | variable | | | For air-to-water comfort chillers: air flow rate, outdoor measured | - | 2800 | $m^3/h$ |
| Sound power level, indoors/ outdoors | LWA | -/59 | dB | For water/brine-to-water chillers: Rated brine or water flow rate, outdoor side heat exchanger | - | N/A | $m^3/h$ |
| Emissions of nitrogen oxide (if applicable) | $NO_x$(**) | - | mg/kWh input GCV | | | | |
| GWP of the refrigerant | - | 675 | kg $CO_{2\,eq}$ (100 years) | | | | |
| Standard rating conditions used | Medium temperature application | | | | | | |
| Contact details | See the back cover of the manual | | | | | | |

(*)If $C_{dc}$ is not determined by measurement then the default degradation coefficient of chillers shall be 0.9.
(**)From 26 September 2018.

# Information requirements for comfort chillers

| | |
|---|---|
| Model(s): | 8kW(heating 3kW);8kW |
| Outdoor side heat exchanger of chiller: | Air to water |
| indoor side heat exchanger chiller: | Water |
| Type: | compressor driven vapour compression |
| Driver af compressor: | Electric motor |

| Item | Symbol | Value | Unit | | Item | Symbol | Value | Unit |
|---|---|---|---|---|---|---|---|---|
| **Rated cooling capacity** | $P_{rated,c}$ | 7 | kW | | **Seasonal space cooling energy efficiency** | $\eta_{s,c}$ | 214 | % |
| Declared capacity for cooling for part load at given outdoor temperature Tj | | | | | Declared energy efficiency ratio for cooling for part load at given outdoor temperature Tj | | | |
| Tj = + 35°C | $P_{dc}$ | 7.0 | kW | | Tj = +35°C | $EER_d$ | 3.38 | - |
| Tj = + 30°C | $P_{dc}$ | 5.7 | kW | | Tj = + 30°C | $EER_d$ | 4.60 | - |
| Tj = + 25°C | $P_{dc}$ | 3.7 | kW | | Tj = + 25°C | $EER_d$ | 6.23 | - |
| Tj = + 20°C | $P_{dc}$ | 1.7 | kW | | Tj = + 20°C | $EER_d$ | 7.69 | - |
| | | | | | | | | |
| Degradation co-efficient of chiller (*) | $C_{dc}$ | 0.9 | - | | | | | |
| Power consumption in modes other than "active mode" | | | | | | | | |
| Off mode | $P_{OFF}$ | 0.014 | kW | | Crankcase heater mode | $P_{CK}$ | 0.000 | kW |
| Thermostat-off mode | $P_{TO}$ | 0.024 | kW | | Standby mode | $P_{SB}$ | 0.014 | kW |
| **Other items** | | | | | | | | |
| Capacity control | variable | | | | For air-to-water comfort chillers: air flow rate, outdoor measured | - | 4000 | $m^3/h$ |
| Sound power level, indoors/ outdoors | LWA | -/60 | dB | | For water/brine-to-water chillers: Rated brine or water flow rate, outdoor side heat exchanger | - | N/A | $m^3/h$ |
| Emissions of nitrogen oxide (if applicable) | $NO_x$(**) | - | mg/kWh input GCV | | | | | |
| GWP of the refrigerant | - | 675 | kg $CO_{2\ eq}$ (100 years) | | | | | |
| Standard rating conditions used | Low temperature application | | | | | | | |
| Contact details | See the back cover of the manual | | | | | | | |

(*)If $C_{dc}$ is not determined by measurement then the default degradation coefficient of chillers shall be 0.9.
(**)From 26 September 2018.

# Information requirements for comfort chillers

| | |
|---|---|
| Model(s): | 8kW(heating 3kW);8kW |
| Outdoor side heat exchanger of chiller: | Air to water |
| indoor side heat exchanger chiller: | Water |
| Type: | compressor driven vapour compression |
| Driver af compressor: | Electric motor |

| Item | Symbol | Value | Unit | | Item | Symbol | Value | Unit |
|---|---|---|---|---|---|---|---|---|
| **Rated cooling capacity** | $P_{rated,c}$ | 8 | kW | | **Seasonal space cooling energy efficiency** | $\eta_{s,c}$ | 318 | % |
| Declared capacity for cooling for part load at given outdoor temperature Tj | | | | | Declared energy efficiency ratio for cooling for part load at given outdoor temperature Tj | | | |
| Tj = + 35°C | $P_{dc}$ | 8.0 | kW | | Tj = +35°C | $EER_d$ | 4.95 | - |
| Tj = + 30°C | $P_{dc}$ | 6.4 | kW | | Tj = + 30°C | $EER_d$ | 6.61 | - |
| Tj = + 25°C | $P_{dc}$ | 4.3 | kW | | Tj = + 25°C | $EER_d$ | 9.06 | - |
| Tj = + 20°C | $P_{dc}$ | 1.8 | kW | | Tj = + 20°C | $EER_d$ | 13.14 | - |
| | | | | | | | | |
| Degradation co-efficient of chiller (*) | $C_{dc}$ | 0.9 | - | | | | | |
| Power consumption in modes other than "active mode" | | | | | | | | |
| Off mode | $P_{OFF}$ | 0.014 | kW | | Crankcase heater mode | $P_{CK}$ | 0.000 | kW |
| Thermostat-off mode | $P_{TO}$ | 0.024 | kW | | Standby mode | $P_{SB}$ | 0.014 | kW |
| **Other items** | | | | | | | | |
| Capacity control | variable | | | | For air-to-water comfort chillers: air flow rate, outdoor measured | - | 4000 | $m^3/h$ |
| Sound power level, indoors/ outdoors | LWA | -/60 | dB | | For water/brine-to-water chillers: Rated brine or water flow rate, outdoor side heat exchanger | - | N/A | $m^3/h$ |
| Emissions of nitrogen oxide (if applicable) | $NO_x$(**) | - | mg/kWh input GCV | | | | | |
| GWP of the refrigerant | - | 675 | kg $CO_{2\ eq}$ (100 years) | | | | | |
| Standard rating conditions used | Medium temperature application | | | | | | | |
| Contact details | See the back cover of the manual | | | | | | | |

(*)If $C_{dc}$ is not determined by measurement then the default degradation coefficient of chillers shall be 0.9.
(**)From 26 September 2018.

# Information requirements for comfort chillers

| | |
|---|---|
| Model(s): | 10kW(heating 3kW);10kW |
| Outdoor side heat exchanger of chiller: | Air to water |
| indoor side heat exchanger chiller: | Water |
| Type: | compressor driven vapour compression |
| Driver af compressor: | Electric motor |

| Item | Symbol | Value | Unit | Item | Symbol | Value | Unit |
|---|---|---|---|---|---|---|---|
| **Rated cooling capacity** | $P_{rated,c}$ | 8 | kW | **Seasonal space cooling energy efficiency** | $\eta_{s,c}$ | 212 | % |
| Declared capacity for cooling for part load at given outdoor temperature Tj | | | | Declared energy efficiency ratio for cooling for part load at given outdoor temperature Tj | | | |
| Tj = + 35°C | $P_{dc}$ | 8.1 | kW | Tj = +35°C | $EER_d$ | 3.16 | - |
| Tj = + 30°C | $P_{dc}$ | 6.6 | kW | Tj = + 30°C | $EER_d$ | 4.38 | - |
| Tj = + 25°C | $P_{dc}$ | 4.3 | kW | Tj = + 25°C | $EER_d$ | 6.18 | - |
| Tj = + 20°C | $P_{dc}$ | 1.9 | kW | Tj = + 20°C | $EER_d$ | 8.17 | - |
| | | | | | | | |
| Degradation co-efficient of chiller (*) | $C_{dc}$ | 0.9 | - | | | | |
| Power consumption in modes other than "active mode" | | | | | | | |
| Off mode | $P_{OFF}$ | 0.014 | kW | Crankcase heater mode | $P_{CK}$ | 0.000 | kW |
| Thermostat-off mode | $P_{TO}$ | 0.024 | kW | Standby mode | $P_{SB}$ | 0.014 | kW |
| **Other items** | | | | | | | |
| Capacity control | variable | | | For air-to-water comfort chillers: air flow rate, outdoor measured | - | 4500 | $m^3/h$ |
| Sound power level, indoors/ outdoors | LWA | -/61 | dB | For water/brine-to-water chillers: Rated brine or water flow rate, outdoor side heat exchanger | - | N/A | $m^3/h$ |
| Emissions of nitrogen oxide (if applicable) | $NO_x$(**) | - | mg/kWh input GCV | | | | |
| GWP of the refrigerant | - | 675 | kg $CO_{2\ eq}$ (100 years) | | | | |
| Standard rating conditions used | Low temperature application | | | | | | |
| Contact details | See the back cover of the manual | | | | | | |

(*)If $C_{dc}$ is not determined by measurement then the default degradation coefficient of chillers shall be 0.9.
(**)From 26 September 2018.

# Information requirements for comfort chillers

| | |
|---|---|
| Model(s): | 10kW(heating 3kW);10kW |
| Outdoor side heat exchanger of chiller: | Air to water |
| indoor side heat exchanger chiller: | Water |
| Type: | compressor driven vapour compression |
| Driver af compressor: | Electric motor |

| Item | Symbol | Value | Unit | Item | Symbol | Value | Unit |
|---|---|---|---|---|---|---|---|
| **Rated cooling capacity** | $P_{rated,c}$ | 10 | kW | **Seasonal space cooling energy efficiency** | $\eta_{s,c}$ | 307 | % |
| Declared capacity for cooling for part load at given outdoor temperature Tj | | | | Declared energy efficiency ratio for cooling for part load at given outdoor temperature Tj | | | |
| Tj = + 35°C | $P_{dc}$ | 9.5 | kW | Tj = +35°C | $EER_d$ | 4.56 | - |
| Tj = + 30°C | $P_{dc}$ | 7.7 | kW | Tj = + 30°C | $EER_d$ | 6.33 | - |
| Tj = + 25°C | $P_{dc}$ | 4.9 | kW | Tj = + 25°C | $EER_d$ | 8.48 | - |
| Tj = + 20°C | $P_{dc}$ | 2.3 | kW | Tj = + 20°C | $EER_d$ | 13.19 | - |
| | | | | | | | |
| Degradation co-efficient of chiller (*) | $C_{dc}$ | 0.9 | - | | | | |
| Power consumption in modes other than "active mode" | | | | | | | |
| Off mode | $P_{OFF}$ | 0.014 | kW | Crankcase heater mode | $P_{CK}$ | 0.000 | kW |
| Thermostat-off mode | $P_{TO}$ | 0.024 | kW | Standby mode | $P_{SB}$ | 0.014 | kW |
| **Other items** | | | | | | | |
| Capacity control | variable | | | For air-to-water comfort chillers: air flow rate, outdoor measured | - | 4500 | $m^3/h$ |
| Sound power level, indoors/ outdoors | LWA | -/61 | dB | For water/brine-to-water chillers: Rated brine or water flow rate, outdoor side heat exchanger | - | N/A | $m^3/h$ |
| Emissions of nitrogen oxide (if applicable) | $NO_x$(**) | - | mg/kWh input GCV | | | | |
| GWP of the refrigerant | - | 675 | kg $CO_{2\ eq}$ (100 years) | | | | |
| Standard rating conditions used | Medium temperature application | | | | | | |
| Contact details | See the back cover of the manual | | | | | | |

(*)If $C_{dc}$ is not determined by measurement then the default degradation coefficient of chillers shall be 0.9.
(**)From 26 September 2018.

# Information requirements for comfort chillers

| | |
|---|---|
| Model(s): | 12kW(heating 3kW);12kW |
| Outdoor side heat exchanger of chiller: | Air to water |
| indoor side heat exchanger chiller: | Water |
| Type: | compressor driven vapour compression |
| Driver af compressor: | Electric motor |

| Item | Symbol | Value | Unit | Item | Symbol | Value | Unit |
|---|---|---|---|---|---|---|---|
| **Rated cooling capacity** | $P_{rated,c}$ | 12 | kW | **Seasonal space cooling energy efficiency** | $\eta_{s,c}$ | 201 | % |
| Declared capacity for cooling for part load at given outdoor temperature Tj | | | | Declared energy efficiency ratio for cooling for part load at given outdoor temperature Tj | | | |
| Tj = + 35°C | $P_{dc}$ | 11.6 | kW | Tj = +35°C | $EER_d$ | 2.80 | - |
| Tj = + 30°C | $P_{dc}$ | 8.7 | kW | Tj = + 30°C | $EER_d$ | 4.34 | - |
| Tj = + 25°C | $P_{dc}$ | 5.8 | kW | Tj = + 25°C | $EER_d$ | 6.02 | - |
| Tj = + 20°C | $P_{dc}$ | 2.6 | kW | Tj = + 20°C | $EER_d$ | 6.46 | - |
| | | | | | | | |
| Degradation co-efficient of chiller (*) | $C_{dc}$ | 0.9 | - | | | | |
| Power consumption in modes other than "active mode" | | | | | | | |
| Off mode | $P_{OFF}$ | 0.020 | kW | Crankcase heater mode | $P_{CK}$ | 0.000 | kW |
| Thermostat-off mode | $P_{TO}$ | 0.010 | kW | Standby mode | $P_{SB}$ | 0.020 | kW |
| **Other items** | | | | | | | |
| Capacity control | variable | | | For air-to-water comfort chillers: air flow rate, outdoor measured | - | 5000 | $m^3/h$ |
| Sound power level, indoors/ outdoors | LWA | -/64 | dB | For water/brine-to-water chillers: Rated brine or water flow rate, outdoor side heat exchanger | - | N/A | $m^3/h$ |
| Emissions of nitrogen oxide (if applicable) | $NO_x$(**) | - | mg/kWh input GCV | | | | |
| GWP of the refrigerant | - | 675 | kg $CO_{2\ eq}$ (100 years) | | | | |
| Standard rating conditions used | Low temperature application | | | | | | |
| Contact details | See the back cover of the manual | | | | | | |

(*)If $C_{dc}$ is not determined by measurement then the default degradation coefficient of chillers shall be 0.9.
(**)From 26 September 2018.

# Information requirements for comfort chillers

| | |
|---|---|
| Model(s): | 12kW(heating 3kW);12kW |
| Outdoor side heat exchanger of chiller: | Air to water |
| indoor side heat exchanger chiller: | Water |
| Type: | compressor driven vapour compression |
| Driver af compressor: | Electric motor |

| Item | Symbol | Value | Unit | | Item | Symbol | Value | Unit |
|---|---|---|---|---|---|---|---|---|
| **Rated cooling capacity** | $P_{rated,c}$ | 12 | kW | | **Seasonal space cooling energy efficiency** | $\eta_{s,c}$ | 295 | % |
| Declared capacity for cooling for part load at given outdoor temperature Tj | | | | | Declared energy efficiency ratio for cooling for part load at given outdoor temperature Tj | | | |
| Tj = + 35°C | $P_{dc}$ | 12.0 | kW | | Tj = +35°C | $EER_d$ | 3.96 | - |
| Tj = + 30°C | $P_{dc}$ | 9.3 | kW | | Tj = + 30°C | $EER_d$ | 6.16 | - |
| Tj = + 25°C | $P_{dc}$ | 5.6 | kW | | Tj = + 25°C | $EER_d$ | 9.03 | - |
| Tj = + 20°C | $P_{dc}$ | 3.5 | kW | | Tj = + 20°C | $EER_d$ | 10.04 | - |
| | | | | | | | | |
| Degradation co-efficient of chiller (*) | $C_{dc}$ | 0.9 | - | | | | | |
| Power consumption in modes other than "active mode" | | | | | | | | |
| Off mode | $P_{OFF}$ | 0.020 | kW | | Crankcase heater mode | $P_{CK}$ | 0.000 | kW |
| Thermostat-off mode | $P_{TO}$ | 0.010 | kW | | Standby mode | $P_{SB}$ | 0.020 | kW |
| **Other items** | | | | | | | | |
| Capacity control | variable | | | | For air-to-water comfort chillers: air flow rate, outdoor measured | - | 5000 | $m^3/h$ |
| Sound power level, indoors/ outdoors | LWA | -/64 | dB | | For water/brine-to-water chillers: Rated brine or water flow rate, outdoor side heat exchanger | - | N/A | $m^3/h$ |
| Emissions of nitrogen oxide (if applicable) | $NO_x$(**) | - | mg/kWh input GCV | | | | | |
| GWP of the refrigerant | - | 675 | kg $CO_{2\ eq}$ (100 years) | | | | | |
| Standard rating conditions used | Medium temperature application | | | | | | | |
| Contact details | See the back cover of the manual | | | | | | | |

(*)If $C_{dc}$ is not determined by measurement then the default degradation coefficient of chillers shall be 0.9.
(**)From 26 September 2018.

# Information requirements for comfort chillers

| | |
|---|---|
| Model(s): | 14kW(heating 3kW);14kW |
| Outdoor side heat exchanger of chiller: | Air to water |
| indoor side heat exchanger chiller: | Water |
| Type: | compressor driven vapour compression |
| Driver af compressor: | Electric motor |

| Item | Symbol | Value | Unit | Item | Symbol | Value | Unit |
|---|---|---|---|---|---|---|---|
| **Rated cooling capacity** | $P_{rated,c}$ | 13 | kW | **Seasonal space cooling energy efficiency** | $\eta_{s,c}$ | 200 | % |
| Declared capacity for cooling for part load at given outdoor temperature Tj | | | | Declared energy efficiency ratio for cooling for part load at given outdoor temperature Tj | | | |
| Tj = + 35°C | $P_{dc}$ | 12.7 | kW | Tj = +35°C | $EER_d$ | 2.59 | - |
| Tj = + 30°C | $P_{dc}$ | 9.5 | kW | Tj = + 30°C | $EER_d$ | 4.33 | - |
| Tj = + 25°C | $P_{dc}$ | 6.3 | kW | Tj = + 25°C | $EER_d$ | 6.08 | - |
| Tj = + 20°C | $P_{dc}$ | 3.0 | kW | Tj = + 20°C | $EER_d$ | 6.64 | - |
| | | | | | | | |
| Degradation co-efficient of chiller (*) | $C_{dc}$ | 0.9 | - | | | | |
| Power consumption in modes other than "active mode" | | | | | | | |
| Off mode | $P_{OFF}$ | 0.020 | kW | Crankcase heater mode | $P_{CK}$ | 0.000 | kW |
| Thermostat-off mode | $P_{TO}$ | 0.010 | kW | Standby mode | $P_{SB}$ | 0.020 | kW |
| **Other items** | | | | | | | |
| Capacity control | variable | | | For air-to-water comfort chillers: air flow rate, outdoor measured | - | 5500 | $m^3/h$ |
| Sound power level, indoors/ outdoors | LWA | -/66 | dB | For water/brine-to-water chillers: Rated brine or water flow rate, outdoor side heat exchanger | - | N/A | $m^3/h$ |
| Emissions of nitrogen oxide (if applicable) | $NO_x$(**) | - | mg/kWh input GCV | | | | |
| GWP of the refrigerant | - | 675 | kg $CO_{2\ eq}$ (100 years) | | | | |
| Standard rating conditions used | Low temperature application | | | | | | |
| Contact details | See the back cover of the manual | | | | | | |

(*)If $C_{dc}$ is not determined by measurement then the default degradation coefficient of chillers shall be 0.9.
(**)From 26 September 2018.

# Information requirements for comfort chillers

| | |
|---|---|
| Model(s): | 14kW(heating 3kW);14kW |
| Outdoor side heat exchanger of chiller: | Air to water |
| indoor side heat exchanger chiller: | Water |
| Type: | compressor driven vapour compression |
| Driver af compressor: | Electric motor |

| Item | Symbol | Value | Unit | | Item | Symbol | Value | Unit |
|---|---|---|---|---|---|---|---|---|
| **Rated cooling capacity** | $P_{rated,c}$ | 14 | kW | | **Seasonal space cooling energy efficiency** | $\eta_{s,c}$ | 281 | % |
| Declared capacity for cooling for part load at given outdoor temperature Tj | | | | | Declared energy efficiency ratio for cooling for part load at given outdoor temperature Tj | | | |
| Tj = + 35°C | $P_{dc}$ | 13.6 | kW | | Tj = +35°C | $EER_d$ | 3.73 | - |
| Tj = + 30°C | $P_{dc}$ | 10.4 | kW | | Tj = + 30°C | $EER_d$ | 5.75 | - |
| Tj = + 25°C | $P_{dc}$ | 6.6 | kW | | Tj = + 25°C | $EER_d$ | 8.58 | - |
| Tj = + 20°C | $P_{dc}$ | 3.5 | kW | | Tj = + 20°C | $EER_d$ | 9.96 | - |
| | | | | | | | | |
| Degradation co-efficient of chiller (*) | $C_{dc}$ | 0.9 | - | | | | | |
| Power consumption in modes other than "active mode" | | | | | | | | |
| Off mode | $P_{OFF}$ | 0.020 | kW | | Crankcase heater mode | $P_{CK}$ | 0.000 | kW |
| Thermostat-off mode | $P_{TO}$ | 0.010 | kW | | Standby mode | $P_{SB}$ | 0.020 | kW |
| **Other items** | | | | | | | | |
| Capacity control | variable | | | | For air-to-water comfort chillers: air flow rate, outdoor measured | - | 5500 | $m^3/h$ |
| Sound power level, indoors/ outdoors | LWA | -/66 | dB | | For water/brine-to-water chillers: Rated brine or water flow rate, outdoor side heat exchanger | - | N/A | $m^3/h$ |
| Emissions of nitrogen oxide (if applicable) | $NO_x$(**) | - | mg/kWh input GCV | | | | | |
| GWP of the refrigerant | - | 675 | kg $CO_{2\ eq}$ (100 years) | | | | | |
| Standard rating conditions used | Medium temperature application | | | | | | | |
| Contact details | See the back cover of the manual | | | | | | | |

(*)If $C_{dc}$ is not determined by measurement then the default degradation coefficient of chillers shall be 0.9.
(**)From 26 September 2018.

# Information requirements for comfort chillers

| | |
|---|---|
| Model(s): | 16kW(heating 3kW);16kW |
| Outdoor side heat exchanger of chiller: | Air to water |
| indoor side heat exchanger chiller: | Water |
| Type: | compressor driven vapour compression |
| Driver af compressor: | Electric motor |

| Item | Symbol | Value | Unit | Item | Symbol | Value | Unit |
|---|---|---|---|---|---|---|---|
| **Rated cooling capacity** | $P_{rated,c}$ | 14 | kW | **Seasonal space cooling energy efficiency** | $\eta_{s,c}$ | 192 | % |
| Declared capacity for cooling for part load at given outdoor temperature Tj | | | | Declared energy efficiency ratio for cooling for part load at given outdoor temperature Tj | | | |
| Tj = + 35°C | $P_{dc}$ | 14.3 | kW | Tj = +35°C | $EER_d$ | 2.51 | - |
| Tj = + 30°C | $P_{dc}$ | 10.6 | kW | Tj = + 30°C | $EER_d$ | 3.70 | - |
| Tj = + 25°C | $P_{dc}$ | 6.8 | kW | Tj = + 25°C | $EER_d$ | 5.87 | - |
| Tj = + 20°C | $P_{dc}$ | 3.5 | kW | Tj = + 20°C | $EER_d$ | 7.23 | - |
| | | | | | | | |
| Degradation co-efficient of chiller (*) | $C_{dc}$ | 0.9 | - | | | | |
| Power consumption in modes other than "active mode" | | | | | | | |
| Off mode | $P_{OFF}$ | 0.020 | kW | Crankcase heater mode | $P_{CK}$ | 0.000 | kW |
| Thermostat-off mode | $P_{TO}$ | 0.010 | kW | Standby mode | $P_{SB}$ | 0.020 | kW |
| **Other items** | | | | | | | |
| Capacity control | variable | | | For air-to-water comfort chillers: air flow rate, outdoor measured | - | 6000 | $m^3/h$ |
| Sound power level, indoors/ outdoors | LWA | -/68 | dB | For water/brine-to-water chillers: Rated brine or water flow rate, outdoor side heat exchanger | - | N/A | $m^3/h$ |
| Emissions of nitrogen oxide (if applicable) | $NO_x$(**) | - | mg/kWh input GCV | | | | |
| GWP of the refrigerant | - | 675 | kg $CO_{2\ eq}$ (100 years) | | | | |
| Standard rating conditions used | Low temperature application | | | | | | |
| Contact details | See the back cover of the manual | | | | | | |

(*)If $C_{dc}$ is not determined by measurement then the default degradation coefficient of chillers shall be 0.9.
(**)From 26 September 2018.

# Information requirements for comfort chillers

| | |
|---|---|
| Model(s): | 16kW(heating 3kW);16kW |
| Outdoor side heat exchanger of chiller: | Air to water |
| indoor side heat exchanger chiller: | Water |
| Type: | compressor driven vapour compression |
| Driver af compressor: | Electric motor |

| Item | Symbol | Value | Unit | | Item | Symbol | Value | Unit |
|---|---|---|---|---|---|---|---|---|
| **Rated heat output (*)** | $P_{rated,c}$ | 15 | kW | | **Seasonal space cooling energy efficiency** | $\eta_{s,c}$ | 280 | % |
| Declared capacity for cooling for part load at given outdoor temperature Tj | | | | | Declared energy efficiency ratio for cooling for part load at given outdoor temperature Tj | | | |
| Tj = + 35°C | $P_{dc}$ | 15.4 | kW | | Tj = +35°C | $EER_d$ | 3.50 | - |
| Tj = + 30°C | $P_{dc}$ | 11.6 | kW | | Tj = + 30°C | $EER_d$ | 5.45 | - |
| Tj = + 25°C | $P_{dc}$ | 7.3 | kW | | Tj = + 25°C | $EER_d$ | 8.35 | - |
| Tj = + 20°C | $P_{dc}$ | 4.6 | kW | | Tj = + 20°C | $EER_d$ | 11.68 | - |
| | | | | | | | | |
| Degradation co-efficient of chiller (*) | $C_{dc}$ | 0.9 | - | | | | | |
| Power consumption in modes other than "active mode" | | | | | | | | |
| Off mode | $P_{OFF}$ | 0.020 | kW | | Crankcase heater mode | $P_{CK}$ | 0.000 | kW |
| Thermostat-off mode | $P_{TO}$ | 0.010 | kW | | Standby mode | $P_{SB}$ | 0.020 | kW |
| **Other items** | | | | | | | | |
| Capacity control | variable | | | | For air-to-water comfort chillers: air flow rate, outdoor measured | - | 6000 | $m^3/h$ |
| Sound power level, indoors/ outdoors | LWA | -/68 | dB | | For water/brine-to-water chillers: Rated brine or water flow rate, outdoor side heat exchanger | - | N/A | $m^3/h$ |
| Emissions of nitrogen oxide (if applicable) | $NO_x$(**) | - | mg/kWh input GCV | | | | | |
| GWP of the refrigerant | - | 675 | kg $CO_{2\ eq}$ (100 years) | | | | | |
| Standard rating conditions used | Medium temperature application | | | | | | | |
| Contact details | See the back cover of the manual | | | | | | | |

(*)If $C_{dc}$ is not determined by measurement then the default degradation coefficient of chillers shall be 0.9.
(**)From 26 September 2018.

# Information requirements for comfort chillers

| | |
|---|---|
| Model(s): | 3-PH 12kW(heating 9kW);3-PH 12kW(heating 6kW);<br>3-PH 12kW(heating 3kW);3-PH 12kW |
| Outdoor side heat exchanger of chiller | Air to water |
| indoor side heat exchanger chiller | Water |
| Type: | compressor driven vapour compression |
| Driver af compressor | Electric motor |

| Item | Symbol | Value | Unit | | Item | Symbol | Value | Unit |
|---|---|---|---|---|---|---|---|---|
| **Rated cooling capacity** | Prated,c | 12 | kW | | **Seasonal space cooling energy efficiency** | $\eta_{s,c}$ | 197 | % |
| Declared capacity for cooling for part load at given outdoor temperature Tj | | | | | Declared energy efficiency ratio for cooling for part load at given outdoor temperature Tj | | | |
| Tj = + 35°C | $P_{dc}$ | 11.7 | kW | | Tj = +35°C | EERd | 2.64 | - |
| Tj = + 30°C | $P_{dc}$ | 8.8 | kW | | Tj = + 30°C | EERd | 4.09 | - |
| Tj = + 25°C | $P_{dc}$ | 5.9 | kW | | Tj = + 25°C | EERd | 5.58 | - |
| Tj = + 20°C | $P_{dc}$ | 4.1 | kW | | Tj = + 20°C | EERd | 8.01 | - |
| | | | | | | | | |
| Degradation co-efficient of chiller (*) | $C_{dc}$ | 0.9 | - | | | | | |
| Power consumption in modes other than "active mode" | | | | | | | | |
| Off mode | $P_{OFF}$ | 0.014 | kW | | Crankcase heater mode | $P_{CK}$ | 0.000 | kW |
| Thermostat-off mode | $P_{TO}$ | 0.024 | kW | | Standby mode | $P_{SB}$ | 0.014 | kW |
| **Other items** | | | | | | | | |
| Capacity control | variable | | | | For air-to-water comfort chillers: air flow rate, outdoor measured | - | 5000 | $m^3/h$ |
| Sound power level, indoors/ outdoors | LWA | -/64 | dB | | For water/brine-to-water chillers: Rated brine or water flow rate, outdoor side heat exchanger | - | N/A | $m^3/h$ |
| Emissions of nitrogen oxide (if applicable) | $NO_x$(**) | - | mg/kWh input GCV | | | | | |
| GWP of the refrigerant | - | 675 | kg $CO_{2\ eq}$ (100 years) | | | | | |
| Standard rating conditions used | Low temperature application | | | | | | | |
| Contact details | See the back cover of the manual | | | | | | | |

(*)If $C_{dc}$ is not determined by measurement then the default degradation coefficient of chillers shall be 0.9.
(**)From 26 September 2018.

# Information requirements for comfort chillers

| | |
|---|---|
| Model(s): | 3-PH 12kW(heating 9kW);3-PH 12kW(heating 6kW);<br>3-PH 12kW(heating 3kW);3-PH 12kW |
| Outdoor side heat exchanger of chiller | Air to water |
| indoor side heat exchanger chiller | Water |
| Type: | compressor driven vapour compression |
| Driver af compressor | Electric motor |

| Item | Symbol | Value | Unit | | Item | Symbol | Value | Unit |
|---|---|---|---|---|---|---|---|---|
| **Rated cooling capacity** | Prated,c | 12 | kW | | **Seasonal space cooling energy efficiency** | $\eta_{s,c}$ | 276 | % |
| Declared capacity for cooling for part load at given outdoor temperature Tj | | | | | Declared energy efficiency ratio for cooling for part load at given outdoor temperature Tj | | | |
| Tj = + 35°C | $P_{dc}$ | 12.0 | kW | | Tj = +35°C | EERd | 3.91 | - |
| Tj = + 30°C | $P_{dc}$ | 9.3 | kW | | Tj = + 30°C | EERd | 5.67 | - |
| Tj = + 25°C | $P_{dc}$ | 5.7 | kW | | Tj = + 25°C | EERd | 7.98 | - |
| Tj = + 20°C | $P_{dc}$ | 5.1 | kW | | Tj = + 20°C | EERd | 11.37 | - |
| | | | | | | | | |
| Degradation co-efficient of chiller (*) | $C_{dc}$ | 0.9 | - | | | | | |
| Power consumption in modes other than "active mode" | | | | | | | | |
| Off mode | $P_{OFF}$ | 0.014 | kW | | Crankcase heater mode | $P_{CK}$ | 0.000 | kW |
| Thermostat-off mode | $P_{TO}$ | 0.024 | kW | | Standby mode | $P_{SB}$ | 0.014 | kW |
| **Other items** | | | | | | | | |
| Capacity control | variable | | | | For air-to-water comfort chillers: air flow rate, outdoor measured | - | 5000 | $m^3/h$ |
| Sound power level, indoors/ outdoors | LWA | -/64 | dB | | For water/brine-to-water chillers: Rated brine or water flow rate, outdoor side heat exchanger | - | N/A | $m^3/h$ |
| Emissions of nitrogen oxide (if applicable) | $NO_x$(**) | - | mg/kWh input GCV | | | | | |
| GWP of the refrigerant | - | 675 | kg $CO_{2\ eq}$ (100 years) | | | | | |
| Standard rating conditions used | Medium temperature application | | | | | | | |
| Contact details | See the back cover of the manual | | | | | | | |

(*)If $C_{dc}$ is not determined by measurement then the default degradation coefficient of chillers shall be 0.9.
(**)From 26 September 2018.

# Information requirements for comfort chillers

| | |
|---|---|
| Model(s): | 3-PH 14kW(heating 9kW);3-PH 14kW(heating 6kW);<br>3-PH 14kW(heating 3kW);3-PH 14kW |
| Outdoor side heat exchanger of chiller | Air to water |
| indoor side heat exchanger chiller | Water |
| Type: | compressor driven vapour compression |
| Driver af compressor | Electric motor |

| Item | Symbol | Value | Unit | | Item | Symbol | Value | Unit |
|---|---|---|---|---|---|---|---|---|
| **Rated cooling capacity** | Prated,c | 13 | kW | | **Seasonal space cooling energy efficiency** | $\eta_{s,c}$ | 188 | % |
| Declared capacity for cooling for part load at given outdoor temperature Tj | | | | | Declared energy efficiency ratio for cooling for part load at given outdoor temperature Tj | | | |
| Tj = + 35°C | $P_{dc}$ | 12.7 | kW | | Tj = +35°C | EERd | 2.36 | - |
| Tj = + 30°C | $P_{dc}$ | 9.5 | kW | | Tj = + 30°C | EERd | 4.07 | - |
| Tj = + 25°C | $P_{dc}$ | 6.1 | kW | | Tj = + 25°C | EERd | 5.76 | - |
| Tj = + 20°C | $P_{dc}$ | 2.8 | kW | | Tj = + 20°C | EERd | 6.05 | - |
| | | | | | | | | |
| Degradation co-efficient of chiller (*) | $C_{dc}$ | 0.9 | - | | | | | |
| Power consumption in modes other than "active mode" | | | | | | | | |
| Off mode | $P_{OFF}$ | 0.014 | kW | | Crankcase heater mode | $P_{CK}$ | 0.000 | kW |
| Thermostat-off mode | $P_{TO}$ | 0.024 | kW | | Standby mode | $P_{SB}$ | 0.014 | kW |
| **Other items** | | | | | | | | |
| Capacity control | variable | | | | For air-to-water comfort chillers: air flow rate, outdoor measured | - | 5500 | $m^3/h$ |
| Sound power level, indoors/ outdoors | LWA | -/66 | dB | | For water/brine-to-water chillers: Rated brine or water flow rate, outdoor side heat exchanger | - | N/A | $m^3/h$ |
| Emissions of nitrogen oxide (if applicable) | $NO_x$(**) | - | mg/kWh input GCV | | | | | |
| GWP of the refrigerant | - | 675 | kg $CO_{2\ eq}$ (100 years) | | | | | |

| | |
|---|---|
| Standard rating conditions used | Low temperature application |
| Contact details | See the back cover of the manual |

(*)If $C_{dc}$ is not determined by measurement then the default degradation coefficient of chillers shall be 0.9.
(**)From 26 September 2018.

# Information requirements for comfort chillers

| | |
|---|---|
| Model(s): | 3-PH 14kW(heating 9kW);3-PH 14kW(heating 6kW);<br>3-PH 14kW(heating 3kW);3-PH 14kW |
| Outdoor side heat exchanger of chiller | Air to water |
| indoor side heat exchanger chiller | Water |
| Type: | compressor driven vapour compression |
| Driver af compressor | Electric motor |

| Item | Symbol | Value | Unit | | Item | Symbol | Value | Unit |
|---|---|---|---|---|---|---|---|---|
| **Rated cooling capacity** | Prated,c | 14 | kW | | **Seasonal space cooling energy efficiency** | $\eta_{s,c}$ | 269 | % |
| Declared capacity for cooling for part load at given outdoor temperature Tj | | | | | Declared energy efficiency ratio for cooling for part load at given outdoor temperature Tj | | | |
| Tj = + 35°C | $P_{dc}$ | 13.5 | kW | | Tj = +35°C | EERd | 3.72 | - |
| Tj = + 30°C | $P_{dc}$ | 10.3 | kW | | Tj = + 30°C | EERd | 5.51 | - |
| Tj = + 25°C | $P_{dc}$ | 6.5 | kW | | Tj = + 25°C | EERd | 8.11 | - |
| Tj = + 20°C | $P_{dc}$ | 3.4 | kW | | Tj = + 20°C | EERd | 9.49 | - |
| | | | | | | | | |
| Degradation co-efficient of chiller (*) | $C_{dc}$ | 0.9 | - | | | | | |
| Power consumption in modes other than "active mode" | | | | | | | | |
| Off mode | $P_{OFF}$ | 0.014 | kW | | Crankcase heater mode | $P_{CK}$ | 0.000 | kW |
| Thermostat-off mode | $P_{TO}$ | 0.024 | kW | | Standby mode | $P_{SB}$ | 0.014 | kW |
| **Other items** | | | | | | | | |
| Capacity control | variable | | | | For air-to-water comfort chillers: air flow rate, outdoor measured | - | 5500 | $m^3/h$ |
| Sound power level, indoors/ outdoors | LWA | -/66 | dB | | For water/brine-to-water chillers: Rated brine or water flow rate, outdoor side heat exchanger | - | N/A | $m^3/h$ |
| Emissions of nitrogen oxide (if applicable) | $NO_x$(**) | - | mg/kWh input GCV | | | | | |
| GWP of the refrigerant | - | 675 | kg $CO_{2\ eq}$ (100 years) | | | | | |
| Standard rating conditions used | Medium temperature application | | | | | | | |
| Contact details | See the back cover of the manual | | | | | | | |

(*)If $C_{dc}$ is not determined by measurement then the default degradation coefficient of chillers shall be 0.9.
(**)From 26 September 2018.

# Information requirements for comfort chillers

| | |
|---|---|
| Model(s): | 3-PH 16kW(heating 9kW);3-PH 16kW(heating 6kW);<br>3-PH 16kW(heating 3kW);3-PH 16kW |
| Outdoor side heat exchanger of chiller | Air to water |
| indoor side heat exchanger chiller | Water |
| Type: | compressor driven vapour compression |
| Driver af compressor | Electric motor |

| Item | Symbol | Value | Unit | | Item | Symbol | Value | Unit |
|---|---|---|---|---|---|---|---|---|
| **Rated cooling capacity** | Prated,c | 14 | kW | | **Seasonal space cooling energy efficiency** | $\eta_{s,c}$ | 186 | % |
| Declared capacity for cooling for part load at given outdoor temperature Tj | | | | | Declared energy efficiency ratio for cooling for part load at given outdoor temperature Tj | | | |
| Tj = + 35°C | $P_{dc}$ | 13.8 | kW | | Tj = +35°C | EERd | 2.41 | - |
| Tj = + 30°C | $P_{dc}$ | 10.9 | kW | | Tj = + 30°C | EERd | 3.65 | - |
| Tj = + 25°C | $P_{dc}$ | 6.9 | kW | | Tj = + 25°C | EERd | 5.60 | - |
| Tj = + 20°C | $P_{dc}$ | 3.6 | kW | | Tj = + 20°C | EERd | 7.08 | - |
| | | | | | | | | |
| Degradation co-efficient of chiller (*) | $C_{dc}$ | 0.9 | - | | | | | |
| Power consumption in modes other than "active mode" | | | | | | | | |
| Off mode | $P_{OFF}$ | 0.014 | kW | | Crankcase heater mode | $P_{CK}$ | 0.000 | kW |
| Thermostat-off mode | $P_{TO}$ | 0.024 | kW | | Standby mode | $P_{SB}$ | 0.014 | kW |
| **Other items** | | | | | | | | |
| Capacity control | variable | | | | For air-to-water comfort chillers: air flow rate, outdoor measured | - | 6000 | $m^3/h$ |
| Sound power level, indoors/ outdoors | LWA | -/68 | dB | | For water/brine-to-water chillers: Rated brine or water flow rate, outdoor side heat exchanger | - | N/A | $m^3/h$ |
| Emissions of nitrogen oxide (if applicable) | $NO_x$(**) | - | mg/kWh input GCV | | | | | |
| GWP of the refrigerant | - | 675 | kg $CO_{2\,eq}$ (100 years) | | | | | |
| Standard rating conditions used | Low temperature application | | | | | | | |
| Contact details | See the back cover of the manual | | | | | | | |

(*)If $C_{dc}$ is not determined by measurement then the default degradation coefficient of chillers shall be 0.9.
(**)From 26 September 2018.

# Information requirements for comfort chillers

| | |
|---|---|
| Model(s): | 3-PH 16kW(heating 9kW);3-PH 16kW(heating 6kW);<br>3-PH 16kW(heating 3kW);3-PH 16kW |
| Outdoor side heat exchanger of chiller | Air to water |
| indoor side heat exchanger chiller | Water |
| Type: | compressor driven vapour compression |
| Driver af compressor | Electric motor |

| Item | Symbol | Value | Unit | | Item | Symbol | Value | Unit |
|---|---|---|---|---|---|---|---|---|
| **Rated heat output (*)** | Prated | 16 | kW | | **Seasonal space cooling energy efficiency** | $\eta_{s,c}$ | 263 | % |
| Declared capacity for cooling for part load at given outdoor temperature Tj | | | | | Declared energy efficiency ratio for cooling for part load at given outdoor temperature Tj | | | |
| Tj = + 35°C | $P_{dc}$ | 15.5 | kW | | Tj = +35°C | EERd | 3.35 | - |
| Tj = + 30°C | $P_{dc}$ | 11.6 | kW | | Tj = + 30°C | EERd | 4.90 | - |
| Tj = + 25°C | $P_{dc}$ | 7.5 | kW | | Tj = + 25°C | EERd | 7.91 | - |
| Tj = + 20°C | $P_{dc}$ | 5.1 | kW | | Tj = + 20°C | EERd | 11.29 | - |
| | | | | | | | | |
| Degradation co-efficient of chiller (*) | $C_{dc}$ | 0.9 | - | | | | | |
| Power consumption in modes other than "active mode" | | | | | | | | |
| Off mode | $P_{OFF}$ | 0.014 | kW | | Crankcase heater mode | $P_{CK}$ | 0.000 | kW |
| Thermostat-off mode | $P_{TO}$ | 0.024 | kW | | Standby mode | $P_{SB}$ | 0.014 | kW |
| **Other items** | | | | | | | | |
| Capacity control | variable | | | | For air-to-water comfort chillers: air flow rate, outdoor measured | - | 6000 | $m^3/h$ |
| Sound power level, indoors/ outdoors | LWA | -/68 | dB | | For water/brine-to-water chillers: Rated brine or water flow rate, outdoor side heat exchanger | - | N/A | $m^3/h$ |
| Emissions of nitrogen oxide (if applicable) | $NO_x$(**) | - | mg/kWh input GCV | | | | | |
| GWP of the refrigerant | - | 675 | kg $CO_{2\,eq}$ (100 years) | | | | | |
| Standard rating conditions used | Medium temperature application | | | | | | | |
| Contact details | See the back cover of the manual | | | | | | | |

(*)If $C_{dc}$ is not determined by measurement then the default degradation coefficient of chillers shall be 0.9.
(**)From 26 September 2018.

TCL

Ananda GmbH

Daimlerstr. 6

D-76185 Karlsruhe

Mail:info@ananda-trading.de

# MANUEL DE DONNÉES TECHNIQUES

## Système de pompe à chaleur air-eau Tri-Thermal Monobloc

4kW
4kW(chauffage 3kW)
6kW
6kW(chauffage 3kW)
8kW
8kW(chauffage 3kW)
10kW
10kW(chauffage 3kW)
12kW
12kW(chauffage 3kW)
14kW
14kW(chauffage 3kW)
16kW
16kW(chauffage 3kW)

THML-4D/HBp-A
THMLd-4D/3HBp-A
THML-6D/HBp-A
THMLd-6D/3HBp-A
THML-8D/HBp-A
THMLd-8D/3HBp-A
THML-10D/HBp-A
THMLd-10D/3HBp-A
THML-12D/HBp-A
THMLd-12D/3HBp-A
THML-14D/HBp-A
THMLd-14D/3HBp-A
THML-16D/HBp-A
THMLd-16D/3HBp-A

3-PH 12kW
3-PH 12kW(chauffage 3kW)
3-PH 12kW(chauffage 6kW)
3-PH 12kW(chauffage 9kW)
3-PH 14kW
3-PH 14kW(chauffage 3kW)
3-PH 14kW(chauffage 6kW)
3-PH 14kW(chauffage 9kW)
3-PH 16kW
3-PH 16kW(chauffage 3kW)
3-PH 16kW(chauffage 6kW)
3-PH 16kW(chauffage 9kW)

THML-12S/HBp-A
THMLd-12S/3HBp-A
THMLd-12S/6HBp-A
THMLd-12S/9HBp-A
THML-14S/HBp-A
THMLd-14S/3HBp-A
THMLd-14S/6HBp-A
THMLd-14S/9HBp-A
THML-16S/HBp-A
THMLd-16S/3HBp-A
THMLd-16S/6HBp-A
THMLd-16S/9HBp-A

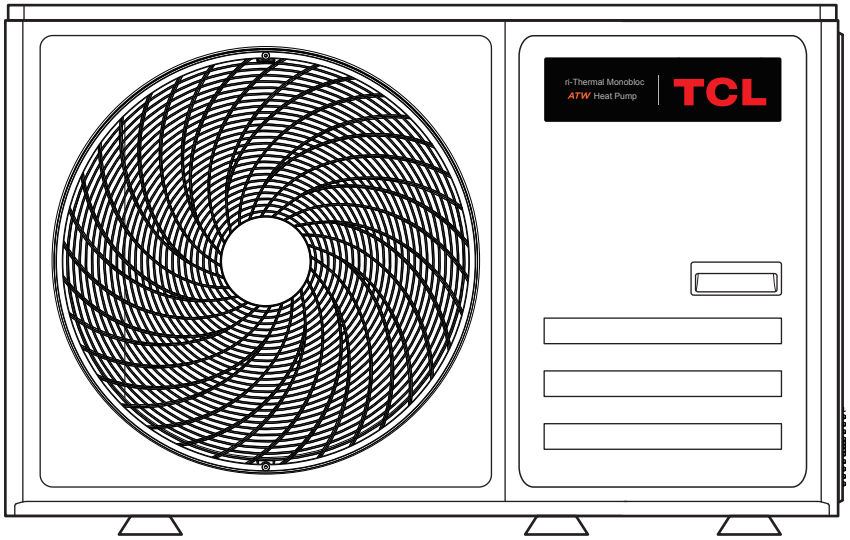


MPORTANT NOTE：
Merci beaucoup pour l'achat de notre produit：
Avant d'utiliser votre appareil, veuillez lire attentivement ce manuel et le conserver pour référence future.

# Paramètres techniques

| | |
|---|---|
| Modèle(s): | 4kW(chauffage 3kW);4kW |
| Pompe à chaleur air-eau | oui |
| Pompe à chaleur eau-eau | non |
| Pompe à chaleur eau glycolée-eau | non |
| Pompe à chaleur basse température | non |
| Équipée d'une résistance de chauffage supplémentaire | non(pour 4kW(chauffage 3kW)) oui(pour 4kW) |
| Chauffe-eau combiné avec pompe à chaleur | non |
| Conditions climatiques déclarées ; | Moyen |
| Les paramètres sont déclarés pour une application basse température; | |

| Article | Symbol | Valeur | Unité | Article | Symbol | Valeur | Unité |
|---|---|---|---|---|---|---|---|
| **Puissance thermique nominale(*)** | Puissance nominale | 5.7 | kW | **Efficacité énergétique saisonnière du chauffage de l'espace** | $\eta_s$ | 182 | % |
| Capacité déclarée pour le chauffage en charge partielle à une température intérieure de 20 °C et une température extérieure de Tj | | | | Capacité déclarée de chauffage pour une charge partielle à une température intérieure de 20°C et une température extérieure de Tj | | | |
| $T_j$ = – 7°C | Puissance nominale | 5.1 | kW | $T_j$ = – 7°C | $COP_d$ | 2.82 | - |
| $T_j$ = + 2°C | $P_{dh}$ | 3.1 | kW | $T_j$ = + 2°C | $COP_d$ | 4.37 | - |
| $T_j$ = + 7°C | $P_{dh}$ | 1.7 | kW | $T_j$ = + 7°C | $COP_d$ | 6.57 | - |
| $T_j$ = + 12°C | $P_{dh}$ | 5.1 | kW | $T_j$ = + 12°C | $COP_d$ | 8.83 | - |
| $T_j$ = température bivalente | $P_{dh}$ | 4.6 | kW | $T_j$ = température bivalente | $COP_d$ | 2.82 | - |
| $T_j$ = température limite d'exploitation | $P_{dh}$ | 11.1 | kW | $T_j$ = température limite d'exploitation | $COP_d$ | 2.60 | - |
| Pour les pompes à chaleur air-eau : Tj = -15°C (si TOL < -20°C) | $P_{dh}$ | N/A | kW | Pour les pompes à chaleur air-eau : Tj = -15°C (si TOL < -20°C) | $COP_d$ | N/A | - |
| Température bivalente | $T_{biv}$ | -7 | °C | Pour les pompes à chaleur air-eau : température limite d'exploitation | TOL | -10 | °C |
| Capacité de cycle pour le chauffage | $P_{cych}$ | N/A | kW | Efficacité de l'intervalle de cycle | $COP_{cyc}$ | N/A | - |
| Coefficient de dégradation (**) | $C_{dh}$ | 0.9 | kW | Température limite de fonctionnement de l'eau de chauffage | WTOL | 65 | °C |
| Consommation électrique en dehors du mode actif | | | | Chauffage d'appoint | | | |
| Mode hors tension | $P_{OFF}$ | 0.010 | kW | | | | |
| Mode thermostat éteint | $P_{TO}$ | 0.010 | kW | Puissance thermique nominale (**) | $p_{sup}$ | 1.1 | KW |
| Mode veille | $P_{SB}$ | 0.010 | kW | Type d'entrée d'énergie | Électrique | | |
| Mode chauffage du carter | $P_{CK}$ | 0.000 | kW | | | | |

| **Autre articles** | | | | | | | |
|---|---|---|---|---|---|---|---|
| Contrôle de la capacité | variables | | | Pour les pompes à chaleur air-eau : Débit d'air nominal, à l'extérieur | - | 2600 | $m^3/h$ |
| Niveau de puissance sonore, intérieur/extérieur | $L_{WA}$ | -56 | dB | Pour les pompes à chaleur eau-eau ou eau saumure-eau : Débit d'eau ou de fluide caloporteur nominal, échangeur de chaleur extérieur | - | N/A | $m^3/h$ |
| Consommation annuelle d'énergie | $Q_{HE}$ | 2559 | kWh | | | | |
| Pour un chauffe-eau combiné avec pompe à chaleur : | | | | | | | |
| **Profil de charge déclaré** | N/A | | | **Efficacité énergétique pour le chauffage de l'eau** | $\eta_{wh}$ | N/A | % |
| Consommation quotidienne d'électricité | $Q_{elec}$ | N/A | kWh | Consommation quotidienne de combustible | $Q_{fuel}$ | N/A | kWh |
| Consommation annuelle d'électricité | AEC | N/A | kWh | Consommation annuelle de combustible | AFC | N/A | GJ |
| Détails de contact | Consultez la couverture arrière du manuel. | | | | | | |

(*) Pour les chauffe-eau thermodynamiques et les chauffe-eau combinés thermodynamiques, la puissance thermique nominale est égale à la charge de conception pour le chauffage, et la puissance thermique nominale d'un chauffage d'appoint est égale à la capacité d'appoint pour le chauffage sup(Tj). (**) Si Cdh n'est pas déterminé par mesure, alors le coefficient de dégradation par défaut est Cdh = 0,9.

# Paramètres techniques

| | |
|---|---|
| Modèle(s): | 4kW(chauffage 3kW);4kW |
| Pompe à chaleur air-eau | oui |
| Pompe à chaleur eau-eau | non |
| Pompe à chaleur eau glycolée-eau | non |
| Pompe à chaleur basse température | non |
| Équipée d'une résistance de chauffage supplémentaire | non(pour 4kW(chauffage 3kW)) oui(pour 4kW) |
| Chauffe-eau combiné avec pompe à chaleur | non |
| Conditions climatiques déclarées ; | plus chaud |
| Les paramètres sont déclarés pour une application basse température; | |

| Article | Symbol | Valeur | Unité | Article | Symbol | Valeur | Unité |
|---|---|---|---|---|---|---|---|
| **Puissance thermique nominale(*)** | Puissance nominale | 5.3 | kW | **Efficacité énergétique saisonnière du chauffage de l'espace** | $\eta_s$ | 264 | % |
| Capacité déclarée pour le chauffage en charge partielle à une température intérieure de 20 °C et une température extérieure de Tj | | | | Capacité déclarée de chauffage pour une charge partielle à une température intérieure de 20°C et une température extérieure de Tj | | | |
| $T_j$ = – 7°C | Puissance nominale | N/A | kW | $T_j$ = – 7°C | $COP_d$ | N/A | - |
| $T_j$ = + 2°C | $P_{dh}$ | 5.3 | kW | $T_j$ = + 2°C | $COP_d$ | 3.39 | - |
| $T_j$ = + 7°C | $P_{dh}$ | 3.4 | kW | $T_j$ = + 7°C | $COP_d$ | 5.81 | - |
| $T_j$ = + 12°C | $P_{dh}$ | 1.7 | kW | $T_j$ = + 12°C | $COP_d$ | 8.62 | - |
| $T_j$ = température bivalente | $P_{dh}$ | 3.4 | kW | $T_j$ = température bivalente | $COP_d$ | 5.81 | - |
| $T_j$ = température limite d'exploitation | $P_{dh}$ | 5.3 | kW | $T_j$ = température limite d'exploitation | $COP_d$ | 3.39 | - |
| Pour les pompes à chaleur air-eau : Tj = -15°C (si TOL < -20°C) | $P_{dh}$ | N/A | kW | Pour les pompes à chaleur air-eau : Tj = -15°C (si TOL < -20°C) | $COP_d$ | N/A | - |
| Température bivalente | $T_{biv}$ | 7 | °C | Pour les pompes à chaleur air-eau : température limite d'exploitation | TOL | 2 | °C |
| Capacité de cycle pour le chauffage | $P_{cych}$ | N/A | kW | Efficacité de l'intervalle de cycle | $COP_{cyc}$ | N/A | - |
| Coefficient de dégradation (**) | $C_{dh}$ | 0.9 | kW | Température limite de fonctionnement de l'eau de chauffage | WTOL | 65 | °C |
| Consommation électrique en dehors du mode actif | | | | Chauffage d'appoint | | | |
| Mode hors tension | $P_{OFF}$ | 0.010 | kW | | | | |
| Mode thermostat éteint | $P_{TO}$ | 0.010 | kW | Puissance thermique nominale (**) | $p_{sup}$ | 0.0 | KW |
| Mode veille | $P_{SB}$ | 0.010 | kW | Type d'entrée d'énergie | Électrique | | |
| Mode chauffage du carter | $P_{CK}$ | 0.000 | kW | | | | |

| **Autre articles** | | | | | | | |
|---|---|---|---|---|---|---|---|
| Contrôle de la capacité | variables | | | Pour les pompes à chaleur air-eau : Débit d'air nominal, à l'extérieur | - | 2600 | $m^3/h$ |
| Niveau de puissance sonore, intérieur/extérieur | $L_{WA}$ | -56 | dB | Pour les pompes à chaleur eau-eau ou eau saumure-eau : Débit d'eau ou de fluide caloporteur nominal, échangeur de chaleur extérieur | - | N/A | $m^3/h$ |
| Consommation annuelle d'énergie | $Q_{HE}$ | 1065 | kWh | | | | |
| Pour un chauffe-eau combiné avec pompe à chaleur : | | | | | | | |
| **Profil de charge déclaré** | N/A | | | **Efficacité énergétique pour le chauffage de l'eau** | $\eta_{wh}$ | N/A | % |
| Consommation quotidienne d'électricité | $Q_{elec}$ | N/A | kWh | Consommation quotidienne de combustible | $Q_{fuel}$ | N/A | kWh |
| Consommation annuelle d'électricité | AEC | N/A | kWh | Consommation annuelle de combustible | AFC | N/A | GJ |
| Détails de contact | Consultez la couverture arrière du manuel. | | | | | | |

(*) Pour les chauffe-eau thermodynamiques et les chauffe-eau combinés thermodynamiques, la puissance thermique nominale est égale à la charge de conception pour le chauffage, et la puissance thermique nominale d'un chauffage d'appoint est égale à la capacité d'appoint pour le chauffage sup(Tj). (**) Si Cdh n'est pas déterminé par mesure, alors le coefficient de dégradation par défaut est Cdh = 0,9.

# Paramètres techniques

| | |
|---|---|
| Modèle(s): | 4kW(chauffage 3kW);4kW |
| Pompe à chaleur air-eau | oui |
| Pompe à chaleur eau-eau | non |
| Pompe à chaleur eau glycolée-eau | non |
| Pompe à chaleur basse température | non |
| Équipée d'une résistance de chauffage supplémentaire | non(pour 4kW(chauffage 3kW)) oui(pour 4kW) |
| Chauffe-eau combiné avec pompe à chaleur | non |
| Conditions climatiques déclarées ; | plus froid |
| Les paramètres sont déclarés pour une application basse température; | |

| Article | Symbol | Valeur | Unité | Article | Symbol | Valeur | Unité |
|---|---|---|---|---|---|---|---|
| **Puissance thermique nominale(*)** | Puissance nominale | 5.0 | kW | **Efficacité énergétique saisonnière du chauffage de l'espace** | $\eta_s$ | 160 | % |
| Capacité déclarée pour le chauffage en charge partielle à une température intérieure de 20 °C et une température extérieure de Tj | | | | Capacité déclarée de chauffage pour une charge partielle à une température intérieure de 20°C et une température extérieure de Tj | | | |
| $T_j$ = – 7°C | Puissance nominale | 3.0 | kW | $T_j$ = – 7°C | $COP_d$ | 3.45 | - |
| $T_j$ = + 2°C | $P_{dh}$ | 1.9 | kW | $T_j$ = + 2°C | $COP_d$ | 5.00 | - |
| $T_j$ = + 7°C | $P_{dh}$ | 1.2 | kW | $T_j$ = + 7°C | $COP_d$ | 5.73 | - |
| $T_j$ = + 12°C | $P_{dh}$ | 1.6 | kW | $T_j$ = + 12°C | $COP_d$ | 7.84 | - |
| $T_j$ = température bivalente | $P_{dh}$ | 4.1 | kW | $T_j$ = température bivalente | $COP_d$ | 2.51 | - |
| $T_j$ = température limite d'exploitation | $P_{dh}$ | 3.3 | kW | $T_j$ = température limite d'exploitation | $COP_d$ | 1.72 | - |
| Pour les pompes à chaleur air-eau : Tj = -15°C (si TOL < -20°C) | $P_{dh}$ | N/A | kW | Pour les pompes à chaleur air-eau : Tj = -15°C (si TOL < -20°C) | $COP_d$ | N/A | - |
| Température bivalente | $T_{biv}$ | -15 | °C | Pour les pompes à chaleur air-eau : température limite d'exploitation | TOL | -22 | °C |
| Capacité de cycle pour le chauffage | $P_{cych}$ | N/A | kW | Efficacité de l'intervalle de cycle | $COP_{cyc}$ | N/A | - |
| Coefficient de dégradation (**) | $C_{dh}$ | 0.9 | kW | Température limite de fonctionnement de l'eau de chauffage | WTOL | 65 | °C |
| Consommation électrique en dehors du mode actif | | | | Chauffage d'appoint | | | |
| Mode hors tension | $P_{OFF}$ | 0.010 | kW | | | | |
| Mode thermostat éteint | $P_{TO}$ | 0.010 | kW | Puissance thermique nominale (**) | $p_{sup}$ | 2.7 | KW |
| Mode veille | $P_{SB}$ | 0.010 | kW | Type d'entrée d'énergie | Électrique | | |
| Mode chauffage du carter | $P_{CK}$ | 0.000 | kW | | | | |

| **Autre articles** | | | | | | | |
|---|---|---|---|---|---|---|---|
| Contrôle de la capacité | variables | | | Pour les pompes à chaleur air-eau : Débit d'air nominal, à l'extérieur | - | 2500 | $m^3/h$ |
| Niveau de puissance sonore, intérieur/extérieur | $L_{WA}$ | -56 | dB | Pour les pompes à chaleur eau-eau ou eau saumure-eau : Débit d'eau ou de fluide caloporteur nominal, échangeur de chaleur extérieur | - | N/A | $m^3/h$ |
| Consommation annuelle d'énergie | $Q_{HE}$ | 3038 | kWh | | | | |
| Pour un chauffe-eau combiné avec pompe à chaleur : | | | | | | | |
| **Profil de charge déclaré** | N/A | | | **Efficacité énergétique pour le chauffage de l'eau** | $\eta_{wh}$ | N/A | % |
| Consommation quotidienne d'électricité | $Q_{elec}$ | N/A | kWh | Consommation quotidienne de combustible | $Q_{fuel}$ | N/A | kWh |
| Consommation annuelle d'électricité | AEC | N/A | kWh | Consommation annuelle de combustible | AFC | N/A | GJ |
| Détails de contact | Consultez la couverture arrière du manuel. | | | | | | |

(*) Pour les chauffe-eau thermodynamiques et les chauffe-eau combinés thermodynamiques, la puissance thermique nominale est égale à la charge de conception pour le chauffage, et la puissance thermique nominale d'un chauffage d'appoint est égale à la capacité d'appoint pour le chauffage sup(Tj). (**) Si Cdh n'est pas déterminé par mesure, alors le coefficient de dégradation par défaut est Cdh = 0,9.

# Paramètres techniques

| | |
|---|---|
| Modèle(s): | 4kW(chauffage 3kW);4kW |
| Pompe à chaleur air-eau | oui |
| Pompe à chaleur eau-eau | non |
| Pompe à chaleur eau glycolée-eau | non |
| Pompe à chaleur basse température | non |
| Équipée d'une résistance de chauffage supplémentaire | non(pour 4kW(chauffage 3kW)) oui(pour 4kW) |
| Chauffe-eau combiné avec pompe à chaleur | non |
| Conditions climatiques déclarées ; | Moyen |

Les paramètres sont déclarés pour une application moyenne température.

| Article | Symbol | Valeur | Unité | Article | Symbol | Valeur | Unité |
|---|---|---|---|---|---|---|---|
| **Puissance thermique nominale(*)** | Puissance nominale | 4.7 | kW | **Efficacité énergétique saisonnière du chauffage de l'espace** | $\eta_s$ | 131 | % |
| Capacité déclarée pour le chauffage en charge partielle à une température intérieure de 20 °C et une température extérieure de Tj | | | | Capacité déclarée de chauffage pour une charge partielle à une température intérieure de 20°C et une température extérieure de Tj | | | |
| $T_j$ = – 7°C | Puissance nominale | 4.2 | kW | $T_j$ = – 7°C | $COP_d$ | 2.14 | - |
| $T_j$ = + 2°C | $P_{dh}$ | 2.5 | kW | $T_j$ = + 2°C | $COP_d$ | 3.26 | - |
| $T_j$ = + 7°C | $P_{dh}$ | 1.7 | kW | $T_j$ = + 7°C | $COP_d$ | 4.44 | - |
| $T_j$ = + 12°C | $P_{dh}$ | 1.4 | kW | $T_j$ = + 12°C | $COP_d$ | 5.54 | - |
| $T_j$ = température bivalente | $P_{dh}$ | 4.2 | kW | $T_j$ = température bivalente | $COP_d$ | 2.14 | - |
| $T_j$ = température limite d'exploitation | $P_{dh}$ | 3.7 | kW | $T_j$ = température limite d'exploitation | $COP_d$ | 1.72 | - |
| Pour les pompes à chaleur air-eau : Tj = -15°C (si TOL < -20°C) | $P_{dh}$ | N/A | kW | Pour les pompes à chaleur air-eau : Tj = -15°C (si TOL < -20°C) | $COP_d$ | N/A | - |
| Température bivalente | $T_{biv}$ | -7 | °C | Pour les pompes à chaleur air-eau : température limite d'exploitation | TOL | -10 | °C |
| Capacité de cycle pour le chauffage | $P_{cych}$ | N/A | kW | Efficacité de l'intervalle de cycle | $COP_{cyc}$ | N/A | - |
| Coefficient de dégradation (**) | $C_{dh}$ | 0.9 | kW | Température limite de fonctionnement de l'eau de chauffage | WTOL | 65 | °C |
| Consommation électrique en dehors du mode actif | | | | Chauffage d'appoint | | | |
| Mode hors tension | $P_{OFF}$ | 0.010 | kW | | | | |
| Mode thermostat éteint | $P_{TO}$ | 0.010 | kW | Puissance thermique nominale (**) | $p_{sup}$ | 1.0 | KW |
| Mode veille | $P_{SB}$ | 0.010 | kW | Type d'entrée d'énergie | Électrique | | |
| Mode chauffage du carter | $P_{CK}$ | 0.000 | kW | | | | |

| **Autre articles** | | | | | | | |
|---|---|---|---|---|---|---|---|
| Contrôle de la capacité | variables | | | Pour les pompes à chaleur air-eau : Débit d'air nominal, à l'extérieur | - | 2600 | $m^3/h$ |
| Niveau de puissance sonore, intérieur/extérieur | $L_{WA}$ | -56 | dB | Pour les pompes à chaleur eau-eau ou eau saumure-eau : Débit d'eau ou de fluide caloporteur nominal, échangeur de chaleur extérieur | - | N/A | $m^3/h$ |
| Consommation annuelle d'énergie | $Q_{HE}$ | 2898 | kWh | | | | |
| Pour un chauffe-eau combiné avec pompe à chaleur : | | | | | | | |
| **Profil de charge déclaré** | N/A | | | **Efficacité énergétique pour le chauffage de l'eau** | $\eta_{wh}$ | N/A | % |
| Consommation quotidienne d'électricité | $Q_{elec}$ | N/A | kWh | Consommation quotidienne de combustible | $Q_{fuel}$ | N/A | kWh |
| Consommation annuelle d'électricité | AEC | N/A | kWh | Consommation annuelle de combustible | AFC | N/A | GJ |
| Détails de contact | Consultez la couverture arrière du manuel. | | | | | | |

(*) Pour les chauffe-eau thermodynamiques et les chauffe-eau combinés thermodynamiques, la puissance thermique nominale est égale à la charge de conception pour le chauffage, et la puissance thermique nominale d'un chauffage d'appoint est égale à la capacité d'appoint pour le chauffage sup(Tj). (**) Si Cdh n'est pas déterminé par mesure, alors le coefficient de dégradation par défaut est Cdh = 0,9.

# Paramètres techniques

| | |
|---|---|
| Modèle(s): | 4kW(chauffage 3kW);4kW |
| Pompe à chaleur air-eau | oui |
| Pompe à chaleur eau-eau | non |
| Pompe à chaleur eau glycolée-eau | non |
| Pompe à chaleur basse température | non |
| Équipée d'une résistance de chauffage supplémentaire | non(pour 4kW(chauffage 3kW)) oui(pour 4kW) |
| Chauffe-eau combiné avec pompe à chaleur | non |
| Conditions climatiques déclarées ; | plus chaud |

Les paramètres sont déclarés pour une application moyenne température.

| Article | Symbol | Valeur | Unité | Article | Symbol | Valeur | Unité |
|---|---|---|---|---|---|---|---|
| **Puissance thermique nominale(*)** | Puissance nominale | 5.0 | kW | **Efficacité énergétique saisonnière du chauffage de l'espace** | $\eta_s$ | 165 | % |
| Capacité déclarée pour le chauffage en charge partielle à une température intérieure de 20 °C et une température extérieure de Tj | | | | Capacité déclarée de chauffage pour une charge partielle à une température intérieure de 20°C et une température extérieure de Tj | | | |
| $T_j$ = – 7°C | Puissance nominale | N/A | kW | $T_j$ = – 7°C | $COP_d$ | N/A | - |
| $T_j$ = + 2°C | $P_{dh}$ | 5.0 | kW | $T_j$ = + 2°C | $COP_d$ | 2.31 | - |
| $T_j$ = + 7°C | $P_{dh}$ | 3.2 | kW | $T_j$ = + 7°C | $COP_d$ | 3.68 | - |
| $T_j$ = + 12°C | $P_{dh}$ | 1.5 | kW | $T_j$ = + 12°C | $COP_d$ | 5.21 | - |
| $T_j$ = température bivalente | $P_{dh}$ | 3.2 | kW | $T_j$ = température bivalente | $COP_d$ | 3.68 | - |
| $T_j$ = température limite d'exploitation | $P_{dh}$ | 5.0 | kW | $T_j$ = température limite d'exploitation | $COP_d$ | 2.31 | - |
| Pour les pompes à chaleur air-eau : Tj = -15°C (si TOL < -20°C) | $P_{dh}$ | N/A | kW | Pour les pompes à chaleur air-eau : Tj = -15°C (si TOL < -20°C) | $COP_d$ | N/A | - |
| Température bivalente | $T_{biv}$ | 7 | °C | Pour les pompes à chaleur air-eau : température limite d'exploitation | TOL | 2 | °C |
| Capacité de cycle pour le chauffage | $P_{cych}$ | N/A | kW | Efficacité de l'intervalle de cycle | $COP_{cyc}$ | N/A | - |
| Coefficient de dégradation (**) | $C_{dh}$ | 0.9 | kW | Température limite de fonctionnement de l'eau de chauffage | WTOL | 65 | °C |
| Consommation électrique en dehors du mode actif | | | | Chauffage d'appoint | | | |
| Mode hors tension | $P_{OFF}$ | 0.010 | kW | | | | |
| Mode thermostat éteint | $P_{TO}$ | 0.010 | kW | Puissance thermique nominale (**) | $p_{sup}$ | 0.0 | KW |
| Mode veille | $P_{SB}$ | 0.010 | kW | Type d'entrée d'énergie | Électrique | | |
| Mode chauffage du carter | $P_{CK}$ | 0.000 | kW | | | | |

| **Autre articles** | | | | | | | |
|---|---|---|---|---|---|---|---|
| Contrôle de la capacité | variables | | | Pour les pompes à chaleur air-eau : Débit d'air nominal, à l'extérieur | - | 2600 | $m^3/h$ |
| Niveau de puissance sonore, intérieur/extérieur | $L_{WA}$ | -56 | dB | Pour les pompes à chaleur eau-eau ou eau saumure-eau : Débit d'eau ou de fluide caloporteur nominal, échangeur de chaleur extérieur | - | N/A | $m^3/h$ |
| Consommation annuelle d'énergie | $Q_{HE}$ | 1604 | kWh | | | | |
| Pour un chauffe-eau combiné avec pompe à chaleur : | | | | | | | |
| **Profil de charge déclaré** | N/A | | | **Efficacité énergétique pour le chauffage de l'eau** | $\eta_{wh}$ | N/A | % |
| Consommation quotidienne d'électricité | $Q_{elec}$ | N/A | kWh | Consommation quotidienne de combustible | $Q_{fuel}$ | N/A | kWh |
| Consommation annuelle d'électricité | AEC | N/A | kWh | Consommation annuelle de combustible | AFC | N/A | GJ |
| Détails de contact | Consultez la couverture arrière du manuel. | | | | | | |

(*) Pour les chauffe-eau thermodynamiques et les chauffe-eau combinés thermodynamiques, la puissance thermique nominale est égale à la charge de conception pour le chauffage, et la puissance thermique nominale d'un chauffage d'appoint est égale à la capacité d'appoint pour le chauffage sup(Tj). (**) Si Cdh n'est pas déterminé par mesure, alors le coefficient de dégradation par défaut est Cdh = 0,9.

# Paramètres techniques

| | |
|---|---|
| Modèle(s): | 4kW(chauffage 3kW);4kW |
| Pompe à chaleur air-eau | oui |
| Pompe à chaleur eau-eau | non |
| Pompe à chaleur eau glycolée-eau | non |
| Pompe à chaleur basse température | non |
| Équipée d'une résistance de chauffage supplémentaire | non(pour 4kW(chauffage 3kW)) oui(pour 4kW) |
| Chauffe-eau combiné avec pompe à chaleur | non |
| Conditions climatiques déclarées ; | plus froid |

Les paramètres sont déclarés pour une application moyenne température.

| Article | Symbol | Valeur | Unité | Article | Symbol | Valeur | Unité |
|---|---|---|---|---|---|---|---|
| **Puissance thermique nominale(*)** | Puissance nominale | 3.7 | kW | **Efficacité énergétique saisonnière du chauffage de l'espace** | $\eta_s$ | 107 | % |
| Capacité déclarée pour le chauffage en charge partielle à une température intérieure de 20 °C et une température extérieure de Tj | | | | Capacité déclarée de chauffage pour une charge partielle à une température intérieure de 20°C et une température extérieure de Tj | | | |
| $T_j$ = – 7°C | Puissance nominale | 2.3 | kW | $T_j$ = – 7°C | $COP_d$ | 2.34 | - |
| $T_j$ = + 2°C | $P_{dh}$ | 1.4 | kW | $T_j$ = + 2°C | $COP_d$ | 3.22 | - |
| $T_j$ = + 7°C | $P_{dh}$ | 1.6 | kW | $T_j$ = + 7°C | $COP_d$ | 4.58 | - |
| $T_j$ = + 12°C | $P_{dh}$ | 1.5 | kW | $T_j$ = + 12°C | $COP_d$ | 6.33 | - |
| $T_j$ = température bivalente | $P_{dh}$ | 3.0 | kW | $T_j$ = température bivalente | $COP_d$ | 1.69 | - |
| $T_j$ = température limite d'exploitation | $P_{dh}$ | 2.5 | kW | $T_j$ = température limite d'exploitation | $COP_d$ | 1.17 | - |
| Pour les pompes à chaleur air-eau : Tj = -15°C (si TOL < -20°C) | $P_{dh}$ | N/A | kW | Pour les pompes à chaleur air-eau : Tj = -15°C (si TOL < -20°C) | $COP_d$ | N/A | - |
| Température bivalente | $T_{biv}$ | -15 | °C | Pour les pompes à chaleur air-eau : température limite d'exploitation | TOL | -22 | °C |
| Capacité de cycle pour le chauffage | $P_{cych}$ | N/A | kW | Efficacité de l'intervalle de cycle | $COP_{cyc}$ | N/A | - |
| Coefficient de dégradation (**) | $C_{dh}$ | 0.9 | kW | Température limite de fonctionnement de l'eau de chauffage | WTOL | 65 | °C |
| Consommation électrique en dehors du mode actif | | | | Chauffage d'appoint | | | |
| Mode hors tension | $P_{OFF}$ | 0.010 | kW | | | | |
| Mode thermostat éteint | $P_{TO}$ | 0.010 | kW | Puissance thermique nominale (**) | $p_{sup}$ | 1.2 | KW |
| Mode veille | $P_{SB}$ | 0.010 | kW | Type d'entrée d'énergie | Électrique | | |
| Mode chauffage du carter | $P_{CK}$ | 0.000 | kW | | | | |

| **Autre articles** | | | | | | | |
|---|---|---|---|---|---|---|---|
| Contrôle de la capacité | variables | | | Pour les pompes à chaleur air-eau : Débit d'air nominal, à l'extérieur | - | 2600 | $m^3/h$ |
| Niveau de puissance sonore, intérieur/extérieur | $L_{WA}$ | -/56 | dB | Pour les pompes à chaleur eau-eau ou eau saumure-eau : Débit d'eau ou de fluide caloporteur nominal, échangeur de chaleur extérieur | - | N/A | $m^3/h$ |
| Consommation annuelle d'énergie | $Q_{HE}$ | 3308 | kWh | | | | |
| Pour un chauffe-eau combiné avec pompe à chaleur : | | | | | | | |
| **Profil de charge déclaré** | N/A | | | **Efficacité énergétique pour le chauffage de l'eau** | $\eta_{wh}$ | N/A | % |
| Consommation quotidienne d'électricité | $Q_{elec}$ | N/A | kWh | Consommation quotidienne de combustible | $Q_{fuel}$ | N/A | kWh |
| Consommation annuelle d'électricité | AEC | N/A | kWh | Consommation annuelle de combustible | AFC | N/A | GJ |
| Détails de contact | Consultez la couverture arrière du manuel. | | | | | | |

(*) Pour les chauffe-eau thermodynamiques et les chauffe-eau combinés thermodynamiques, la puissance thermique nominale est égale à la charge de conception pour le chauffage, et la puissance thermique nominale d'un chauffage d'appoint est égale à la capacité d'appoint pour le chauffage sup(Tj). (**) Si Cdh n'est pas déterminé par mesure, alors le coefficient de dégradation par défaut est Cdh = 0,9.

# Paramètres techniques

| | |
|---|---|
| Modèle(s): | 6kW(chauffage 3kW);6kW |
| Pompe à chaleur air-eau | oui |
| Pompe à chaleur eau-eau | non |
| Pompe à chaleur eau glycolée-eau | non |
| Pompe à chaleur basse température | non |
| Équipée d'une résistance de chauffage supplémentaire | non(pour 6kW(chauffage 3kW)) oui(pour 6kW) |
| Chauffe-eau combiné avec pompe à chaleur | non |
| Conditions climatiques déclarées ; | Moyen |

Les paramètres sont déclarés pour une application basse température;

| Article | Symbol | Valeur | Unité | Article | Symbol | Valeur | Unité |
|---|---|---|---|---|---|---|---|
| **Puissance thermique nominale(*)** | Puissance nominale | 7.0 | kW | **Efficacité énergétique saisonnière du chauffage de l'espace** | $\eta_s$ | 182.7 | % |
| Capacité déclarée pour le chauffage en charge partielle à une température intérieure de 20 °C et une température extérieure de Tj | | | | Capacité déclarée de chauffage pour une charge partielle à une température intérieure de 20°C et une température extérieure de Tj | | | |
| $T_j$ = – 7°C | Puissance nominale | 6.2 | kW | $T_j$ = – 7°C | $COP_d$ | 2.74 | - |
| $T_j$ = + 2°C | $P_{dh}$ | 3.6 | kW | $T_j$ = + 2°C | $COP_d$ | 4.39 | - |
| $T_j$ = + 7°C | $P_{dh}$ | 2.5 | kW | $T_j$ = + 7°C | $COP_d$ | 6.72 | - |
| $T_j$ = + 12°C | $P_{dh}$ | 1.4 | kW | $T_j$ = + 12°C | $COP_d$ | 8.13 | - |
| $T_j$ = température bivalente | $P_{dh}$ | 6.2 | kW | $T_j$ = température bivalente | $COP_d$ | 2.74 | - |
| $T_j$ = température limite d'exploitation | $P_{dh}$ | 6.0 | kW | $T_j$ = température limite d'exploitation | $COP_d$ | 2.55 | - |
| Pour les pompes à chaleur air-eau : Tj = -15°C (si TOL < -20°C) | $P_{dh}$ | N/A | kW | Pour les pompes à chaleur air-eau : Tj = -15°C (si TOL < -20°C) | $COP_d$ | N/A | - |
| Température bivalente | $T_{biv}$ | -7 | °C | Pour les pompes à chaleur air-eau : température limite d'exploitation | TOL | -10 | °C |
| Capacité de cycle pour le chauffage | $P_{cych}$ | N/A | kW | Efficacité de l'intervalle de cycle | $COP_{cyc}$ | N/A | - |
| Coefficient de dégradation (**) | $C_{dh}$ | 0.9 | kW | Température limite de fonctionnement de l'eau de chauffage | WTOL | 65 | °C |
| Consommation électrique en dehors du mode actif | | | | Chauffage d'appoint | | | |
| Mode hors tension | $P_{OFF}$ | 0.010 | kW | | | | |
| Mode thermostat éteint | $P_{TO}$ | 0.010 | kW | Puissance thermique nominale (**) | $p_{sup}$ | 1.0 | KW |
| Mode veille | $P_{SB}$ | 0.010 | kW | Type d'entrée d'énergie | Électrique | | |
| Mode chauffage du carter | $P_{CK}$ | 0.000 | kW | | | | |

| **Autre articles** | | | | | | | |
|---|---|---|---|---|---|---|---|
| Contrôle de la capacité | variables | | | Pour les pompes à chaleur air-eau : Débit d'air nominal, à l'extérieur | - | 2800 | $m^3/h$ |
| Niveau de puissance sonore, intérieur/extérieur | $L_{WA}$ | -/59 | dB | Pour les pompes à chaleur eau-eau ou eau saumure-eau : Débit d'eau ou de fluide caloporteur nominal, échangeur de chaleur extérieur | - | N/A | $m^3/h$ |
| Consommation annuelle d'énergie | $Q_{HE}$ | 3120 | kWh | | | | |
| Pour un chauffe-eau combiné avec pompe à chaleur : | | | | | | | |
| **Profil de charge déclaré** | N/A | | | **Efficacité énergétique pour le chauffage de l'eau** | $\eta_{wh}$ | N/A | % |
| Consommation quotidienne d'électricité | $Q_{elec}$ | N/A | kWh | Consommation quotidienne de combustible | $Q_{fuel}$ | N/A | kWh |
| Consommation annuelle d'électricité | AEC | N/A | kWh | Consommation annuelle de combustible | AFC | N/A | GJ |
| Détails de contact | Consultez la couverture arrière du manuel. | | | | | | |

(*) Pour les chauffe-eau thermodynamiques et les chauffe-eau combinés thermodynamiques, la puissance thermique nominale est égale à la charge de conception pour le chauffage, et la puissance thermique nominale d'un chauffage d'appoint est égale à la capacité d'appoint pour le chauffage sup(Tj). (**) Si Cdh n'est pas déterminé par mesure, alors le coefficient de dégradation par défaut est Cdh = 0,9.

# Paramètres techniques

| | |
|---|---|
| Modèle(s): | 6kW(chauffage 3kW);6kW |
| Pompe à chaleur air-eau | oui |
| Pompe à chaleur eau-eau | non |
| Pompe à chaleur eau glycolée-eau | non |
| Pompe à chaleur basse température | non |
| Équipée d'une résistance de chauffage supplémentaire | non(pour 6kW(chauffage 3kW)) oui(pour 6kW) |
| Chauffe-eau combiné avec pompe à chaleur | non |
| Conditions climatiques déclarées ; | plus chaud |

Les paramètres sont déclarés pour une application basse température;

| Article | Symbol | Valeur | Unité | Article | Symbol | Valeur | Unité |
|---|---|---|---|---|---|---|---|
| **Puissance thermique nominale(*)** | Puissance nominale | 6.0 | kW | **Efficacité énergétique saisonnière du chauffage de l'espace** | $\eta_s$ | 264 | % |
| Capacité déclarée pour le chauffage en charge partielle à une température intérieure de 20 °C et une température extérieure de Tj | | | | Capacité déclarée de chauffage pour une charge partielle à une température intérieure de 20°C et une température extérieure de Tj | | | |
| $T_j$ = – 7°C | Puissance nominale | N/A | kW | $T_j$ = – 7°C | $COP_d$ | N/A | - |
| $T_j$ = + 2°C | $P_{dh}$ | 5.9 | kW | $T_j$ = + 2°C | $COP_d$ | 3.49 | - |
| $T_j$ = + 7°C | $P_{dh}$ | 3.9 | kW | $T_j$ = + 7°C | $COP_d$ | 5.71 | - |
| $T_j$ = + 12°C | $P_{dh}$ | 2.0 | kW | $T_j$ = + 12°C | $COP_d$ | 8.78 | - |
| $T_j$ = température bivalente | $P_{dh}$ | 3.9 | kW | $T_j$ = température bivalente | $COP_d$ | 5.71 | - |
| $T_j$ = température limite d'exploitation | $P_{dh}$ | 5.9 | kW | $T_j$ = température limite d'exploitation | $COP_d$ | 3.49 | - |
| Pour les pompes à chaleur air-eau : Tj = -15°C (si TOL < -20°C) | $P_{dh}$ | N/A | kW | Pour les pompes à chaleur air-eau : Tj = -15°C (si TOL < -20°C) | $COP_d$ | N/A | - |
| Température bivalente | $T_{biv}$ | 7 | °C | Pour les pompes à chaleur air-eau : température limite d'exploitation | TOL | 2 | °C |
| Capacité de cycle pour le chauffage | $P_{cych}$ | N/A | kW | Efficacité de l'intervalle de cycle | $COP_{cyc}$ | N/A | - |
| Coefficient de dégradation (**) | $C_{dh}$ | 0.9 | kW | Température limite de fonctionnement de l'eau de chauffage | WTOL | 65 | °C |
| Consommation électrique en dehors du mode actif | | | | Chauffage d'appoint | | | |
| Mode hors tension | $P_{OFF}$ | 0.010 | kW | | | | |
| Mode thermostat éteint | $P_{TO}$ | 0.010 | kW | Puissance thermique nominale (**) | $p_{sup}$ | 0.1 | KW |
| Mode veille | $P_{SB}$ | 0.010 | kW | Type d'entrée d'énergie | Électrique | | |
| Mode chauffage du carter | $P_{CK}$ | 0.000 | kW | | | | |

| **Autre articles** | | | | | | | |
|---|---|---|---|---|---|---|---|
| Contrôle de la capacité | variables | | | Pour les pompes à chaleur air-eau : Débit d'air nominal, à l'extérieur | - | 2800 | $m^3/h$ |
| Niveau de puissance sonore, intérieur/extérieur | $L_{WA}$ | -/59 | dB | Pour les pompes à chaleur eau-eau ou eau saumure-eau : Débit d'eau ou de fluide caloporteur nominal, échangeur de chaleur extérieur | - | N/A | $m^3/h$ |
| Consommation annuelle d'énergie | $Q_{HE}$ | 1202 | kWh | | | | |
| Pour un chauffe-eau combiné avec pompe à chaleur : | | | | | | | |
| **Profil de charge déclaré** | N/A | | | **Efficacité énergétique pour le chauffage de l'eau** | $\eta_{wh}$ | N/A | % |
| Consommation quotidienne d'électricité | $Q_{elec}$ | N/A | kWh | Consommation quotidienne de combustible | $Q_{fuel}$ | N/A | kWh |
| Consommation annuelle d'électricité | AEC | N/A | kWh | Consommation annuelle de combustible | AFC | N/A | GJ |
| Détails de contact | Consultez la couverture arrière du manuel. | | | | | | |

(*) Pour les chauffe-eau thermodynamiques et les chauffe-eau combinés thermodynamiques, la puissance thermique nominale est égale à la charge de conception pour le chauffage, et la puissance thermique nominale d'un chauffage d'appoint est égale à la capacité d'appoint pour le chauffage sup(Tj). (**) Si Cdh n'est pas déterminé par mesure, alors le coefficient de dégradation par défaut est Cdh = 0,9.

# Paramètres techniques

| | |
|---|---|
| Modèle(s): | 6kW(chauffage 3kW);6kW |
| Pompe à chaleur air-eau | oui |
| Pompe à chaleur eau-eau | non |
| Pompe à chaleur eau glycolée-eau | non |
| Pompe à chaleur basse température | non |
| Équipée d'une résistance de chauffage supplémentaire | non(pour 6kW(chauffage 3kW)) oui(pour 6kW) |
| Chauffe-eau combiné avec pompe à chaleur | non |
| Conditions climatiques déclarées ; | plus froid |

Les paramètres sont déclarés pour une application basse température;

| Article | Symbol | Valeur | Unité | Article | Symbol | Valeur | Unité |
|---|---|---|---|---|---|---|---|
| **Puissance thermique nominale(*)** | Puissance nominale | 6.0 | kW | **Efficacité énergétique saisonnière du chauffage de l'espace** | $\eta_s$ | 166 | % |
| Capacité déclarée pour le chauffage en charge partielle à une température intérieure de 20 °C et une température extérieure de Tj | | | | Capacité déclarée de chauffage pour une charge partielle à une température intérieure de 20°C et une température extérieure de Tj | | | |
| $T_j$ = – 7°C | Puissance nominale | 3.6 | kW | $T_j$ = – 7°C | $COP_d$ | 3.51 | - |
| $T_j$ = + 2°C | $P_{dh}$ | 2.2 | kW | $T_j$ = + 2°C | $COP_d$ | 5.36 | - |
| $T_j$ = + 7°C | $P_{dh}$ | 1.5 | kW | $T_j$ = + 7°C | $COP_d$ | 6.66 | - |
| $T_j$ = + 12°C | $P_{dh}$ | 1.6 | kW | $T_j$ = + 12°C | $COP_d$ | 7.97 | - |
| $T_j$ = température bivalente | $P_{dh}$ | 4.9 | kW | $T_j$ = température bivalente | $COP_d$ | 2.39 | - |
| $T_j$ = température limite d'exploitation | $P_{dh}$ | 3.6 | kW | $T_j$ = température limite d'exploitation | $COP_d$ | 1.78 | - |
| Pour les pompes à chaleur air-eau : Tj = -15°C (si TOL < -20°C) | $P_{dh}$ | N/A | kW | Pour les pompes à chaleur air-eau : Tj = -15°C (si TOL < -20°C) | $COP_d$ | N/A | - |
| Température bivalente | $T_{biv}$ | -15 | °C | Pour les pompes à chaleur air-eau : température limite d'exploitation | TOL | -22 | °C |
| Capacité de cycle pour le chauffage | $P_{cych}$ | N/A | kW | Efficacité de l'intervalle de cycle | $COP_{cyc}$ | N/A | - |
| Coefficient de dégradation (**) | $C_{dh}$ | 0.9 | kW | Température limite de fonctionnement de l'eau de chauffage | WTOL | 65 | °C |
| Consommation électrique en dehors du mode actif | | | | Chauffage d'appoint | | | |
| Mode hors tension | $P_{OFF}$ | 0.010 | kW | | | | |
| Mode thermostat éteint | $P_{TO}$ | 0.010 | kW | Puissance thermique nominale (**) | $p_{sup}$ | 2.4 | KW |
| Mode veille | $P_{SB}$ | 0.010 | kW | Type d'entrée d'énergie | Électrique | | |
| Mode chauffage du carter | $P_{CK}$ | 0.000 | kW | | | | |

| **Autre articles** | | | | | | | |
|---|---|---|---|---|---|---|---|
| Contrôle de la capacité | variables | | | Pour les pompes à chaleur air-eau : Débit d'air nominal, à l'extérieur | - | 2800 | $m^3/h$ |
| Niveau de puissance sonore, intérieur/extérieur | $L_{WA}$ | -/59 | dB | Pour les pompes à chaleur eau-eau ou eau saumure-eau : Débit d'eau ou de fluide caloporteur nominal, échangeur de chaleur extérieur | - | N/A | $m^3/h$ |
| Consommation annuelle d'énergie | $Q_{HE}$ | 3515 | kWh | | | | |
| Pour un chauffe-eau combiné avec pompe à chaleur : | | | | | | | |
| **Profil de charge déclaré** | N/A | | | **Efficacité énergétique pour le chauffage de l'eau** | $\eta_{wh}$ | N/A | % |
| Consommation quotidienne d'électricité | $Q_{elec}$ | N/A | kWh | Consommation quotidienne de combustible | $Q_{fuel}$ | N/A | kWh |
| Consommation annuelle d'électricité | AEC | N/A | kWh | Consommation annuelle de combustible | AFC | N/A | GJ |
| Détails de contact | Consultez la couverture arrière du manuel. | | | | | | |

(*) Pour les chauffe-eau thermodynamiques et les chauffe-eau combinés thermodynamiques, la puissance thermique nominale est égale à la charge de conception pour le chauffage, et la puissance thermique nominale d'un chauffage d'appoint est égale à la capacité d'appoint pour le chauffage sup(Tj). (**) Si Cdh n'est pas déterminé par mesure, alors le coefficient de dégradation par défaut est Cdh = 0,9.

# Paramètres techniques

| | |
|---|---|
| Modèle(s): | 6kW(chauffage 3kW);6kW |
| Pompe à chaleur air-eau | oui |
| Pompe à chaleur eau-eau | non |
| Pompe à chaleur eau glycolée-eau | non |
| Pompe à chaleur basse température | non |
| Équipée d'une résistance de chauffage supplémentaire | non(pour 6 kW(chauffage 3kW)) oui(pour 6kW) |
| Chauffe-eau combiné avec pompe à chaleur | non |
| Conditions climatiques déclarées ; | Moyen |

Les paramètres sont déclarés pour une application moyenne température.

| Article | Symbol | Valeur | Unité | Article | Symbol | Valeur | Unité |
|---|---|---|---|---|---|---|---|
| **Puissance thermique nominale(*)** | Puissance nominale | 6.0 | kW | **Efficacité énergétique saisonnière du chauffage de l'espace** | $\eta_s$ | 137 | % |
| Capacité déclarée pour le chauffage en charge partielle à une température intérieure de 20 °C et une température extérieure de Tj | | | | Capacité déclarée de chauffage pour une charge partielle à une température intérieure de 20°C et une température extérieure de Tj | | | |
| $T_j$ = – 7°C | Puissance nominale | 5.3 | kW | $T_j$ = – 7°C | $COP_d$ | 2.12 | - |
| $T_j$ = + 2°C | $P_{dh}$ | 3.2 | kW | $T_j$ = + 2°C | $COP_d$ | 3.43 | - |
| $T_j$ = + 7°C | $P_{dh}$ | 2.1 | kW | $T_j$ = + 7°C | $COP_d$ | 4.63 | - |
| $T_j$ = + 12°C | $P_{dh}$ | 1.4 | kW | $T_j$ = + 12°C | $COP_d$ | 5.70 | - |
| $T_j$ = température bivalente | $P_{dh}$ | 5.3 | kW | $T_j$ = température bivalente | $COP_d$ | 2.12 | - |
| $T_j$ = température limite d'exploitation | $P_{dh}$ | 5.0 | kW | $T_j$ = température limite d'exploitation | $COP_d$ | 1.81 | - |
| Pour les pompes à chaleur air-eau : Tj = -15°C (si TOL < -20°C) | $P_{dh}$ | N/A | kW | Pour les pompes à chaleur air-eau : Tj = -15°C (si TOL < -20°C) | $COP_d$ | N/A | - |
| Température bivalente | $T_{biv}$ | -7 | °C | Pour les pompes à chaleur air-eau : température limite d'exploitation | TOL | -10 | °C |
| Capacité de cycle pour le chauffage | $P_{cych}$ | N/A | kW | Efficacité de l'intervalle de cycle | $COP_{cyc}$ | N/A | - |
| Coefficient de dégradation (**) | $C_{dh}$ | 0.9 | kW | Température limite de fonctionnement de l'eau de chauffage | WTOL | 65 | °C |
| Consommation électrique en dehors du mode actif | | | | Chauffage d'appoint | | | |
| Mode hors tension | $P_{OFF}$ | 0.010 | kW | | | | |
| Mode thermostat éteint | $P_{TO}$ | 0.010 | kW | Puissance thermique nominale (**) | $p_{sup}$ | 1.0 | KW |
| Mode veille | $P_{SB}$ | 0.010 | kW | Type d'entrée d'énergie | Électrique | | |
| Mode chauffage du carter | $P_{CK}$ | 0.000 | kW | | | | |

| **Autre articles** | | | | | | | |
|---|---|---|---|---|---|---|---|
| Contrôle de la capacité | variables | | | Pour les pompes à chaleur air-eau : Débit d'air nominal, à l'extérieur | - | 2800 | $m^3/h$ |
| Niveau de puissance sonore, intérieur/extérieur | $L_{WA}$ | -/59 | dB | Pour les pompes à chaleur eau-eau ou eau saumure-eau : Débit d'eau ou de fluide caloporteur nominal, échangeur de chaleur extérieur | - | N/A | $m^3/h$ |
| Consommation annuelle d'énergie | $Q_{HE}$ | 3557 | kWh | | | | |
| Pour un chauffe-eau combiné avec pompe à chaleur : | | | | | | | |
| **Profil de charge déclaré** | N/A | | | **Efficacité énergétique pour le chauffage de l'eau** | $\eta_{wh}$ | N/A | % |
| Consommation quotidienne d'électricité | $Q_{elec}$ | N/A | kWh | Consommation quotidienne de combustible | $Q_{fuel}$ | N/A | kWh |
| Consommation annuelle d'électricité | AEC | N/A | kWh | Consommation annuelle de combustible | AFC | N/A | GJ |
| Détails de contact | Consultez la couverture arrière du manuel. | | | | | | |

(*) Pour les chauffe-eau thermodynamiques et les chauffe-eau combinés thermodynamiques, la puissance thermique nominale est égale à la charge de conception pour le chauffage, et la puissance thermique nominale d'un chauffage d'appoint est égale à la capacité d'appoint pour le chauffage sup(Tj). (**) Si Cdh n'est pas déterminé par mesure, alors le coefficient de dégradation par défaut est Cdh = 0,9.

# Paramètres techniques

| | |
|---|---|
| Modèle(s): | 6kW(chauffage 3kW);6kW |
| Pompe à chaleur air-eau | oui |
| Pompe à chaleur eau-eau | non |
| Pompe à chaleur eau glycolée-eau | non |
| Pompe à chaleur basse température | non |
| Équipée d'une résistance de chauffage supplémentaire | non(pour 6kW(chauffage 3kW)) oui(pour 6kW) |
| Chauffe-eau combiné avec pompe à chaleur | non |
| Conditions climatiques déclarées ; | plus chaud |

Les paramètres sont déclarés pour une application moyenne température.

| Article | Symbol | Valeur | Unité | Article | Symbol | Valeur | Unité |
|---|---|---|---|---|---|---|---|
| **Puissance thermique nominale(*)** | Puissance nominale | 5.0 | kW | **Efficacité énergétique saisonnière du chauffage de l'espace** | $\eta_s$ | 166 | % |
| Capacité déclarée pour le chauffage en charge partielle à une température intérieure de 20 °C et une température extérieure de Tj | | | | Capacité déclarée de chauffage pour une charge partielle à une température intérieure de 20°C et une température extérieure de Tj | | | |
| $T_j$ = – 7°C | Puissance nominale | N/A | kW | $T_j$ = – 7°C | $COP_d$ | N/A | - |
| $T_j$ = + 2°C | $P_{dh}$ | 5.0 | kW | $T_j$ = + 2°C | $COP_d$ | 2.37 | - |
| $T_j$ = + 7°C | $P_{dh}$ | 3.2 | kW | $T_j$ = + 7°C | $COP_d$ | 3.72 | - |
| $T_j$ = + 12°C | $P_{dh}$ | 1.6 | kW | $T_j$ = + 12°C | $COP_d$ | 5.41 | - |
| $T_j$ = température bivalente | $P_{dh}$ | 3.2 | kW | $T_j$ = température bivalente | $COP_d$ | 3.72 | - |
| $T_j$ = température limite d'exploitation | $P_{dh}$ | 5.0 | kW | $T_j$ = température limite d'exploitation | $COP_d$ | 2.37 | - |
| Pour les pompes à chaleur air-eau : Tj = -15°C (si TOL < -20°C) | $P_{dh}$ | N/A | kW | Pour les pompes à chaleur air-eau : Tj = -15°C (si TOL < -20°C) | $COP_d$ | N/A | - |
| Température bivalente | $T_{biv}$ | -15 | °C | Pour les pompes à chaleur air-eau : température limite d'exploitation | TOL | 2 | °C |
| Capacité de cycle pour le chauffage | $P_{cych}$ | N/A | kW | Efficacité de l'intervalle de cycle | $COP_{cyc}$ | N/A | - |
| Coefficient de dégradation (**) | $C_{dh}$ | 0.9 | kW | Température limite de fonctionnement de l'eau de chauffage | WTOL | 65 | °C |
| Consommation électrique en dehors du mode actif | | | | Chauffage d'appoint | | | |
| Mode hors tension | $P_{OFF}$ | 0.010 | kW | | | | |
| Mode thermostat éteint | $P_{TO}$ | 0.010 | kW | Puissance thermique nominale (**) | $p_{sup}$ | 0.0 | KW |
| Mode veille | $P_{SB}$ | 0.010 | kW | Type d'entrée d'énergie | Électrique | | |
| Mode chauffage du carter | $P_{CK}$ | 0.000 | kW | | | | |

| **Autre articles** | | | | | | | |
|---|---|---|---|---|---|---|---|
| Contrôle de la capacité | variables | | | Pour les pompes à chaleur air-eau : Débit d'air nominal, à l'extérieur | - | 2800 | $m^3/h$ |
| Niveau de puissance sonore, intérieur/extérieur | $L_{WA}$ | -/59 | dB | Pour les pompes à chaleur eau-eau ou eau saumure-eau : Débit d'eau ou de fluide caloporteur nominal, échangeur de chaleur extérieur | - | N/A | $m^3/h$ |
| Consommation annuelle d'énergie | $Q_{HE}$ | 1580 | kWh | | | | |
| Pour un chauffe-eau combiné avec pompe à chaleur : | | | | | | | |
| **Profil de charge déclaré** | N/A | | | **Efficacité énergétique pour le chauffage de l'eau** | $\eta_{wh}$ | N/A | % |
| Consommation quotidienne d'électricité | $Q_{elec}$ | N/A | kWh | Consommation quotidienne de combustible | $Q_{fuel}$ | N/A | kWh |
| Consommation annuelle d'électricité | AEC | N/A | kWh | Consommation annuelle de combustible | AFC | N/A | GJ |
| Détails de contact | Consultez la couverture arrière du manuel. | | | | | | |

(*) Pour les chauffe-eau thermodynamiques et les chauffe-eau combinés thermodynamiques, la puissance thermique nominale est égale à la charge de conception pour le chauffage, et la puissance thermique nominale d'un chauffage d'appoint est égale à la capacité d'appoint pour le chauffage sup(Tj). (**) Si Cdh n'est pas déterminé par mesure, alors le coefficient de dégradation par défaut est Cdh = 0,9.

# Paramètres techniques

| | |
|---|---|
| Modèle(s): | 6kW(chauffage 3kW);6kW |
| Pompe à chaleur air-eau | oui |
| Pompe à chaleur eau-eau | non |
| Pompe à chaleur eau glycolée-eau | non |
| Pompe à chaleur basse température | non |
| Équipée d'une résistance de chauffage supplémentaire | non(pour 6kW(chauffage 3kW)) oui(pour 6kW) |
| Chauffe-eau combiné avec pompe à chaleur | non |
| Conditions climatiques déclarées ; | plus froid |

Les paramètres sont déclarés pour une application moyenne température.

| Article | Symbol | Valeur | Unité | Article | Symbol | Valeur | Unité |
|---|---|---|---|---|---|---|---|
| **Puissance thermique nominale(*)** | Puissance nominale | 5.0 | kW | **Efficacité énergétique saisonnière du chauffage de l'espace** | $\eta_s$ | 133 | % |
| Capacité déclarée pour le chauffage en charge partielle à une température intérieure de 20 °C et une température extérieure de Tj | | | | Capacité déclarée de chauffage pour une charge partielle à une température intérieure de 20°C et une température extérieure de Tj | | | |
| $T_j$ = – 7°C | Puissance nominale | 3.1 | kW | $T_j$ = – 7°C | $COP_d$ | 2.49 | - |
| $T_j$ = + 2°C | $P_{dh}$ | 1.8 | kW | $T_j$ = + 2°C | $COP_d$ | 3.52 | - |
| $T_j$ = + 7°C | $P_{dh}$ | 1.2 | kW | $T_j$ = + 7°C | $COP_d$ | 4.10 | - |
| $T_j$ = + 12°C | $P_{dh}$ | 1.4 | kW | $T_j$ = + 12°C | $COP_d$ | 6.18 | - |
| $T_j$ = température bivalente | $P_{dh}$ | 4.0 | kW | $T_j$ = température bivalente | $COP_d$ | 1.74 | - |
| $T_j$ = température limite d'exploitation | $P_{dh}$ | 2.5 | kW | $T_j$ = température limite d'exploitation | $COP_d$ | 1.17 | - |
| Pour les pompes à chaleur air-eau : Tj = -15°C (si TOL < -20°C) | $P_{dh}$ | N/A | kW | Pour les pompes à chaleur air-eau : Tj = -15°C (si TOL < -20°C) | $COP_d$ | N/A | - |
| Température bivalente | $T_{biv}$ | -15 | °C | Pour les pompes à chaleur air-eau : température limite d'exploitation | TOL | -22 | °C |
| Capacité de cycle pour le chauffage | $P_{cych}$ | N/A | kW | Efficacité de l'intervalle de cycle | $COP_{cyc}$ | N/A | - |
| Coefficient de dégradation (**) | $C_{dh}$ | 0.9 | kW | Température limite de fonctionnement de l'eau de chauffage | WTOL | 65 | °C |
| Consommation électrique en dehors du mode actif | | | | Chauffage d'appoint | | | |
| Mode hors tension | $P_{OFF}$ | 0.010 | kW | | | | |
| Mode thermostat éteint | $P_{TO}$ | 0.010 | kW | Puissance thermique nominale (**) | $p_{sup}$ | 2.5 | KW |
| Mode veille | $P_{SB}$ | 0.010 | kW | Type d'entrée d'énergie | Électrique | | |
| Mode chauffage du carter | $P_{CK}$ | 0.000 | kW | | | | |

| **Autre articles** | | | | | | | |
|---|---|---|---|---|---|---|---|
| Contrôle de la capacité | variables | | | Pour les pompes à chaleur air-eau : Débit d'air nominal, à l'extérieur | - | 2800 | $m^3/h$ |
| Niveau de puissance sonore, intérieur/extérieur | $L_{WA}$ | -/59 | dB | Pour les pompes à chaleur eau-eau ou eau saumure-eau : Débit d'eau ou de fluide caloporteur nominal, échangeur de chaleur extérieur | - | N/A | $m^3/h$ |
| Consommation annuelle d'énergie | $Q_{HE}$ | 4204 | kWh | | | | |
| Pour un chauffe-eau combiné avec pompe à chaleur : | | | | | | | |
| **Profil de charge déclaré** | N/A | | | **Efficacité énergétique pour le chauffage de l'eau** | $\eta_{wh}$ | N/A | % |
| Consommation quotidienne d'électricité | $Q_{elec}$ | N/A | kWh | Consommation quotidienne de combustible | $Q_{fuel}$ | N/A | kWh |
| Consommation annuelle d'électricité | AEC | N/A | kWh | Consommation annuelle de combustible | AFC | N/A | GJ |
| Détails de contact | Consultez la couverture arrière du manuel. | | | | | | |

(*) Pour les chauffe-eau thermodynamiques et les chauffe-eau combinés thermodynamiques, la puissance thermique nominale est égale à la charge de conception pour le chauffage, et la puissance thermique nominale d'un chauffage d'appoint est égale à la capacité d'appoint pour le chauffage sup(Tj). (**) Si Cdh n'est pas déterminé par mesure, alors le coefficient de dégradation par défaut est Cdh = 0,9.

# Paramètres techniques

| | |
|---|---|
| Modèle(s): | 8kW(chauffage 3kW);8kW |
| Pompe à chaleur air-eau | oui |
| Pompe à chaleur eau-eau | non |
| Pompe à chaleur eau glycolée-eau | non |
| Pompe à chaleur basse température | non |
| Équipée d'une résistance de chauffage supplémentaire | non(pour 8 kW(chauffage 3kW)) oui(pour 8kW) |
| Chauffe-eau combiné avec pompe à chaleur | non |
| Conditions climatiques déclarées ; | Moyen |

Les paramètres sont déclarés pour une application basse température;

| Article | Symbol | Valeur | Unité | Article | Symbol | Valeur | Unité |
|---|---|---|---|---|---|---|---|
| **Puissance thermique nominale(*)** | Puissance nominale | 8 | kW | **Efficacité énergétique saisonnière du chauffage de l'espace** | $\eta_s$ | 200 | % |
| Capacité déclarée pour le chauffage en charge partielle à une température intérieure de 20 °C et une température extérieure de Tj | | | | Capacité déclarée de chauffage pour une charge partielle à une température intérieure de 20°C et une température extérieure de Tj | | | |
| $T_j$ = – 7°C | Puissance nominale | 7.1 | kW | $T_j$ = – 7°C | $COP_d$ | 3.12 | - |
| $T_j$ = + 2°C | $P_{dh}$ | 4.7 | kW | $T_j$ = + 2°C | $COP_d$ | 4.99 | - |
| $T_j$ = + 7°C | $P_{dh}$ | 3.0 | kW | $T_j$ = + 7°C | $COP_d$ | 6.81 | - |
| $T_j$ = + 12°C | $P_{dh}$ | 1.7 | kW | $T_j$ = + 12°C | $COP_d$ | 8.00 | - |
| $T_j$ = température bivalente | $P_{dh}$ | 7.1 | kW | $T_j$ = température bivalente | $COP_d$ | 3.12 | - |
| $T_j$ = température limite d'exploitation | $P_{dh}$ | 6.5 | kW | $T_j$ = température limite d'exploitation | $COP_d$ | 2.84 | - |
| Pour les pompes à chaleur air-eau : Tj = -15°C (si TOL < -20°C) | $P_{dh}$ | N/A | kW | Pour les pompes à chaleur air-eau : Tj = -15°C (si TOL < -20°C) | $COP_d$ | N/A | - |
| Température bivalente | $T_{biv}$ | -7 | °C | Pour les pompes à chaleur air-eau : température limite d'exploitation | TOL | -10 | °C |
| Capacité de cycle pour le chauffage | $P_{cych}$ | N/A | kW | Efficacité de l'intervalle de cycle | $COP_{cyc}$ | N/A | - |
| Coefficient de dégradation (**) | $C_{dh}$ | 0.9 | kW | Température limite de fonctionnement de l'eau de chauffage | WTOL | 65 | °C |
| Consommation électrique en dehors du mode actif | | | | Chauffage d'appoint | | | |
| Mode hors tension | $P_{OFF}$ | 0.010 | kW | | | | |
| Mode thermostat éteint | $P_{TO}$ | 0.010 | kW | Puissance thermique nominale (**) | $p_{sup}$ | 1.5 | KW |
| Mode veille | $P_{SB}$ | 0.010 | kW | Type d'entrée d'énergie | Électrique | | |
| Mode chauffage du carter | $P_{CK}$ | 0.000 | kW | | | | |

| **Autre articles** | | | | | | | |
|---|---|---|---|---|---|---|---|
| Contrôle de la capacité | variables | | | Pour les pompes à chaleur air-eau : Débit d'air nominal, à l'extérieur | - | 4000 | $m^3/h$ |
| Niveau de puissance sonore, intérieur/extérieur | $L_{WA}$ | -/60 | dB | Pour les pompes à chaleur eau-eau ou eau saumure-eau : Débit d'eau ou de fluide caloporteur nominal, échangeur de chaleur extérieur | - | N/A | $m^3/h$ |
| Consommation annuelle d'énergie | $Q_{HE}$ | 3276 | kWh | | | | |
| Pour un chauffe-eau combiné avec pompe à chaleur : | | | | | | | |
| **Profil de charge déclaré** | N/A | | | **Efficacité énergétique pour le chauffage de l'eau** | $\eta_{wh}$ | N/A | % |
| Consommation quotidienne d'électricité | $Q_{elec}$ | N/A | kWh | Consommation quotidienne de combustible | $Q_{fuel}$ | N/A | kWh |
| Consommation annuelle d'électricité | AEC | N/A | kWh | Consommation annuelle de combustible | AFC | N/A | GJ |
| Détails de contact | Consultez la couverture arrière du manuel. | | | | | | |

(*) Pour les chauffe-eau thermodynamiques et les chauffe-eau combinés thermodynamiques, la puissance thermique nominale est égale à la charge de conception pour le chauffage, et la puissance thermique nominale d'un chauffage d'appoint est égale à la capacité d'appoint pour le chauffage sup(Tj). (**) Si Cdh n'est pas déterminé par mesure, alors le coefficient de dégradation par défaut est Cdh = 0,9.

# Paramètres techniques

| | |
|---|---|
| Modèle(s): | 8kW(chauffage 3kW);8kW |
| Pompe à chaleur air-eau | oui |
| Pompe à chaleur eau-eau | non |
| Pompe à chaleur eau glycolée-eau | non |
| Pompe à chaleur basse température | non |
| Équipée d'une résistance de chauffage supplémentaire | non(pour 8 kW(chauffage 3kW)) oui(pour 8kW) |
| Chauffe-eau combiné avec pompe à chaleur | non |
| Conditions climatiques déclarées ; | plus chaud |

Les paramètres sont déclarés pour une application basse température;

| Article | Symbol | Valeur | Unité | Article | Symbol | Valeur | Unité |
|---|---|---|---|---|---|---|---|
| **Puissance thermique nominale(*)** | Puissance nominale | 8 | kW | **Efficacité énergétique saisonnière du chauffage de l'espace** | $\eta_s$ | 278 | % |
| Capacité déclarée pour le chauffage en charge partielle à une température intérieure de 20 °C et une température extérieure de Tj | | | | Capacité déclarée de chauffage pour une charge partielle à une température intérieure de 20°C et une température extérieure de Tj | | | |
| $T_j$ = – 7°C | Puissance nominale | N/A | kW | $T_j$ = – 7°C | $COP_d$ | N/A | - |
| $T_j$ = + 2°C | $P_{dh}$ | 7.7 | kW | $T_j$ = + 2°C | $COP_d$ | 3.82 | - |
| $T_j$ = + 7°C | $P_{dh}$ | 5.0 | kW | $T_j$ = + 7°C | $COP_d$ | 6.12 | - |
| $T_j$ = + 12°C | $P_{dh}$ | 2.6 | kW | $T_j$ = + 12°C | $COP_d$ | 9.15 | - |
| $T_j$ = température bivalente | $P_{dh}$ | 5.0 | kW | $T_j$ = température bivalente | $COP_d$ | 6.12 | - |
| $T_j$ = température limite d'exploitation | $P_{dh}$ | 7.7 | kW | $T_j$ = température limite d'exploitation | $COP_d$ | 3.82 | - |
| Pour les pompes à chaleur air-eau : Tj = -15°C (si TOL < -20°C) | $P_{dh}$ | N/A | kW | Pour les pompes à chaleur air-eau : Tj = -15°C (si TOL < -20°C) | $COP_d$ | N/A | - |
| Température bivalente | $T_{biv}$ | -15 | °C | Pour les pompes à chaleur air-eau : température limite d'exploitation | TOL | 2 | °C |
| Capacité de cycle pour le chauffage | $P_{cych}$ | N/A | kW | Efficacité de l'intervalle de cycle | $COP_{cyc}$ | N/A | - |
| Coefficient de dégradation (**) | $C_{dh}$ | 0.9 | kW | Température limite de fonctionnement de l'eau de chauffage | WTOL | 65 | °C |
| Consommation électrique en dehors du mode actif | | | | Chauffage d'appoint | | | |
| Mode hors tension | $P_{OFF}$ | 0.010 | kW | | | | |
| Mode thermostat éteint | $P_{TO}$ | 0.010 | kW | Puissance thermique nominale (**) | $p_{sup}$ | 0.3 | KW |
| Mode veille | $P_{SB}$ | 0.010 | kW | Type d'entrée d'énergie | Électrique | | |
| Mode chauffage du carter | $P_{CK}$ | 0.000 | kW | | | | |

| **Autre articles** | | | | | | | |
|---|---|---|---|---|---|---|---|
| Contrôle de la capacité | variables | | | Pour les pompes à chaleur air-eau : Débit d'air nominal, à l'extérieur | - | 4000 | $m^3/h$ |
| Niveau de puissance sonore, intérieur/extérieur | $L_{WA}$ | -/60 | dB | Pour les pompes à chaleur eau-eau ou eau saumure-eau : Débit d'eau ou de fluide caloporteur nominal, échangeur de chaleur extérieur | - | N/A | $m^3/h$ |
| Consommation annuelle d'énergie | $Q_{HE}$ | 1492 | kWh | | | | |
| Pour un chauffe-eau combiné avec pompe à chaleur : | | | | | | | |
| **Profil de charge déclaré** | N/A | | | **Efficacité énergétique pour le chauffage de l'eau** | $\eta_{wh}$ | N/A | % |
| Consommation quotidienne d'électricité | $Q_{elec}$ | N/A | kWh | Consommation quotidienne de combustible | $Q_{fuel}$ | N/A | kWh |
| Consommation annuelle d'électricité | AEC | N/A | kWh | Consommation annuelle de combustible | AFC | N/A | GJ |
| Détails de contact | Consultez la couverture arrière du manuel. | | | | | | |

(*) Pour les chauffe-eau thermodynamiques et les chauffe-eau combinés thermodynamiques, la puissance thermique nominale est égale à la charge de conception pour le chauffage, et la puissance thermique nominale d'un chauffage d'appoint est égale à la capacité d'appoint pour le chauffage sup(Tj). (**) Si Cdh n'est pas déterminé par mesure, alors le coefficient de dégradation par défaut est Cdh = 0,9.

# Paramètres techniques

| | |
|---|---|
| Modèle(s): | 8kW(chauffage 3kW);8kW |
| Pompe à chaleur air-eau | oui |
| Pompe à chaleur eau-eau | non |
| Pompe à chaleur eau glycolée-eau | non |
| Pompe à chaleur basse température | non |
| Équipée d'une résistance de chauffage supplémentaire | non(pour 8 kW(chauffage 3kW)) oui(pour 8kW) |
| Chauffe-eau combiné avec pompe à chaleur | non |
| Conditions climatiques déclarées ; | plus froid |

Les paramètres sont déclarés pour une application basse température;

| Article | Symbol | Valeur | Unité | Article | Symbol | Valeur | Unité |
|---|---|---|---|---|---|---|---|
| **Puissance thermique nominale(*)** | Puissance nominale | 7 | kW | **Efficacité énergétique saisonnière du chauffage de l'espace** | $\eta_s$ | 167 | % |
| Capacité déclarée pour le chauffage en charge partielle à une température intérieure de 20 °C et une température extérieure de Tj | | | | Capacité déclarée de chauffage pour une charge partielle à une température intérieure de 20°C et une température extérieure de Tj | | | |
| $T_j$ = – 7°C | Puissance nominale | 4.4 | kW | $T_j$ = – 7°C | $COP_d$ | 3.59 | - |
| $T_j$ = + 2°C | $P_{dh}$ | 2.6 | kW | $T_j$ = + 2°C | $COP_d$ | 5.30 | - |
| $T_j$ = + 7°C | $P_{dh}$ | 1.6 | kW | $T_j$ = + 7°C | $COP_d$ | 5.98 | - |
| $T_j$ = + 12°C | $P_{dh}$ | 1.9 | kW | $T_j$ = + 12°C | $COP_d$ | 8.42 | - |
| $T_j$ = température bivalente | $P_{dh}$ | 5.7 | kW | $T_j$ = température bivalente | $COP_d$ | 2.61 | - |
| $T_j$ = température limite d'exploitation | $P_{dh}$ | 4.0 | kW | $T_j$ = température limite d'exploitation | $COP_d$ | 1.93 | - |
| Pour les pompes à chaleur air-eau : Tj = -15°C (si TOL < -20°C) | $P_{dh}$ | N/A | kW | Pour les pompes à chaleur air-eau : Tj = -15°C (si TOL < -20°C) | $COP_d$ | N/A | - |
| Température bivalente | $T_{biv}$ | -15 | °C | Pour les pompes à chaleur air-eau : température limite d'exploitation | TOL | -22 | °C |
| Capacité de cycle pour le chauffage | $P_{cych}$ | N/A | kW | Efficacité de l'intervalle de cycle | $COP_{cyc}$ | N/A | - |
| Coefficient de dégradation (**) | $C_{dh}$ | 0.9 | kW | Température limite de fonctionnement de l'eau de chauffage | WTOL | 65 | °C |
| Consommation électrique en dehors du mode actif | | | | Chauffage d'appoint | | | |
| Mode hors tension | $P_{OFF}$ | 0.010 | kW | | | | |
| Mode thermostat éteint | $P_{TO}$ | 0.010 | kW | Puissance thermique nominale (**) | $p_{sup}$ | 3.0 | KW |
| Mode veille | $P_{SB}$ | 0.010 | kW | Type d'entrée d'énergie | Électrique | | |
| Mode chauffage du carter | $P_{CK}$ | 0.000 | kW | | | | |

| **Autre articles** | | | | | | | |
|---|---|---|---|---|---|---|---|
| Contrôle de la capacité | variables | | | Pour les pompes à chaleur air-eau : Débit d'air nominal, à l'extérieur | - | 4000 | $m^3/h$ |
| Niveau de puissance sonore, intérieur/extérieur | $L_{WA}$ | -/60 | dB | Pour les pompes à chaleur eau-eau ou eau saumure-eau : Débit d'eau ou de fluide caloporteur nominal, échangeur de chaleur extérieur | - | N/A | $m^3/h$ |
| Consommation annuelle d'énergie | $Q_{HE}$ | 4044 | kWh | | | | |
| Pour un chauffe-eau combiné avec pompe à chaleur : | | | | | | | |
| **Profil de charge déclaré** | N/A | | | **Efficacité énergétique pour le chauffage de l'eau** | $\eta_{wh}$ | N/A | % |
| Consommation quotidienne d'électricité | $Q_{elec}$ | N/A | kWh | Consommation quotidienne de combustible | $Q_{fuel}$ | N/A | kWh |
| Consommation annuelle d'électricité | AEC | N/A | kWh | Consommation annuelle de combustible | AFC | N/A | GJ |
| Détails de contact | Consultez la couverture arrière du manuel. | | | | | | |

(*) Pour les chauffe-eau thermodynamiques et les chauffe-eau combinés thermodynamiques, la puissance thermique nominale est égale à la charge de conception pour le chauffage, et la puissance thermique nominale d'un chauffage d'appoint est égale à la capacité d'appoint pour le chauffage sup(Tj). (**) Si Cdh n'est pas déterminé par mesure, alors le coefficient de dégradation par défaut est Cdh = 0,9.

# Paramètres techniques

| | |
|---|---|
| Modèle(s): | 8kW(chauffage 3kW);8kW |
| Pompe à chaleur air-eau | oui |
| Pompe à chaleur eau-eau | non |
| Pompe à chaleur eau glycolée-eau | non |
| Pompe à chaleur basse température | non |
| Équipée d'une résistance de chauffage supplémentaire | non(pour 8 kW(chauffage 3kW)) oui(pour 8kW) |
| Chauffe-eau combiné avec pompe à chaleur | non |
| Conditions climatiques déclarées ; | Moyen |

Les paramètres sont déclarés pour une application moyenne température.

| Article | Symbol | Valeur | Unité | Article | Symbol | Valeur | Unité |
|---|---|---|---|---|---|---|---|
| **Puissance thermique nominale(*)** | Puissance nominale | 7 | kW | **Efficacité énergétique saisonnière du chauffage de l'espace** | $\eta_s$ | 136 | % |
| Capacité déclarée pour le chauffage en charge partielle à une température intérieure de 20 °C et une température extérieure de Tj | | | | Capacité déclarée de chauffage pour une charge partielle à une température intérieure de 20°C et une température extérieure de Tj | | | |
| $T_j$ = – 7°C | Puissance nominale | 5.8 | kW | $T_j$ = – 7°C | $COP_d$ | 2.20 | - |
| $T_j$ = + 2°C | $P_{dh}$ | 3.7 | kW | $T_j$ = + 2°C | $COP_d$ | 3.37 | - |
| $T_j$ = + 7°C | $P_{dh}$ | 2.4 | kW | $T_j$ = + 7°C | $COP_d$ | 4..57 | - |
| $T_j$ = + 12°C | $P_{dh}$ | 1.6 | kW | $T_j$ = + 12°C | $COP_d$ | 5.87 | - |
| $T_j$ = température bivalente | $P_{dh}$ | 5.8 | kW | $T_j$ = température bivalente | $COP_d$ | 2.20 | - |
| $T_j$ = température limite d'exploitation | $P_{dh}$ | 5.0 | kW | $T_j$ = température limite d'exploitation | $COP_d$ | 1.84 | - |
| Pour les pompes à chaleur air-eau : Tj = -15°C (si TOL < -20°C) | $P_{dh}$ | N/A | kW | Pour les pompes à chaleur air-eau : Tj = -15°C (si TOL < -20°C) | $COP_d$ | N/A | - |
| Température bivalente | $T_{biv}$ | -7 | °C | Pour les pompes à chaleur air-eau : température limite d'exploitation | TOL | -10 | °C |
| Capacité de cycle pour le chauffage | $P_{cych}$ | N/A | kW | Efficacité de l'intervalle de cycle | $COP_{cyc}$ | N/A | - |
| Coefficient de dégradation (**) | $C_{dh}$ | 0.9 | kW | Température limite de fonctionnement de l'eau de chauffage | WTOL | 65 | °C |
| Consommation électrique en dehors du mode actif | | | | Chauffage d'appoint | | | |
| Mode hors tension | $P_{OFF}$ | 0.010 | kW | | | | |
| Mode thermostat éteint | $P_{TO}$ | 0.010 | kW | Puissance thermique nominale (**) | $p_{sup}$ | 2.0 | KW |
| Mode veille | $P_{SB}$ | 0.010 | kW | Type d'entrée d'énergie | Électrique | | |
| Mode chauffage du carter | $P_{CK}$ | 0.000 | kW | | | | |

| **Autre articles** | | | | | | | |
|---|---|---|---|---|---|---|---|
| Contrôle de la capacité | variables | | | Pour les pompes à chaleur air-eau : Débit d'air nominal, à l'extérieur | - | 4000 | $m^3/h$ |
| Niveau de puissance sonore, intérieur/extérieur | $L_{WA}$ | -/60 | dB | Pour les pompes à chaleur eau-eau ou eau saumure-eau : Débit d'eau ou de fluide caloporteur nominal, échangeur de chaleur extérieur | - | N/A | $m^3/h$ |
| Consommation annuelle d'énergie | $Q_{HE}$ | 3937 | kWh | | | | |
| Pour un chauffe-eau combiné avec pompe à chaleur : | | | | | | | |
| **Profil de charge déclaré** | N/A | | | **Efficacité énergétique pour le chauffage de l'eau** | $\eta_{wh}$ | N/A | % |
| Consommation quotidienne d'électricité | $Q_{elec}$ | N/A | kWh | Consommation quotidienne de combustible | $Q_{fuel}$ | N/A | kWh |
| Consommation annuelle d'électricité | AEC | N/A | kWh | Consommation annuelle de combustible | AFC | N/A | GJ |
| Détails de contact | Consultez la couverture arrière du manuel. | | | | | | |

(*) Pour les chauffe-eau thermodynamiques et les chauffe-eau combinés thermodynamiques, la puissance thermique nominale est égale à la charge de conception pour le chauffage, et la puissance thermique nominale d'un chauffage d'appoint est égale à la capacité d'appoint pour le chauffage sup(Tj). (**) Si Cdh n'est pas déterminé par mesure, alors le coefficient de dégradation par défaut est Cdh = 0,9.

# Paramètres techniques

| | |
|---|---|
| Modèle(s): | 8kW(chauffage 3kW);8kW |
| Pompe à chaleur air-eau | oui |
| Pompe à chaleur eau-eau | non |
| Pompe à chaleur eau glycolée-eau | non |
| Pompe à chaleur basse température | non |
| Équipée d'une résistance de chauffage supplémentaire | non(pour 8 kW(chauffage 3kW)) oui(pour 8kW) |
| Chauffe-eau combiné avec pompe à chaleur | non |
| Conditions climatiques déclarées ; | plus chaud |

Les paramètres sont déclarés pour une application moyenne température.

| Article | Symbol | Valeur | Unité | Article | Symbol | Valeur | Unité |
|---|---|---|---|---|---|---|---|
| **Puissance thermique nominale(*)** | Puissance nominale | 8 | kW | **Efficacité énergétique saisonnière du chauffage de l'espace** | $\eta_s$ | 171 | % |
| Capacité déclarée pour le chauffage en charge partielle à une température intérieure de 20 °C et une température extérieure de Tj | | | | Capacité déclarée de chauffage pour une charge partielle à une température intérieure de 20°C et une température extérieure de Tj | | | |
| $T_j$ = – 7°C | Puissance nominale | N/A | kW | $T_j$ = – 7°C | $COP_d$ | N/A | - |
| $T_j$ = + 2°C | $P_{dh}$ | 7.4 | kW | $T_j$ = + 2°C | $COP_d$ | 2.52 | - |
| $T_j$ = + 7°C | $P_{dh}$ | 4.9 | kW | $T_j$ = + 7°C | $COP_d$ | 3.60 | - |
| $T_j$ = + 12°C | $P_{dh}$ | 2.2 | kW | $T_j$ = + 12°C | $COP_d$ | 5.80 | - |
| $T_j$ = température bivalente | $P_{dh}$ | 4.9 | kW | $T_j$ = température bivalente | $COP_d$ | 3.60 | - |
| $T_j$ = température limite d'exploitation | $P_{dh}$ | 7.4 | kW | $T_j$ = température limite d'exploitation | $COP_d$ | 2.52 | - |
| Pour les pompes à chaleur air-eau : Tj = -15°C (si TOL < -20°C) | $P_{dh}$ | N/A | kW | Pour les pompes à chaleur air-eau : Tj = -15°C (si TOL < -20°C) | $COP_d$ | N/A | - |
| Température bivalente | $T_{biv}$ | 7 | °C | Pour les pompes à chaleur air-eau : température limite d'exploitation | TOL | 2 | °C |
| Capacité de cycle pour le chauffage | $P_{cych}$ | N/A | kW | Efficacité de l'intervalle de cycle | $COP_{cyc}$ | N/A | - |
| Coefficient de dégradation (**) | $C_{dh}$ | 0.9 | kW | Température limite de fonctionnement de l'eau de chauffage | WTOL | 65 | °C |
| Consommation électrique en dehors du mode actif | | | | Chauffage d'appoint | | | |
| Mode hors tension | $P_{OFF}$ | 0.010 | kW | | | | |
| Mode thermostat éteint | $P_{TO}$ | 0.010 | kW | Puissance thermique nominale (**) | $p_{sup}$ | 3.0 | KW |
| Mode veille | $P_{SB}$ | 0.010 | kW | Type d'entrée d'énergie | Électrique | | |
| Mode chauffage du carter | $P_{CK}$ | 0.000 | kW | | | | |

| **Autre articles** | | | | | | | |
|---|---|---|---|---|---|---|---|
| Contrôle de la capacité | variables | | | Pour les pompes à chaleur air-eau : Débit d'air nominal, à l'extérieur | - | 4000 | $m^3/h$ |
| Niveau de puissance sonore, intérieur/extérieur | $L_{WA}$ | -/60 | dB | Pour les pompes à chaleur eau-eau ou eau saumure-eau : Débit d'eau ou de fluide caloporteur nominal, échangeur de chaleur extérieur | - | N/A | $m^3/h$ |
| Consommation annuelle d'énergie | $Q_{HE}$ | 2347 | kWh | | | | |
| Pour un chauffe-eau combiné avec pompe à chaleur : | | | | | | | |
| **Profil de charge déclaré** | N/A | | | **Efficacité énergétique pour le chauffage de l'eau** | $\eta_{wh}$ | N/A | % |
| Consommation quotidienne d'électricité | $Q_{elec}$ | N/A | kWh | Consommation quotidienne de combustible | $Q_{fuel}$ | N/A | kWh |
| Consommation annuelle d'électricité | AEC | N/A | kWh | Consommation annuelle de combustible | AFC | N/A | GJ |
| Détails de contact | Consultez la couverture arrière du manuel. | | | | | | |

(*) Pour les chauffe-eau thermodynamiques et les chauffe-eau combinés thermodynamiques, la puissance thermique nominale est égale à la charge de conception pour le chauffage, et la puissance thermique nominale d'un chauffage d'appoint est égale à la capacité d'appoint pour le chauffage sup(Tj). (**) Si Cdh n'est pas déterminé par mesure, alors le coefficient de dégradation par défaut est Cdh = 0,9.

# Paramètres techniques

| | |
|---|---|
| Modèle(s): | 8kW(chauffage 3kW);8kW |
| Pompe à chaleur air-eau | oui |
| Pompe à chaleur eau-eau | non |
| Pompe à chaleur eau glycolée-eau | non |
| Pompe à chaleur basse température | non |
| Équipée d'une résistance de chauffage supplémentaire | non(pour 8 kW(chauffage 3kW)) oui(pour 8kW) |
| Chauffe-eau combiné avec pompe à chaleur | non |
| Conditions climatiques déclarées ; | plus froid |

Les paramètres sont déclarés pour une application moyenne température.

| Article | Symbol | Valeur | Unité | Article | Symbol | Valeur | Unité |
|---|---|---|---|---|---|---|---|
| **Puissance thermique nominale(*)** | Puissance nominale | 6 | kW | **Efficacité énergétique saisonnière du chauffage de l'espace** | $\eta_s$ | 115 | % |
| Capacité déclarée pour le chauffage en charge partielle à une température intérieure de 20 °C et une température extérieure de Tj | | | | Capacité déclarée de chauffage pour une charge partielle à une température intérieure de 20°C et une température extérieure de Tj | | | |
| $T_j$ = – 7°C | Puissance nominale | 3.8 | kW | $T_j$ = – 7°C | $COP_d$ | 2.48 | - |
| $T_j$ = + 2°C | $P_{dh}$ | 2.2 | kW | $T_j$ = + 2°C | $COP_d$ | 3.59 | - |
| $T_j$ = + 7°C | $P_{dh}$ | 1.4 | kW | $T_j$ = + 7°C | $COP_d$ | 4.08 | - |
| $T_j$ = + 12°C | $P_{dh}$ | 1.5 | kW | $T_j$ = + 12°C | $COP_d$ | 6.01 | - |
| $T_j$ = température bivalente | $P_{dh}$ | 4.8 | kW | $T_j$ = température bivalente | $COP_d$ | 1.87 | - |
| $T_j$ = température limite d'exploitation | $P_{dh}$ | 3.2 | kW | $T_j$ = température limite d'exploitation | $COP_d$ | 1.31 | - |
| Pour les pompes à chaleur air-eau : Tj = -15°C (si TOL < -20°C) | $P_{dh}$ | N/A | kW | Pour les pompes à chaleur air-eau : Tj = -15°C (si TOL < -20°C) | $COP_d$ | N/A | - |
| Température bivalente | $T_{biv}$ | -15 | °C | Pour les pompes à chaleur air-eau : température limite d'exploitation | TOL | -22 | °C |
| Capacité de cycle pour le chauffage | $P_{cych}$ | N/A | kW | Efficacité de l'intervalle de cycle | $COP_{cyc}$ | N/A | - |
| Coefficient de dégradation (**) | $C_{dh}$ | 0.9 | kW | Température limite de fonctionnement de l'eau de chauffage | WTOL | 65 | °C |
| Consommation électrique en dehors du mode actif | | | | Chauffage d'appoint | | | |
| Mode hors tension | $P_{OFF}$ | 0.010 | kW | | | | |
| Mode thermostat éteint | $P_{TO}$ | 0.010 | kW | Puissance thermique nominale (**) | $p_{sup}$ | 2.8 | KW |
| Mode veille | $P_{SB}$ | 0.010 | kW | Type d'entrée d'énergie | Électrique | | |
| Mode chauffage du carter | $P_{CK}$ | 0.000 | kW | | | | |

| **Autre articles** | | | | | | | |
|---|---|---|---|---|---|---|---|
| Contrôle de la capacité | variables | | | Pour les pompes à chaleur air-eau : Débit d'air nominal, à l'extérieur | - | 4000 | $m^3/h$ |
| Niveau de puissance sonore, intérieur/extérieur | $L_{WA}$ | -/60 | dB | Pour les pompes à chaleur eau-eau ou eau saumure-eau : Débit d'eau ou de fluide caloporteur nominal, échangeur de chaleur extérieur | - | N/A | $m^3/h$ |
| Consommation annuelle d'énergie | $Q_{HE}$ | 4891 | kWh | | | | |
| Pour un chauffe-eau combiné avec pompe à chaleur : | | | | | | | |
| **Profil de charge déclaré** | N/A | | | **Efficacité énergétique pour le chauffage de l'eau** | $\eta_{wh}$ | N/A | % |
| Consommation quotidienne d'électricité | $Q_{elec}$ | N/A | kWh | Consommation quotidienne de combustible | $Q_{fuel}$ | N/A | kWh |
| Consommation annuelle d'électricité | AEC | N/A | kWh | Consommation annuelle de combustible | AFC | N/A | GJ |
| Détails de contact | Consultez la couverture arrière du manuel. | | | | | | |

(*) Pour les chauffe-eau thermodynamiques et les chauffe-eau combinés thermodynamiques, la puissance thermique nominale est égale à la charge de conception pour le chauffage, et la puissance thermique nominale d'un chauffage d'appoint est égale à la capacité d'appoint pour le chauffage sup(Tj). (**) Si Cdh n'est pas déterminé par mesure, alors le coefficient de dégradation par défaut est Cdh = 0,9.

# Paramètres techniques

| | |
|---|---|
| Modèle(s): | 10kW(chauffage 3kW);10kW |
| Pompe à chaleur air-eau | oui |
| Pompe à chaleur eau-eau | non |
| Pompe à chaleur eau glycolée-eau | non |
| Pompe à chaleur basse température | non |
| Équipée d'une résistance de chauffage supplémentaire | non(pour 10 kW(chauffage 3kW)) oui(pour10 kW) |
| Chauffe-eau combiné avec pompe à chaleur | non |
| Conditions climatiques déclarées ; | Moyen |

Les paramètres sont déclarés pour une application basse température;

| Article | Symbol | Valeur | Unité | Article | Symbol | Valeur | Unité |
|---|---|---|---|---|---|---|---|
| **Puissance thermique nominale(*)** | Puissance nominale | 9 | kW | **Efficacité énergétique saisonnière du chauffage de l'espace** | $\eta_s$ | 199 | % |
| Capacité déclarée pour le chauffage en charge partielle à une température intérieure de 20 °C et une température extérieure de Tj | | | | Capacité déclarée de chauffage pour une charge partielle à une température intérieure de 20°C et une température extérieure de Tj | | | |
| $T_j$ = – 7°C | Puissance nominale | 8.0 | kW | $T_j$ = – 7°C | $COP_d$ | 2.99 | - |
| $T_j$ = + 2°C | $P_{dh}$ | 5.0 | kW | $T_j$ = + 2°C | $COP_d$ | 4.97 | - |
| $T_j$ = + 7°C | $P_{dh}$ | 3.1 | kW | $T_j$ = + 7°C | $COP_d$ | 6.78 | - |
| $T_j$ = + 12°C | $P_{dh}$ | 2.0 | kW | $T_j$ = + 12°C | $COP_d$ | 9.10 | - |
| $T_j$ = température bivalente | $P_{dh}$ | 8.0 | kW | $T_j$ = température bivalente | $COP_d$ | 2.99 | - |
| $T_j$ = température limite d'exploitation | $P_{dh}$ | 7.3 | kW | $T_j$ = température limite d'exploitation | $COP_d$ | 2.72 | - |
| Pour les pompes à chaleur air-eau : Tj = -15°C (si TOL < -20°C) | $P_{dh}$ | N/A | kW | Pour les pompes à chaleur air-eau : Tj = -15°C (si TOL < -20°C) | $COP_d$ | N/A | - |
| Température bivalente | $T_{biv}$ | -7 | °C | Pour les pompes à chaleur air-eau : température limite d'exploitation | TOL | -10 | °C |
| Capacité de cycle pour le chauffage | $P_{cych}$ | N/A | kW | Efficacité de l'intervalle de cycle | $COP_{cyc}$ | N/A | - |
| Coefficient de dégradation (**) | $C_{dh}$ | 0.9 | kW | Température limite de fonctionnement de l'eau de chauffage | WTOL | 65 | °C |
| Consommation électrique en dehors du mode actif | | | | Chauffage d'appoint | | | |
| Mode hors tension | $P_{OFF}$ | 0.010 | kW | | | | |
| Mode thermostat éteint | $P_{TO}$ | 0.010 | kW | Puissance thermique nominale (**) | $p_{sup}$ | 1.7 | KW |
| Mode veille | $P_{SB}$ | 0.010 | kW | Type d'entrée d'énergie | Électrique | | |
| Mode chauffage du carter | $P_{CK}$ | 0.000 | kW | | | | |
| **Autre articles** | | | | | | | |
| Contrôle de la capacité | variables | | | Pour les pompes à chaleur air-eau : Débit d'air nominal, à l'extérieur | - | 4500 | $m^3/h$ |
| Niveau de puissance sonore, intérieur/extérieur | $L_{WA}$ | -/61 | dB | Pour les pompes à chaleur eau-eau ou eau saumure-eau : Débit d'eau ou de fluide caloporteur nominal, échangeur de chaleur extérieur | - | N/A | $m^3/h$ |
| Consommation annuelle d'énergie | $Q_{HE}$ | 3702 | kWh | | | | |
| Pour un chauffe-eau combiné avec pompe à chaleur : | | | | | | | |
| **Profil de charge déclaré** | N/A | | | **Efficacité énergétique pour le chauffage de l'eau** | $\eta_{wh}$ | N/A | % |
| Consommation quotidienne d'électricité | $Q_{elec}$ | N/A | kWh | Consommation quotidienne de combustible | $Q_{fuel}$ | N/A | kWh |
| Consommation annuelle d'électricité | AEC | N/A | kWh | Consommation annuelle de combustible | AFC | N/A | GJ |
| Détails de contact | Consultez la couverture arrière du manuel. | | | | | | |

(*) Pour les chauffe-eau thermodynamiques et les chauffe-eau combinés thermodynamiques, la puissance thermique nominale est égale à la charge de conception pour le chauffage, et la puissance thermique nominale d'un chauffage d'appoint est égale à la capacité d'appoint pour le chauffage sup(Tj). (**) Si Cdh n'est pas déterminé par mesure, alors le coefficient de dégradation par défaut est Cdh = 0,9.

# Paramètres techniques

| | |
|---|---|
| Modèle(s): | 10kW(chauffage 3kW);10kW |
| Pompe à chaleur air-eau | oui |
| Pompe à chaleur eau-eau | non |
| Pompe à chaleur eau glycolée-eau | non |
| Pompe à chaleur basse température | non |
| Équipée d'une résistance de chauffage supplémentaire | non(pour 10 kW(chauffage 3kW)) oui(pour 10 kW) |
| Chauffe-eau combiné avec pompe à chaleur | non |
| Conditions climatiques déclarées ; | plus chaud |

Les paramètres sont déclarés pour une application basse température;

| Article | Symbol | Valeur | Unité | Article | Symbol | Valeur | Unité |
|---|---|---|---|---|---|---|---|
| **Puissance thermique nominale(*)** | Puissance nominale | 9 | kW | **Efficacité énergétique saisonnière du chauffage de l'espace** | $\eta_s$ | 268 | % |
| Capacité déclarée pour le chauffage en charge partielle à une température intérieure de 20 °C et une température extérieure de Tj | | | | Capacité déclarée de chauffage pour une charge partielle à une température intérieure de 20°C et une température extérieure de Tj | | | |
| $T_j$ = – 7°C | Puissance nominale | N/A | kW | $T_j$ = – 7°C | $COP_d$ | N/A | - |
| $T_j$ = + 2°C | $P_{dh}$ | 8.4 | kW | $T_j$ = + 2°C | $COP_d$ | 3.67 | - |
| $T_j$ = + 7°C | $P_{dh}$ | 5.5 | kW | $T_j$ = + 7°C | $COP_d$ | 5.99 | - |
| $T_j$ = + 12°C | $P_{dh}$ | 2.4 | kW | $T_j$ = + 12°C | $COP_d$ | 8.73 | - |
| $T_j$ = température bivalente | $P_{dh}$ | 5.5 | kW | $T_j$ = température bivalente | $COP_d$ | 5.99 | - |
| $T_j$ = température limite d'exploitation | $P_{dh}$ | 8.4 | kW | $T_j$ = température limite d'exploitation | $COP_d$ | 3.67 | - |
| Pour les pompes à chaleur air-eau : Tj = -15°C (si TOL < -20°C) | $P_{dh}$ | N/A | kW | Pour les pompes à chaleur air-eau : Tj = -15°C (si TOL < -20°C) | $COP_d$ | N/A | - |
| Température bivalente | $T_{biv}$ | 7 | °C | Pour les pompes à chaleur air-eau : température limite d'exploitation | TOL | 2 | °C |
| Capacité de cycle pour le chauffage | $P_{cych}$ | N/A | kW | Efficacité de l'intervalle de cycle | $COP_{cyc}$ | N/A | - |
| Coefficient de dégradation (**) | $C_{dh}$ | 0.9 | kW | Température limite de fonctionnement de l'eau de chauffage | WTOL | 65 | °C |
| Consommation électrique en dehors du mode actif | | | | Chauffage d'appoint | | | |
| Mode hors tension | $P_{OFF}$ | 0.010 | kW | | | | |
| Mode thermostat éteint | $P_{TO}$ | 0.010 | kW | Puissance thermique nominale (**) | $p_{sup}$ | 0.6 | KW |
| Mode veille | $P_{SB}$ | 0.010 | kW | Type d'entrée d'énergie | Électrique | | |
| Mode chauffage du carter | $P_{CK}$ | 0.000 | kW | | | | |

| **Autre articles** | | | | | | | |
|---|---|---|---|---|---|---|---|
| Contrôle de la capacité | variables | | | Pour les pompes à chaleur air-eau : Débit d'air nominal, à l'extérieur | - | 4500 | $m^3/h$ |
| Niveau de puissance sonore, intérieur/extérieur | $L_{WA}$ | -/61 | dB | Pour les pompes à chaleur eau-eau ou eau saumure-eau : Débit d'eau ou de fluide caloporteur nominal, échangeur de chaleur extérieur | - | N/A | $m^3/h$ |
| Consommation annuelle d'énergie | $Q_{HE}$ | 1694 | kWh | | | | |
| Pour un chauffe-eau combiné avec pompe à chaleur : | | | | | | | |
| **Profil de charge déclaré** | N/A | | | **Efficacité énergétique pour le chauffage de l'eau** | $\eta_{wh}$ | N/A | % |
| Consommation quotidienne d'électricité | $Q_{elec}$ | N/A | kWh | Consommation quotidienne de combustible | $Q_{fuel}$ | N/A | kWh |
| Consommation annuelle d'électricité | AEC | N/A | kWh | Consommation annuelle de combustible | AFC | N/A | GJ |
| Détails de contact | Consultez la couverture arrière du manuel. | | | | | | |

(*) Pour les chauffe-eau thermodynamiques et les chauffe-eau combinés thermodynamiques, la puissance thermique nominale est égale à la charge de conception pour le chauffage, et la puissance thermique nominale d'un chauffage d'appoint est égale à la capacité d'appoint pour le chauffage sup(Tj). (**) Si Cdh n'est pas déterminé par mesure, alors le coefficient de dégradation par défaut est Cdh = 0,9.

# Paramètres techniques

| | |
|---|---|
| Modèle(s): | 10 kW(chauffage 3kW);10 kW |
| Pompe à chaleur air-eau | oui |
| Pompe à chaleur eau-eau | non |
| Pompe à chaleur eau glycolée-eau | non |
| Pompe à chaleur basse température | non |
| Équipée d'une résistance de chauffage supplémentaire | non(pour 10 kW(chauffage 3kW)) oui(pour 10 kW) |
| Chauffe-eau combiné avec pompe à chaleur | non |
| Conditions climatiques déclarées ; | plus froid |

Les paramètres sont déclarés pour une application basse température;

| Article | Symbol | Valeur | Unité | Article | Symbol | Valeur | Unité |
|---|---|---|---|---|---|---|---|
| **Puissance thermique nominale(*)** | Puissance nominale | 8 | kW | **Efficacité énergétique saisonnière du chauffage de l'espace** | $\eta_s$ | 170 | % |
| Capacité déclarée pour le chauffage en charge partielle à une température intérieure de 20 °C et une température extérieure de Tj | | | | Capacité déclarée de chauffage pour une charge partielle à une température intérieure de 20°C et une température extérieure de Tj | | | |
| $T_j$ = – 7°C | Puissance nominale | 4.7 | kW | $T_j$ = – 7°C | $COP_d$ | 3.50 | - |
| $T_j$ = + 2°C | $P_{dh}$ | 3.0 | kW | $T_j$ = + 2°C | $COP_d$ | 5.51 | - |
| $T_j$ = + 7°C | $P_{dh}$ | 2.0 | kW | $T_j$ = + 7°C | $COP_d$ | 6.63 | - |
| $T_j$ = + 12°C | $P_{dh}$ | 1.9 | kW | $T_j$ = + 12°C | $COP_d$ | 8.58 | - |
| $T_j$ = température bivalente | $P_{dh}$ | 6.3 | kW | $T_j$ = température bivalente | $COP_d$ | 2.56 | - |
| $T_j$ = température limite d'exploitation | $P_{dh}$ | 4.6 | kW | $T_j$ = température limite d'exploitation | $COP_d$ | 1.99 | - |
| Pour les pompes à chaleur air-eau : Tj = -15°C (si TOL < -20°C) | $P_{dh}$ | N/A | kW | Pour les pompes à chaleur air-eau : Tj = -15°C (si TOL < -20°C) | $COP_d$ | N/A | - |
| Température bivalente | $T_{biv}$ | -15 | °C | Pour les pompes à chaleur air-eau : température limite d'exploitation | TOL | -22 | °C |
| Capacité de cycle pour le chauffage | $P_{cych}$ | N/A | kW | Efficacité de l'intervalle de cycle | $COP_{cyc}$ | N/A | - |
| Coefficient de dégradation (**) | $C_{dh}$ | 0.9 | kW | Température limite de fonctionnement de l'eau de chauffage | WTOL | 65 | °C |
| Consommation électrique en dehors du mode actif | | | | Chauffage d'appoint | | | |
| Mode hors tension | $P_{OFF}$ | 0.010 | kW | | | | |
| Mode thermostat éteint | $P_{TO}$ | 0.010 | kW | Puissance thermique nominale (**) | $p_{sup}$ | 3.4 | KW |
| Mode veille | $P_{SB}$ | 0.010 | kW | Type d'entrée d'énergie | Électrique | | |
| Mode chauffage du carter | $P_{CK}$ | 0.000 | kW | | | | |

| **Autre articles** | | | | | | | |
|---|---|---|---|---|---|---|---|
| Contrôle de la capacité | variables | | | Pour les pompes à chaleur air-eau : Débit d'air nominal, à l'extérieur | - | 4500 | $m^3/h$ |
| Niveau de puissance sonore, intérieur/extérieur | $L_{WA}$ | -/61 | dB | Pour les pompes à chaleur eau-eau ou eau saumure-eau : Débit d'eau ou de fluide caloporteur nominal, échangeur de chaleur extérieur | - | N/A | $m^3/h$ |
| Consommation annuelle d'énergie | $Q_{HE}$ | 4417 | kWh | | | | |
| Pour un chauffe-eau combiné avec pompe à chaleur : | | | | | | | |
| **Profil de charge déclaré** | N/A | | | **Efficacité énergétique pour le chauffage de l'eau** | $\eta_{wh}$ | N/A | % |
| Consommation quotidienne d'électricité | $Q_{elec}$ | N/A | kWh | Consommation quotidienne de combustible | $Q_{fuel}$ | N/A | kWh |
| Consommation annuelle d'électricité | AEC | N/A | kWh | Consommation annuelle de combustible | AFC | N/A | GJ |
| Détails de contact | Consultez la couverture arrière du manuel. | | | | | | |

(*) Pour les chauffe-eau thermodynamiques et les chauffe-eau combinés thermodynamiques, la puissance thermique nominale est égale à la charge de conception pour le chauffage, et la puissance thermique nominale d'un chauffage d'appoint est égale à la capacité d'appoint pour le chauffage sup(Tj). (**) Si Cdh n'est pas déterminé par mesure, alors le coefficient de dégradation par défaut est Cdh = 0,9.

# Paramètres techniques

| | |
|---|---|
| Modèle(s): | 10kW(chauffage 3kW);10 kW |
| Pompe à chaleur air-eau | oui |
| Pompe à chaleur eau-eau | non |
| Pompe à chaleur eau glycolée-eau | non |
| Pompe à chaleur basse température | non |
| Équipée d'une résistance de chauffage supplémentaire | non(pour 10 kW(chauffage 3kW)) oui(pour 10 kW) |
| Chauffe-eau combiné avec pompe à chaleur | non |
| Conditions climatiques déclarées ; | Moyen |

Les paramètres sont déclarés pour une application moyenne température.

| Article | Symbol | Valeur | Unité | Article | Symbol | Valeur | Unité |
|---|---|---|---|---|---|---|---|
| **Puissance thermique nominale(*)** | Puissance nominale | 8 | kW | **Efficacité énergétique saisonnière du chauffage de l'espace** | $\eta_s$ | 138 | % |
| Capacité déclarée pour le chauffage en charge partielle à une température intérieure de 20 °C et une température extérieure de Tj | | | | Capacité déclarée de chauffage pour une charge partielle à une température intérieure de 20°C et une température extérieure de Tj | | | |
| $T_j$ = – 7°C | Puissance nominale | 6.8 | kW | $T_j$ = – 7°C | $COP_d$ | 2.10 | - |
| $T_j$ = + 2°C | $P_{dh}$ | 4.2 | kW | $T_j$ = + 2°C | $COP_d$ | 3.44 | - |
| $T_j$ = + 7°C | $P_{dh}$ | 2.6 | kW | $T_j$ = + 7°C | $COP_d$ | 4.74 | - |
| $T_j$ = + 12°C | $P_{dh}$ | 1.8 | kW | $T_j$ = + 12°C | $COP_d$ | 6.22 | - |
| $T_j$ = température bivalente | $P_{dh}$ | 6.8 | kW | $T_j$ = température bivalente | $COP_d$ | 2.10 | - |
| $T_j$ = température limite d'exploitation | $P_{dh}$ | 5.2 | kW | $T_j$ = température limite d'exploitation | $COP_d$ | 1.83 | - |
| Pour les pompes à chaleur air-eau : Tj = -15°C (si TOL < -20°C) | $P_{dh}$ | N/A | kW | Pour les pompes à chaleur air-eau : Tj = -15°C (si TOL < -20°C) | $COP_d$ | N/A | - |
| Température bivalente | $T_{biv}$ | -7 | °C | Pour les pompes à chaleur air-eau : température limite d'exploitation | TOL | -10 | °C |
| Capacité de cycle pour le chauffage | $P_{cych}$ | N/A | kW | Efficacité de l'intervalle de cycle | $COP_{cyc}$ | N/A | - |
| Coefficient de dégradation (**) | $C_{dh}$ | 0.9 | kW | Température limite de fonctionnement de l'eau de chauffage | WTOL | 65 | °C |
| Consommation électrique en dehors du mode actif | | | | Chauffage d'appoint | | | |
| Mode hors tension | $P_{OFF}$ | 0.010 | kW | | | | |
| Mode thermostat éteint | $P_{TO}$ | 0.010 | kW | Puissance thermique nominale (**) | $p_{sup}$ | 2.8 | KW |
| Mode veille | $P_{SB}$ | 0.010 | kW | Type d'entrée d'énergie | Électrique | | |
| Mode chauffage du carter | $P_{CK}$ | 0.000 | kW | | | | |

| **Autre articles** | | | | | | | |
|---|---|---|---|---|---|---|---|
| Contrôle de la capacité | variables | | | Pour les pompes à chaleur air-eau : Débit d'air nominal, à l'extérieur | - | 4500 | $m^3/h$ |
| Niveau de puissance sonore, intérieur/extérieur | $L_{WA}$ | -/61 | dB | Pour les pompes à chaleur eau-eau ou eau saumure-eau : Débit d'eau ou de fluide caloporteur nominal, échangeur de chaleur extérieur | - | N/A | $m^3/h$ |
| Consommation annuelle d'énergie | $Q_{HE}$ | 4537 | kWh | | | | |
| Pour un chauffe-eau combiné avec pompe à chaleur : | | | | | | | |
| **Profil de charge déclaré** | N/A | | | **Efficacité énergétique pour le chauffage de l'eau** | $\eta_{wh}$ | N/A | % |
| Consommation quotidienne d'électricité | $Q_{elec}$ | N/A | kWh | Consommation quotidienne de combustible | $Q_{fuel}$ | N/A | kWh |
| Consommation annuelle d'électricité | AEC | N/A | kWh | Consommation annuelle de combustible | AFC | N/A | GJ |
| Détails de contact | Consultez la couverture arrière du manuel. | | | | | | |

(*) Pour les chauffe-eau thermodynamiques et les chauffe-eau combinés thermodynamiques, la puissance thermique nominale est égale à la charge de conception pour le chauffage, et la puissance thermique nominale d'un chauffage d'appoint est égale à la capacité d'appoint pour le chauffage sup(Tj). (**) Si Cdh n'est pas déterminé par mesure, alors le coefficient de dégradation par défaut est Cdh = 0,9.

# Paramètres techniques

| | |
|---|---|
| Modèle(s): | 10kW(chauffage 3kW);10kW |
| Pompe à chaleur air-eau | oui |
| Pompe à chaleur eau-eau | non |
| Pompe à chaleur eau glycolée-eau | non |
| Pompe à chaleur basse température | non |
| Équipée d'une résistance de chauffage supplémentaire | non(pour 10 kW(chauffage 3kW)) oui(pour 10 kW) |
| Chauffe-eau combiné avec pompe à chaleur | non |
| Conditions climatiques déclarées ; | plus chaud |

Les paramètres sont déclarés pour une application moyenne température.

| Article | Symbol | Valeur | Unité | Article | Symbol | Valeur | Unité |
|---|---|---|---|---|---|---|---|
| **Puissance thermique nominale(*)** | Puissance nominale | 8 | kW | **Efficacité énergétique saisonnière du chauffage de l'espace** | $\eta_s$ | 179 | % |
| Capacité déclarée pour le chauffage en charge partielle à une température intérieure de 20 °C et une température extérieure de Tj | | | | Capacité déclarée de chauffage pour une charge partielle à une température intérieure de 20°C et une température extérieure de Tj | | | |
| $T_j$ = – 7°C | Puissance nominale | N/A | kW | $T_j$ = – 7°C | $COP_d$ | N/A | - |
| $T_j$ = + 2°C | $P_{dh}$ | 7.6 | kW | $T_j$ = + 2°C | $COP_d$ | 2.27 | - |
| $T_j$ = + 7°C | $P_{dh}$ | 5.2 | kW | $T_j$ = + 7°C | $COP_d$ | 3.92 | - |
| $T_j$ = + 12°C | $P_{dh}$ | 2.5 | kW | $T_j$ = + 12°C | $COP_d$ | 6.17 | - |
| $T_j$ = température bivalente | $P_{dh}$ | 5.2 | kW | $T_j$ = température bivalente | $COP_d$ | 3.92 | - |
| $T_j$ = température limite d'exploitation | $P_{dh}$ | 7.6 | kW | $T_j$ = température limite d'exploitation | $COP_d$ | 2.27 | - |
| Pour les pompes à chaleur air-eau : Tj = -15°C (si TOL < -20°C) | $P_{dh}$ | N/A | kW | Pour les pompes à chaleur air-eau : Tj = -15°C (si TOL < -20°C) | $COP_d$ | N/A | - |
| Température bivalente | $T_{biv}$ | 7 | °C | Pour les pompes à chaleur air-eau : température limite d'exploitation | TOL | 2 | °C |
| Capacité de cycle pour le chauffage | $P_{cych}$ | N/A | kW | Efficacité de l'intervalle de cycle | $COP_{cyc}$ | N/A | - |
| Coefficient de dégradation (**) | $C_{dh}$ | 0.9 | kW | Température limite de fonctionnement de l'eau de chauffage | WTOL | 65 | °C |
| Consommation électrique en dehors du mode actif | | | | Chauffage d'appoint | | | |
| Mode hors tension | $P_{OFF}$ | 0.010 | kW | | | | |
| Mode thermostat éteint | $P_{TO}$ | 0.010 | kW | Puissance thermique nominale (**) | $p_{sup}$ | 0.4 | KW |
| Mode veille | $P_{SB}$ | 0.010 | kW | Type d'entrée d'énergie | Électrique | | |
| Mode chauffage du carter | $P_{CK}$ | 0.000 | kW | | | | |

| **Autre articles** | | | | | | | |
|---|---|---|---|---|---|---|---|
| Contrôle de la capacité | variables | | | Pour les pompes à chaleur air-eau : Débit d'air nominal, à l'extérieur | - | 4500 | $m^3/h$ |
| Niveau de puissance sonore, intérieur/extérieur | $L_{WA}$ | -/61 | dB | Pour les pompes à chaleur eau-eau ou eau saumure-eau : Débit d'eau ou de fluide caloporteur nominal, échangeur de chaleur extérieur | - | N/A | $m^3/h$ |
| Consommation annuelle d'énergie | $Q_{HE}$ | 2353 | kWh | | | | |
| Pour un chauffe-eau combiné avec pompe à chaleur : | | | | | | | |
| **Profil de charge déclaré** | N/A | | | **Efficacité énergétique pour le chauffage de l'eau** | $\eta_{wh}$ | N/A | % |
| Consommation quotidienne d'électricité | $Q_{elec}$ | N/A | kWh | Consommation quotidienne de combustible | $Q_{fuel}$ | N/A | kWh |
| Consommation annuelle d'électricité | AEC | N/A | kWh | Consommation annuelle de combustible | AFC | N/A | GJ |
| Détails de contact | Consultez la couverture arrière du manuel. | | | | | | |

(*) Pour les chauffe-eau thermodynamiques et les chauffe-eau combinés thermodynamiques, la puissance thermique nominale est égale à la charge de conception pour le chauffage, et la puissance thermique nominale d'un chauffage d'appoint est égale à la capacité d'appoint pour le chauffage sup(Tj). (**) Si Cdh n'est pas déterminé par mesure, alors le coefficient de dégradation par défaut est Cdh = 0,9.

# Paramètres techniques

| | |
|---|---|
| Modèle(s): | 10 kW(chauffage 3kW);10kW |
| Pompe à chaleur air-eau | oui |
| Pompe à chaleur eau-eau | non |
| Pompe à chaleur eau glycolée-eau | non |
| Pompe à chaleur basse température | non |
| Équipée d'une résistance de chauffage supplémentaire | non(pour 10 kW(chauffage 3kW)) oui(pour 10 kW) |
| Chauffe-eau combiné avec pompe à chaleur | non |
| Conditions climatiques déclarées ; | plus froid |

Les paramètres sont déclarés pour une application moyenne température.

| Article | Symbol | Valeur | Unité | Article | Symbol | Valeur | Unité |
|---|---|---|---|---|---|---|---|
| **Puissance thermique nominale(*)** | Puissance nominale | 7 | kW | **Efficacité énergétique saisonnière du chauffage de l'espace** | $\eta_s$ | 116 | % |
| Capacité déclarée pour le chauffage en charge partielle à une température intérieure de 20 °C et une température extérieure de Tj | | | | Capacité déclarée de chauffage pour une charge partielle à une température intérieure de 20°C et une température extérieure de Tj | | | |
| $T_j$ = – 7°C | Puissance nominale | 4.1 | kW | $T_j$ = – 7°C | $COP_d$ | 2.53 | - |
| $T_j$ = + 2°C | $P_{dh}$ | 2.6 | kW | $T_j$ = + 2°C | $COP_d$ | 3.51 | - |
| $T_j$ = + 7°C | $P_{dh}$ | 1.7 | kW | $T_j$ = + 7°C | $COP_d$ | 4.52 | - |
| $T_j$ = + 12°C | $P_{dh}$ | 1.7 | kW | $T_j$ = + 12°C | $COP_d$ | 6.51 | - |
| $T_j$ = température bivalente | $P_{dh}$ | 5.5 | kW | $T_j$ = température bivalente | $COP_d$ | 1.92 | - |
| $T_j$ = température limite d'exploitation | $P_{dh}$ | 2.8 | kW | $T_j$ = température limite d'exploitation | $COP_d$ | 1.24 | - |
| Pour les pompes à chaleur air-eau : Tj = -15°C (si TOL < -20°C) | $P_{dh}$ | N/A | kW | Pour les pompes à chaleur air-eau : Tj = -15°C (si TOL < -20°C) | $COP_d$ | N/A | - |
| Température bivalente | $T_{biv}$ | -15 | °C | Pour les pompes à chaleur air-eau : température limite d'exploitation | TOL | -22 | °C |
| Capacité de cycle pour le chauffage | $P_{cych}$ | N/A | kW | Efficacité de l'intervalle de cycle | $COP_{cyc}$ | N/A | - |
| Coefficient de dégradation (**) | $C_{dh}$ | 0.9 | kW | Température limite de fonctionnement de l'eau de chauffage | WTOL | 65 | °C |
| Consommation électrique en dehors du mode actif | | | | Chauffage d'appoint | | | |
| Mode hors tension | $P_{OFF}$ | 0.010 | kW | | | | |
| Mode thermostat éteint | $P_{TO}$ | 0.010 | kW | Puissance thermique nominale (**) | $p_{sup}$ | 4.2 | KW |
| Mode veille | $P_{SB}$ | 0.010 | kW | Type d'entrée d'énergie | Électrique | | |
| Mode chauffage du carter | $P_{CK}$ | 0.000 | kW | | | | |

| **Autre articles** | | | | | | | |
|---|---|---|---|---|---|---|---|
| Contrôle de la capacité | variables | | | Pour les pompes à chaleur air-eau : Débit d'air nominal, à l'extérieur | - | 4500 | $m^3/h$ |
| Niveau de puissance sonore, intérieur/extérieur | $L_{WA}$ | -/61 | dB | Pour les pompes à chaleur eau-eau ou eau saumure-eau : Débit d'eau ou de fluide caloporteur nominal, échangeur de chaleur extérieur | - | N/A | $m^3/h$ |
| Consommation annuelle d'énergie | $Q_{HE}$ | 5613 | kWh | | | | |
| Pour un chauffe-eau combiné avec pompe à chaleur : | | | | | | | |
| **Profil de charge déclaré** | N/A | | | **Efficacité énergétique pour le chauffage de l'eau** | $\eta_{wh}$ | N/A | % |
| Consommation quotidienne d'électricité | $Q_{elec}$ | N/A | kWh | Consommation quotidienne de combustible | $Q_{fuel}$ | N/A | kWh |
| Consommation annuelle d'électricité | AEC | N/A | kWh | Consommation annuelle de combustible | AFC | N/A | GJ |
| Détails de contact | Consultez la couverture arrière du manuel. | | | | | | |

(*) Pour les chauffe-eau thermodynamiques et les chauffe-eau combinés thermodynamiques, la puissance thermique nominale est égale à la charge de conception pour le chauffage, et la puissance thermique nominale d'un chauffage d'appoint est égale à la capacité d'appoint pour le chauffage sup(Tj). (**) Si Cdh n'est pas déterminé par mesure, alors le coefficient de dégradation par défaut est Cdh = 0,9.

# Paramètres techniques

| | |
|---|---|
| Modèle(s): | 12 kW(chauffage 3kW);12kW |
| Pompe à chaleur air-eau | oui |
| Pompe à chaleur eau-eau | non |
| Pompe à chaleur eau glycolée-eau | non |
| Pompe à chaleur basse température | non |
| Équipée d'une résistance de chauffage supplémentaire | non(pour 12 kW(chauffage 3kW)) oui(pour 12 kW) |
| Chauffe-eau combiné avec pompe à chaleur | non |
| Conditions climatiques déclarées ; | Moyen |

Les paramètres sont déclarés pour une application basse température;

| Article | Symbol | Valeur | Unité | Article | Symbol | Valeur | Unité |
|---|---|---|---|---|---|---|---|
| **Puissance thermique nominale(*)** | Puissance nominale | 12 | kW | **Efficacité énergétique saisonnière du chauffage de l'espace** | $\eta_s$ | 188 | % |
| Capacité déclarée pour le chauffage en charge partielle à une température intérieure de 20 °C et une température extérieure de Tj | | | | Capacité déclarée de chauffage pour une charge partielle à une température intérieure de 20°C et une température extérieure de Tj | | | |
| $T_j$ = – 7°C | Puissance nominale | 10.7 | kW | $T_j$ = – 7°C | $COP_d$ | 2.90 | - |
| $T_j$ = + 2°C | $P_{dh}$ | 7.0 | kW | $T_j$ = + 2°C | $COP_d$ | 4.53 | - |
| $T_j$ = + 7°C | $P_{dh}$ | 4.6 | kW | $T_j$ = + 7°C | $COP_d$ | 6.66 | - |
| $T_j$ = + 12°C | $P_{dh}$ | 4.2 | kW | $T_j$ = + 12°C | $COP_d$ | 8.92 | - |
| $T_j$ = température bivalente | $P_{dh}$ | 10.7 | kW | $T_j$ = température bivalente | $COP_d$ | 2.90 | - |
| $T_j$ = température limite d'exploitation | $P_{dh}$ | 11.4 | kW | $T_j$ = température limite d'exploitation | $COP_d$ | 2.63 | - |
| Pour les pompes à chaleur air-eau : Tj = -15°C (si TOL < -20°C) | $P_{dh}$ | N/A | kW | Pour les pompes à chaleur air-eau : Tj = -15°C (si TOL < -20°C) | $COP_d$ | N/A | - |
| Température bivalente | $T_{biv}$ | -7 | °C | Pour les pompes à chaleur air-eau : température limite d'exploitation | TOL | -10 | °C |
| Capacité de cycle pour le chauffage | $P_{cych}$ | N/A | kW | Efficacité de l'intervalle de cycle | $COP_{cyc}$ | N/A | - |
| Coefficient de dégradation (**) | $C_{dh}$ | 0.9 | kW | Température limite de fonctionnement de l'eau de chauffage | WTOL | 65 | °C |
| Consommation électrique en dehors du mode actif | | | | Chauffage d'appoint | | | |
| Mode hors tension | $P_{OFF}$ | 0.010 | kW | | | | |
| Mode thermostat éteint | $P_{TO}$ | 0.010 | kW | Puissance thermique nominale (**) | $p_{sup}$ | 0.6 | KW |
| Mode veille | $P_{SB}$ | 0.010 | kW | Type d'entrée d'énergie | Électrique | | |
| Mode chauffage du carter | $P_{CK}$ | 0.000 | kW | | | | |

| **Autre articles** | | | | | | | |
|---|---|---|---|---|---|---|---|
| Contrôle de la capacité | variables | | | Pour les pompes à chaleur air-eau : Débit d'air nominal, à l'extérieur | - | 5000 | $m^3/h$ |
| Niveau de puissance sonore, intérieur/extérieur | $L_{WA}$ | -/64 | dB | Pour les pompes à chaleur eau-eau ou eau saumure-eau : Débit d'eau ou de fluide caloporteur nominal, échangeur de chaleur extérieur | - | N/A | $m^3/h$ |
| Consommation annuelle d'énergie | $Q_{HE}$ | 5261 | kWh | | | | |
| Pour un chauffe-eau combiné avec pompe à chaleur : | | | | | | | |
| **Profil de charge déclaré** | N/A | | | **Efficacité énergétique pour le chauffage de l'eau** | $\eta_{wh}$ | N/A | % |
| Consommation quotidienne d'électricité | $Q_{elec}$ | N/A | kWh | Consommation quotidienne de combustible | $Q_{fuel}$ | N/A | kWh |
| Consommation annuelle d'électricité | AEC | N/A | kWh | Consommation annuelle de combustible | AFC | N/A | GJ |
| Détails de contact | Consultez la couverture arrière du manuel. | | | | | | |

(*) Pour les chauffe-eau thermodynamiques et les chauffe-eau combinés thermodynamiques, la puissance thermique nominale est égale à la charge de conception pour le chauffage, et la puissance thermique nominale d'un chauffage d'appoint est égale à la capacité d'appoint pour le chauffage sup(Tj). (**) Si Cdh n'est pas déterminé par mesure, alors le coefficient de dégradation par défaut est Cdh = 0,9.

# Paramètres techniques

| | |
|---|---|
| Modèle(s): | 12 kW(chauffage 3kW);12kW |
| Pompe à chaleur air-eau | oui |
| Pompe à chaleur eau-eau | non |
| Pompe à chaleur eau glycolée-eau | non |
| Pompe à chaleur basse température | non |
| Équipée d'une résistance de chauffage supplémentaire | non(pour 12 kW(chauffage 3kW)) oui(pour 12 kW) |
| Chauffe-eau combiné avec pompe à chaleur | non |
| Conditions climatiques déclarées ; | plus chaud |

Les paramètres sont déclarés pour une application basse température;

| Article | Symbol | Valeur | Unité | Article | Symbol | Valeur | Unité |
|---|---|---|---|---|---|---|---|
| **Puissance thermique nominale(*)** | Puissance nominale | 11 | kW | **Efficacité énergétique saisonnière du chauffage de l'espace** | $\eta_s$ | 253 | % |
| Capacité déclarée pour le chauffage en charge partielle à une température intérieure de 20 °C et une température extérieure de Tj | | | | Capacité déclarée de chauffage pour une charge partielle à une température intérieure de 20°C et une température extérieure de Tj | | | |
| $T_j$ = – 7°C | Puissance nominale | N/A | kW | $T_j$ = – 7°C | $COP_d$ | N/A | - |
| $T_j$ = + 2°C | $P_{dh}$ | 11.1 | kW | $T_j$ = + 2°C | $COP_d$ | 3.62 | - |
| $T_j$ = + 7°C | $P_{dh}$ | 7.1 | kW | $T_j$ = + 7°C | $COP_d$ | 5.64 | - |
| $T_j$ = + 12°C | $P_{dh}$ | 4.7 | kW | $T_j$ = + 12°C | $COP_d$ | 8.33 | - |
| $T_j$ = température bivalente | $P_{dh}$ | 7.1 | kW | $T_j$ = température bivalente | $COP_d$ | 5.64 | - |
| $T_j$ = température limite d'exploitation | $P_{dh}$ | 11.1 | kW | $T_j$ = température limite d'exploitation | $COP_d$ | 3.62 | - |
| Pour les pompes à chaleur air-eau : Tj = -15°C (si TOL < -20°C) | $P_{dh}$ | N/A | kW | Pour les pompes à chaleur air-eau : Tj = -15°C (si TOL < -20°C) | $COP_d$ | N/A | - |
| Température bivalente | $T_{biv}$ | 7 | °C | Pour les pompes à chaleur air-eau : température limite d'exploitation | TOL | 2 | °C |
| Capacité de cycle pour le chauffage | $P_{cych}$ | N/A | kW | Efficacité de l'intervalle de cycle | $COP_{cyc}$ | N/A | - |
| Coefficient de dégradation (**) | $C_{dh}$ | 0.9 | kW | Température limite de fonctionnement de l'eau de chauffage | WTOL | 65 | °C |
| Consommation électrique en dehors du mode actif | | | | Chauffage d'appoint | | | |
| Mode hors tension | $P_{OFF}$ | 0.010 | kW | | | | |
| Mode thermostat éteint | $P_{TO}$ | 0.010 | kW | Puissance thermique nominale (**) | $p_{sup}$ | 0.0 | KW |
| Mode veille | $P_{SB}$ | 0.010 | kW | Type d'entrée d'énergie | Électrique | | |
| Mode chauffage du carter | $P_{CK}$ | 0.000 | kW | | | | |

| **Autre articles** | | | | | | | |
|---|---|---|---|---|---|---|---|
| Contrôle de la capacité | variables | | | Pour les pompes à chaleur air-eau : Débit d'air nominal, à l'extérieur | - | 5000 | $m^3/h$ |
| Niveau de puissance sonore, intérieur/extérieur | $L_{WA}$ | -/64 | dB | Pour les pompes à chaleur eau-eau ou eau saumure-eau : Débit d'eau ou de fluide caloporteur nominal, échangeur de chaleur extérieur | - | N/A | $m^3/h$ |
| Consommation annuelle d'énergie | $Q_{HE}$ | 2326 | kWh | | | | |
| Pour un chauffe-eau combiné avec pompe à chaleur : | | | | | | | |
| **Profil de charge déclaré** | N/A | | | **Efficacité énergétique pour le chauffage de l'eau** | $\eta_{wh}$ | N/A | % |
| Consommation quotidienne d'électricité | $Q_{elec}$ | N/A | kWh | Consommation quotidienne de combustible | $Q_{fuel}$ | N/A | kWh |
| Consommation annuelle d'électricité | AEC | N/A | kWh | Consommation annuelle de combustible | AFC | N/A | GJ |
| Détails de contact | Consultez la couverture arrière du manuel. | | | | | | |

(*) Pour les chauffe-eau thermodynamiques et les chauffe-eau combinés thermodynamiques, la puissance thermique nominale est égale à la charge de conception pour le chauffage, et la puissance thermique nominale d'un chauffage d'appoint est égale à la capacité d'appoint pour le chauffage sup(Tj). (**) Si Cdh n'est pas déterminé par mesure, alors le coefficient de dégradation par défaut est Cdh = 0,9.

# Paramètres techniques

| | |
|---|---|
| Modèle(s): | 12 kW(chauffage 3kW);12kW |
| Pompe à chaleur air-eau | oui |
| Pompe à chaleur eau-eau | non |
| Pompe à chaleur eau glycolée-eau | non |
| Pompe à chaleur basse température | non |
| Équipée d'une résistance de chauffage supplémentaire | non(pour 12 kW(chauffage 3kW)) oui(pour 12 kW) |
| Chauffe-eau combiné avec pompe à chaleur | non |
| Conditions climatiques déclarées ; | plus froid |

Les paramètres sont déclarés pour une application basse température;

| Article | Symbol | Valeur | Unité | Article | Symbol | Valeur | Unité |
|---|---|---|---|---|---|---|---|
| **Puissance thermique nominale(*)** | Puissance nominale | 11 | kW | **Efficacité énergétique saisonnière du chauffage de l'espace** | $\eta_s$ | 163 | % |
| Capacité déclarée pour le chauffage en charge partielle à une température intérieure de 20 °C et une température extérieure de Tj | | | | Capacité déclarée de chauffage pour une charge partielle à une température intérieure de 20°C et une température extérieure de Tj | | | |
| $T_j$ = – 7°C | Puissance nominale | 7.2 | kW | $T_j$ = – 7°C | $COP_d$ | 3.51 | - |
| $T_j$ = + 2°C | $P_{dh}$ | 4.1 | kW | $T_j$ = + 2°C | $COP_d$ | 5.05 | - |
| $T_j$ = + 7°C | $P_{dh}$ | 3.2 | kW | $T_j$ = + 7°C | $COP_d$ | 6.18 | - |
| $T_j$ = + 12°C | $P_{dh}$ | 3.6 | kW | $T_j$ = + 12°C | $COP_d$ | 8.19 | - |
| $T_j$ = température bivalente | $P_{dh}$ | 9.3 | kW | $T_j$ = température bivalente | $COP_d$ | 2.59 | - |
| $T_j$ = température limite d'exploitation | $P_{dh}$ | 7.1 | kW | $T_j$ = température limite d'exploitation | $COP_d$ | 2.08 | - |
| Pour les pompes à chaleur air-eau : Tj = -15°C (si TOL < -20°C) | $P_{dh}$ | N/A | kW | Pour les pompes à chaleur air-eau : Tj = -15°C (si TOL < -20°C) | $COP_d$ | N/A | - |
| Température bivalente | $T_{biv}$ | -15 | °C | Pour les pompes à chaleur air-eau : température limite d'exploitation | TOL | -22 | °C |
| Capacité de cycle pour le chauffage | $P_{cych}$ | N/A | kW | Efficacité de l'intervalle de cycle | $COP_{cyc}$ | N/A | - |
| Coefficient de dégradation (**) | $C_{dh}$ | 0.9 | kW | Température limite de fonctionnement de l'eau de chauffage | WTOL | 65 | °C |
| Consommation électrique en dehors du mode actif | | | | Chauffage d'appoint | | | |
| Mode hors tension | $P_{OFF}$ | 0.010 | kW | | | | |
| Mode thermostat éteint | $P_{TO}$ | 0.010 | kW | Puissance thermique nominale (**) | $p_{sup}$ | 3.9 | KW |
| Mode veille | $P_{SB}$ | 0.010 | kW | Type d'entrée d'énergie | Électrique | | |
| Mode chauffage du carter | $P_{CK}$ | 0.000 | kW | | | | |

| **Autre articles** | | | | | | | |
|---|---|---|---|---|---|---|---|
| Contrôle de la capacité | variables | | | Pour les pompes à chaleur air-eau : Débit d'air nominal, à l'extérieur | - | 5000 | $m^3/h$ |
| Niveau de puissance sonore, intérieur/extérieur | $L_{WA}$ | -/64 | dB | Pour les pompes à chaleur eau-eau ou eau saumure-eau : Débit d'eau ou de fluide caloporteur nominal, échangeur de chaleur extérieur | - | N/A | $m^3/h$ |
| Consommation annuelle d'énergie | $Q_{HE}$ | 6746 | kWh | | | | |
| Pour un chauffe-eau combiné avec pompe à chaleur : | | | | | | | |
| **Profil de charge déclaré** | N/A | | | **Efficacité énergétique pour le chauffage de l'eau** | $\eta_{wh}$ | N/A | % |
| Consommation quotidienne d'électricité | $Q_{elec}$ | N/A | kWh | Consommation quotidienne de combustible | $Q_{fuel}$ | N/A | kWh |
| Consommation annuelle d'électricité | AEC | N/A | kWh | Consommation annuelle de combustible | AFC | N/A | GJ |
| Détails de contact | Consultez la couverture arrière du manuel. | | | | | | |

(*) Pour les chauffe-eau thermodynamiques et les chauffe-eau combinés thermodynamiques, la puissance thermique nominale est égale à la charge de conception pour le chauffage, et la puissance thermique nominale d'un chauffage d'appoint est égale à la capacité d'appoint pour le chauffage sup(Tj). (**) Si Cdh n'est pas déterminé par mesure, alors le coefficient de dégradation par défaut est Cdh = 0,9.

# Paramètres techniques

| | |
|---|---|
| Modèle(s): | 12 kW(chauffage 3kW);12kW |
| Pompe à chaleur air-eau | oui |
| Pompe à chaleur eau-eau | non |
| Pompe à chaleur eau glycolée-eau | non |
| Pompe à chaleur basse température | non |
| Équipée d'une résistance de chauffage supplémentaire | non(pour 12 kW(chauffage 3kW)) oui(pour 12 kW) |
| Chauffe-eau combiné avec pompe à chaleur | non |
| Conditions climatiques déclarées ; | Moyen |

Les paramètres sont déclarés pour une application moyenne température.

| Article | Symbol | Valeur | Unité | Article | Symbol | Valeur | Unité |
|---|---|---|---|---|---|---|---|
| **Puissance thermique nominale(*)** | Puissance nominale | 12 | kW | **Efficacité énergétique saisonnière du chauffage de l'espace** | $\eta_s$ | 136 | % |
| Capacité déclarée pour le chauffage en charge partielle à une température intérieure de 20 °C et une température extérieure de Tj | | | | Capacité déclarée de chauffage pour une charge partielle à une température intérieure de 20°C et une température extérieure de Tj | | | |
| $T_j$ = – 7°C | Puissance nominale | 10.7 | kW | $T_j$ = – 7°C | $COP_d$ | 2.12 | - |
| $T_j$ = + 2°C | $P_{dh}$ | 6.6 | kW | $T_j$ = + 2°C | $COP_d$ | 3.29 | - |
| $T_j$ = + 7°C | $P_{dh}$ | 4.4 | kW | $T_j$ = + 7°C | $COP_d$ | 4.74 | - |
| $T_j$ = + 12°C | $P_{dh}$ | 4.0 | kW | $T_j$ = + 12°C | $COP_d$ | 7.28 | - |
| $T_j$ = température bivalente | $P_{dh}$ | 10.7 | kW | $T_j$ = température bivalente | $COP_d$ | 2.12 | - |
| $T_j$ = température limite d'exploitation | $P_{dh}$ | 9.9 | kW | $T_j$ = température limite d'exploitation | $COP_d$ | 1.82 | - |
| Pour les pompes à chaleur air-eau : Tj = -15°C (si TOL < -20°C) | $P_{dh}$ | N/A | kW | Pour les pompes à chaleur air-eau : Tj = -15°C (si TOL < -20°C) | $COP_d$ | N/A | - |
| Température bivalente | $T_{biv}$ | -7 | °C | Pour les pompes à chaleur air-eau : température limite d'exploitation | TOL | -10 | °C |
| Capacité de cycle pour le chauffage | $P_{cych}$ | N/A | kW | Efficacité de l'intervalle de cycle | $COP_{cyc}$ | N/A | - |
| Coefficient de dégradation (**) | $C_{dh}$ | 0.9 | kW | Température limite de fonctionnement de l'eau de chauffage | WTOL | 65 | °C |
| Consommation électrique en dehors du mode actif | | | | Chauffage d'appoint | | | |
| Mode hors tension | $P_{OFF}$ | 0.010 | kW | | | | |
| Mode thermostat éteint | $P_{TO}$ | 0.010 | kW | Puissance thermique nominale (**) | $p_{sup}$ | 2.1 | KW |
| Mode veille | $P_{SB}$ | 0.010 | kW | Type d'entrée d'énergie | Électrique | | |
| Mode chauffage du carter | $P_{CK}$ | 0.000 | kW | | | | |

| **Autre articles** | | | | | | | |
|---|---|---|---|---|---|---|---|
| Contrôle de la capacité | variables | | | Pour les pompes à chaleur air-eau : Débit d'air nominal, à l'extérieur | - | 5000 | $m^3/h$ |
| Niveau de puissance sonore, intérieur/extérieur | $L_{WA}$ | -/64 | dB | Pour les pompes à chaleur eau-eau ou eau saumure-eau : Débit d'eau ou de fluide caloporteur nominal, échangeur de chaleur extérieur | - | N/A | $m^3/h$ |
| Consommation annuelle d'énergie | $Q_{HE}$ | 7224 | kWh | | | | |
| Pour un chauffe-eau combiné avec pompe à chaleur : | | | | | | | |
| **Profil de charge déclaré** | N/A | | | **Efficacité énergétique pour le chauffage de l'eau** | $\eta_{wh}$ | N/A | % |
| Consommation quotidienne d'électricité | $Q_{elec}$ | N/A | kWh | Consommation quotidienne de combustible | $Q_{fuel}$ | N/A | kWh |
| Consommation annuelle d'électricité | AEC | N/A | kWh | Consommation annuelle de combustible | AFC | N/A | GJ |
| Détails de contact | Consultez la couverture arrière du manuel. | | | | | | |

(*) Pour les chauffe-eau thermodynamiques et les chauffe-eau combinés thermodynamiques, la puissance thermique nominale est égale à la charge de conception pour le chauffage, et la puissance thermique nominale d'un chauffage d'appoint est égale à la capacité d'appoint pour le chauffage sup(Tj). (**) Si Cdh n'est pas déterminé par mesure, alors le coefficient de dégradation par défaut est Cdh = 0,9.

# Paramètres techniques

| | |
|---|---|
| Modèle(s): | 12 kW(chauffage 3kW);12kW |
| Pompe à chaleur air-eau | oui |
| Pompe à chaleur eau-eau | non |
| Pompe à chaleur eau glycolée-eau | non |
| Pompe à chaleur basse température | non |
| Équipée d'une résistance de chauffage supplémentaire | non(pour 12 kW(chauffage 3kW)) oui(pour 12 kW) |
| Chauffe-eau combiné avec pompe à chaleur | non |
| Conditions climatiques déclarées ; | plus chaud |

Les paramètres sont déclarés pour une application moyenne température.

| Article | Symbol | Valeur | Unité | Article | Symbol | Valeur | Unité |
|---|---|---|---|---|---|---|---|
| **Puissance thermique nominale(*)** | Puissance nominale | 12 | kW | **Efficacité énergétique saisonnière du chauffage de l'espace** | $\eta_s$ | 174 | % |
| Capacité déclarée pour le chauffage en charge partielle à une température intérieure de 20 °C et une température extérieure de Tj | | | | Capacité déclarée de chauffage pour une charge partielle à une température intérieure de 20°C et une température extérieure de Tj | | | |
| $T_j$ = – 7°C | Puissance nominale | N/A | kW | $T_j$ = – 7°C | $COP_d$ | N/A | - |
| $T_j$ = + 2°C | $P_{dh}$ | 12.1 | kW | $T_j$ = + 2°C | $COP_d$ | 2.27 | - |
| $T_j$ = + 7°C | $P_{dh}$ | 8.0 | kW | $T_j$ = + 7°C | $COP_d$ | 3.76 | - |
| $T_j$ = + 12°C | $P_{dh}$ | 4.3 | kW | $T_j$ = + 12°C | $COP_d$ | 5.95 | - |
| $T_j$ = température bivalente | $P_{dh}$ | 8.0 | kW | $T_j$ = température bivalente | $COP_d$ | 3.76 | - |
| $T_j$ = température limite d'exploitation | $P_{dh}$ | 12.1 | kW | $T_j$ = température limite d'exploitation | $COP_d$ | 2.27 | - |
| Pour les pompes à chaleur air-eau : Tj = -15°C (si TOL < -20°C) | $P_{dh}$ | N/A | kW | Pour les pompes à chaleur air-eau : Tj = -15°C (si TOL < -20°C) | $COP_d$ | N/A | - |
| Température bivalente | $T_{biv}$ | 7 | °C | Pour les pompes à chaleur air-eau : température limite d'exploitation | TOL | 2 | °C |
| Capacité de cycle pour le chauffage | $P_{cych}$ | N/A | kW | Efficacité de l'intervalle de cycle | $COP_{cyc}$ | N/A | - |
| Coefficient de dégradation (**) | $C_{dh}$ | 0.9 | kW | Température limite de fonctionnement de l'eau de chauffage | WTOL | 65 | °C |
| Consommation électrique en dehors du mode actif | | | | Chauffage d'appoint | | | |
| Mode hors tension | $P_{OFF}$ | 0.010 | kW | | | | |
| Mode thermostat éteint | $P_{TO}$ | 0.010 | kW | Puissance thermique nominale (**) | $p_{sup}$ | 0.0 | KW |
| Mode veille | $P_{SB}$ | 0.010 | kW | Type d'entrée d'énergie | Électrique | | |
| Mode chauffage du carter | $P_{CK}$ | 0.000 | kW | | | | |

| **Autre articles** | | | | | | | |
|---|---|---|---|---|---|---|---|
| Contrôle de la capacité | variables | | | Pour les pompes à chaleur air-eau : Débit d'air nominal, à l'extérieur | - | 5000 | $m^3/h$ |
| Niveau de puissance sonore, intérieur/extérieur | $L_{WA}$ | -/64 | dB | Pour les pompes à chaleur eau-eau ou eau saumure-eau : Débit d'eau ou de fluide caloporteur nominal, échangeur de chaleur extérieur | - | N/A | $m^3/h$ |
| Consommation annuelle d'énergie | $Q_{HE}$ | 3761 | kWh | | | | |
| Pour un chauffe-eau combiné avec pompe à chaleur : | | | | | | | |
| **Profil de charge déclaré** | N/A | | | **Efficacité énergétique pour le chauffage de l'eau** | $\eta_{wh}$ | N/A | % |
| Consommation quotidienne d'électricité | $Q_{elec}$ | N/A | kWh | Consommation quotidienne de combustible | $Q_{fuel}$ | N/A | kWh |
| Consommation annuelle d'électricité | AEC | N/A | kWh | Consommation annuelle de combustible | AFC | N/A | GJ |
| Détails de contact | Consultez la couverture arrière du manuel. | | | | | | |

(*) Pour les chauffe-eau thermodynamiques et les chauffe-eau combinés thermodynamiques, la puissance thermique nominale est égale à la charge de conception pour le chauffage, et la puissance thermique nominale d'un chauffage d'appoint est égale à la capacité d'appoint pour le chauffage sup(Tj). (**) Si Cdh n'est pas déterminé par mesure, alors le coefficient de dégradation par défaut est Cdh = 0,9.

# Paramètres techniques

| | |
|---|---|
| Modèle(s): | 12 kW(chauffage 3kW);12kW |
| Pompe à chaleur air-eau | oui |
| Pompe à chaleur eau-eau | non |
| Pompe à chaleur eau glycolée-eau | non |
| Pompe à chaleur basse température | non |
| Équipée d'une résistance de chauffage supplémentaire | non(pour 12 kW(chauffage 3kW)) oui(pour 12 kW) |
| Chauffe-eau combiné avec pompe à chaleur | non |
| Conditions climatiques déclarées ; | plus froid |

Les paramètres sont déclarés pour une application moyenne température.

| Article | Symbol | Valeur | Unité | Article | Symbol | Valeur | Unité |
|---|---|---|---|---|---|---|---|
| **Puissance thermique nominale(*)** | Puissance nominale | 10 | kW | **Efficacité énergétique saisonnière du chauffage de l'espace** | $\eta_s$ | 119 | % |
| Capacité déclarée pour le chauffage en charge partielle à une température intérieure de 20 °C et une température extérieure de Tj | | | | Capacité déclarée de chauffage pour une charge partielle à une température intérieure de 20°C et une température extérieure de Tj | | | |
| $T_j$ = – 7°C | Puissance nominale | 6.7 | kW | $T_j$ = – 7°C | $COP_d$ | 2.58 | - |
| $T_j$ = + 2°C | $P_{dh}$ | 4.0 | kW | $T_j$ = + 2°C | $COP_d$ | 3.68 | - |
| $T_j$ = + 7°C | $P_{dh}$ | 2.9 | kW | $T_j$ = + 7°C | $COP_d$ | 4.57 | - |
| $T_j$ = + 12°C | $P_{dh}$ | 3.3 | kW | $T_j$ = + 12°C | $COP_d$ | 6.59 | - |
| $T_j$ = température bivalente | $P_{dh}$ | 8.5 | kW | $T_j$ = température bivalente | $COP_d$ | 1.84 | - |
| $T_j$ = température limite d'exploitation | $P_{dh}$ | 4.6 | kW | $T_j$ = température limite d'exploitation | $COP_d$ | 1.21 | - |
| Pour les pompes à chaleur air-eau : Tj = -15°C (si TOL < -20°C) | $P_{dh}$ | N/A | kW | Pour les pompes à chaleur air-eau : Tj = -15°C (si TOL < -20°C) | $COP_d$ | N/A | - |
| Température bivalente | $T_{biv}$ | -15 | °C | Pour les pompes à chaleur air-eau : température limite d'exploitation | TOL | -22 | °C |
| Capacité de cycle pour le chauffage | $P_{cych}$ | N/A | kW | Efficacité de l'intervalle de cycle | $COP_{cyc}$ | N/A | - |
| Coefficient de dégradation (**) | $C_{dh}$ | 0.9 | kW | Température limite de fonctionnement de l'eau de chauffage | WTOL | 65 | °C |
| Consommation électrique en dehors du mode actif | | | | Chauffage d'appoint | | | |
| Mode hors tension | $P_{OFF}$ | 0.010 | kW | | | | |
| Mode thermostat éteint | $P_{TO}$ | 0.010 | kW | Puissance thermique nominale (**) | $p_{sup}$ | 5.4 | KW |
| Mode veille | $P_{SB}$ | 0.010 | kW | Type d'entrée d'énergie | Électrique | | |
| Mode chauffage du carter | $P_{CK}$ | 0.000 | kW | | | | |

| **Autre articles** | | | | | | | |
|---|---|---|---|---|---|---|---|
| Contrôle de la capacité | variables | | | Pour les pompes à chaleur air-eau : Débit d'air nominal, à l'extérieur | - | 5000 | $m^3/h$ |
| Niveau de puissance sonore, intérieur/extérieur | $L_{WA}$ | -/64 | dB | Pour les pompes à chaleur eau-eau ou eau saumure-eau : Débit d'eau ou de fluide caloporteur nominal, échangeur de chaleur extérieur | - | N/A | $m^3/h$ |
| Consommation annuelle d'énergie | $Q_{HE}$ | 8470 | kWh | | | | |
| Pour un chauffe-eau combiné avec pompe à chaleur : | | | | | | | |
| **Profil de charge déclaré** | N/A | | | **Efficacité énergétique pour le chauffage de l'eau** | $\eta_{wh}$ | N/A | % |
| Consommation quotidienne d'électricité | $Q_{elec}$ | N/A | kWh | Consommation quotidienne de combustible | $Q_{fuel}$ | N/A | kWh |
| Consommation annuelle d'électricité | AEC | N/A | kWh | Consommation annuelle de combustible | AFC | N/A | GJ |
| Détails de contact | Consultez la couverture arrière du manuel. | | | | | | |

(*) Pour les chauffe-eau thermodynamiques et les chauffe-eau combinés thermodynamiques, la puissance thermique nominale est égale à la charge de conception pour le chauffage, et la puissance thermique nominale d'un chauffage d'appoint est égale à la capacité d'appoint pour le chauffage sup(Tj). (**) Si Cdh n'est pas déterminé par mesure, alors le coefficient de dégradation par défaut est Cdh = 0,9.

# Paramètres techniques

| | |
|---|---|
| Modèle(s): | 14 kW(chauffage 3kW);14kW |
| Pompe à chaleur air-eau | oui |
| Pompe à chaleur eau-eau | non |
| Pompe à chaleur eau glycolée-eau | non |
| Pompe à chaleur basse température | non |
| Équipée d'une résistance de chauffage supplémentaire | non(pour 14 kW(chauffage 3kW)) oui(pour 14 kW) |
| Chauffe-eau combiné avec pompe à chaleur | non |
| Conditions climatiques déclarées ; | Moyen |

Les paramètres sont déclarés pour une application basse température;

| Article | Symbol | Valeur | Unité | Article | Symbol | Valeur | Unité |
|---|---|---|---|---|---|---|---|
| **Puissance thermique nominale(*)** | Puissance nominale | 14 | kW | **Efficacité énergétique saisonnière du chauffage de l'espace** | $\eta_s$ | 182 | % |
| Capacité déclarée pour le chauffage en charge partielle à une température intérieure de 20 °C et une température extérieure de Tj | | | | Capacité déclarée de chauffage pour une charge partielle à une température intérieure de 20°C et une température extérieure de Tj | | | |
| $T_j$ = – 7°C | Puissance nominale | 12.4 | kW | $T_j$ = – 7°C | $COP_d$ | 2.80 | - |
| $T_j$ = + 2°C | $P_{dh}$ | 7.5 | kW | $T_j$ = + 2°C | $COP_d$ | 4.38 | - |
| $T_j$ = + 7°C | $P_{dh}$ | 5.2 | kW | $T_j$ = + 7°C | $COP_d$ | 6.53 | - |
| $T_j$ = + 12°C | $P_{dh}$ | 4.5 | kW | $T_j$ = + 12°C | $COP_d$ | 8.58 | - |
| $T_j$ = température bivalente | $P_{dh}$ | 12.4 | kW | $T_j$ = température bivalente | $COP_d$ | 2.80 | - |
| $T_j$ = température limite d'exploitation | $P_{dh}$ | 12.8 | kW | $T_j$ = température limite d'exploitation | $COP_d$ | 2.51 | - |
| Pour les pompes à chaleur air-eau : Tj = -15°C (si TOL < -20°C) | $P_{dh}$ | N/A | kW | Pour les pompes à chaleur air-eau : Tj = -15°C (si TOL < -20°C) | $COP_d$ | N/A | - |
| Température bivalente | $T_{biv}$ | -7 | °C | Pour les pompes à chaleur air-eau : température limite d'exploitation | TOL | -10 | °C |
| Capacité de cycle pour le chauffage | $P_{cych}$ | N/A | kW | Efficacité de l'intervalle de cycle | $COP_{cyc}$ | N/A | - |
| Coefficient de dégradation (**) | $C_{dh}$ | 0.9 | kW | Température limite de fonctionnement de l'eau de chauffage | WTOL | 65 | °C |
| Consommation électrique en dehors du mode actif | | | | Chauffage d'appoint | | | |
| Mode hors tension | $P_{OFF}$ | 0.010 | kW | | | | |
| Mode thermostat éteint | $P_{TO}$ | 0.010 | kW | Puissance thermique nominale (**) | $p_{sup}$ | 1.2 | KW |
| Mode veille | $P_{SB}$ | 0.010 | kW | Type d'entrée d'énergie | Électrique | | |
| Mode chauffage du carter | $P_{CK}$ | 0.000 | kW | | | | |

| **Autre articles** | | | | | | | |
|---|---|---|---|---|---|---|---|
| Contrôle de la capacité | variables | | | Pour les pompes à chaleur air-eau : Débit d'air nominal, à l'extérieur | - | 5500 | $m^3/h$ |
| Niveau de puissance sonore, intérieur/extérieur | $L_{WA}$ | -/66 | dB | Pour les pompes à chaleur eau-eau ou eau saumure-eau : Débit d'eau ou de fluide caloporteur nominal, échangeur de chaleur extérieur | - | N/A | $m^3/h$ |
| Consommation annuelle d'énergie | $Q_{HE}$ | 6238 | kWh | | | | |
| Pour un chauffe-eau combiné avec pompe à chaleur : | | | | | | | |
| **Profil de charge déclaré** | N/A | | | **Efficacité énergétique pour le chauffage de l'eau** | $\eta_{wh}$ | N/A | % |
| Consommation quotidienne d'électricité | $Q_{elec}$ | N/A | kWh | Consommation quotidienne de combustible | $Q_{fuel}$ | N/A | kWh |
| Consommation annuelle d'électricité | AEC | N/A | kWh | Consommation annuelle de combustible | AFC | N/A | GJ |
| Détails de contact | Consultez la couverture arrière du manuel. | | | | | | |

(*) Pour les chauffe-eau thermodynamiques et les chauffe-eau combinés thermodynamiques, la puissance thermique nominale est égale à la charge de conception pour le chauffage, et la puissance thermique nominale d'un chauffage d'appoint est égale à la capacité d'appoint pour le chauffage sup(Tj). (**) Si Cdh n'est pas déterminé par mesure, alors le coefficient de dégradation par défaut est Cdh = 0,9.

# Paramètres techniques

| | |
|---|---|
| Modèle(s): | 14 kW(chauffage 3kW);14kW |
| Pompe à chaleur air-eau | oui |
| Pompe à chaleur eau-eau | non |
| Pompe à chaleur eau glycolée-eau | non |
| Pompe à chaleur basse température | non |
| Équipée d'une résistance de chauffage supplémentaire | non(pour 14 kW(chauffage 3kW)) oui(pour 14 kW) |
| Chauffe-eau combiné avec pompe à chaleur | non |
| Conditions climatiques déclarées ; | plus chaud |

Les paramètres sont déclarés pour une application basse température;

| Article | Symbol | Valeur | Unité | Article | Symbol | Valeur | Unité |
|---|---|---|---|---|---|---|---|
| **Puissance thermique nominale(*)** | Puissance nominale | 12 | kW | **Efficacité énergétique saisonnière du chauffage de l'espace** | $\eta_s$ | 248 | % |
| Capacité déclarée pour le chauffage en charge partielle à une température intérieure de 20 °C et une température extérieure de Tj | | | | Capacité déclarée de chauffage pour une charge partielle à une température intérieure de 20°C et une température extérieure de Tj | | | |
| $T_j$ = – 7°C | Puissance nominale | N/A | kW | $T_j$ = – 7°C | $COP_d$ | N/A | - |
| $T_j$ = + 2°C | $P_{dh}$ | 12.3 | kW | $T_j$ = + 2°C | $COP_d$ | 3.40 | - |
| $T_j$ = + 7°C | $P_{dh}$ | 8.0 | kW | $T_j$ = + 7°C | $COP_d$ | 5.60 | - |
| $T_j$ = + 12°C | $P_{dh}$ | 4.2 | kW | $T_j$ = + 12°C | $COP_d$ | 7.94 | - |
| $T_j$ = température bivalente | $P_{dh}$ | 8.0 | kW | $T_j$ = température bivalente | $COP_d$ | 5.60 | - |
| $T_j$ = température limite d'exploitation | $P_{dh}$ | 12.3 | kW | $T_j$ = température limite d'exploitation | $COP_d$ | 3.40 | - |
| Pour les pompes à chaleur air-eau : Tj = -15°C (si TOL < -20°C) | $P_{dh}$ | N/A | kW | Pour les pompes à chaleur air-eau : Tj = -15°C (si TOL < -20°C) | $COP_d$ | N/A | - |
| Température bivalente | $T_{biv}$ | 7 | °C | Pour les pompes à chaleur air-eau : température limite d'exploitation | TOL | 2 | °C |
| Capacité de cycle pour le chauffage | $P_{cych}$ | N/A | kW | Efficacité de l'intervalle de cycle | $COP_{cyc}$ | N/A | - |
| Coefficient de dégradation (**) | $C_{dh}$ | 0.9 | kW | Température limite de fonctionnement de l'eau de chauffage | WTOL | 65 | °C |
| Consommation électrique en dehors du mode actif | | | | Chauffage d'appoint | | | |
| Mode hors tension | $P_{OFF}$ | 0.010 | kW | | | | |
| Mode thermostat éteint | $P_{TO}$ | 0.010 | kW | Puissance thermique nominale (**) | $p_{sup}$ | 0.0 | KW |
| Mode veille | $P_{SB}$ | 0.010 | kW | Type d'entrée d'énergie | Électrique | | |
| Mode chauffage du carter | $P_{CK}$ | 0.000 | kW | | | | |

| **Autre articles** | | | | | | | |
|---|---|---|---|---|---|---|---|
| Contrôle de la capacité | variables | | | Pour les pompes à chaleur air-eau : Débit d'air nominal, à l'extérieur | - | 5500 | $m^3/h$ |
| Niveau de puissance sonore, intérieur/extérieur | $L_{WA}$ | -/66 | dB | Pour les pompes à chaleur eau-eau ou eau saumure-eau : Débit d'eau ou de fluide caloporteur nominal, échangeur de chaleur extérieur | - | N/A | $m^3/h$ |
| Consommation annuelle d'énergie | $Q_{HE}$ | 2638 | kWh | | | | |
| Pour un chauffe-eau combiné avec pompe à chaleur : | | | | | | | |
| **Profil de charge déclaré** | N/A | | | **Efficacité énergétique pour le chauffage de l'eau** | $\eta_{wh}$ | N/A | % |
| Consommation quotidienne d'électricité | $Q_{elec}$ | N/A | kWh | Consommation quotidienne de combustible | $Q_{fuel}$ | N/A | kWh |
| Consommation annuelle d'électricité | AEC | N/A | kWh | Consommation annuelle de combustible | AFC | N/A | GJ |
| Détails de contact | Consultez la couverture arrière du manuel. | | | | | | |

(*) Pour les chauffe-eau thermodynamiques et les chauffe-eau combinés thermodynamiques, la puissance thermique nominale est égale à la charge de conception pour le chauffage, et la puissance thermique nominale d'un chauffage d'appoint est égale à la capacité d'appoint pour le chauffage sup(Tj). (**) Si Cdh n'est pas déterminé par mesure, alors le coefficient de dégradation par défaut est Cdh = 0,9.

# Paramètres techniques

| | |
|---|---|
| Modèle(s): | 14 kW(chauffage 3kW);14 kW |
| Pompe à chaleur air-eau | oui |
| Pompe à chaleur eau-eau | non |
| Pompe à chaleur eau glycolée-eau | non |
| Pompe à chaleur basse température | non |
| Équipée d'une résistance de chauffage supplémentaire | non(pour 14 kW(chauffage 3kW)) oui(pour 14 kW) |
| Chauffe-eau combiné avec pompe à chaleur | non |
| Conditions climatiques déclarées ; | plus froid |

Les paramètres sont déclarés pour une application basse température;

| Article | Symbol | Valeur | Unité | Article | Symbol | Valeur | Unité |
|---|---|---|---|---|---|---|---|
| **Puissance thermique nominale(*)** | Puissance nominale | 13 | kW | **Efficacité énergétique saisonnière du chauffage de l'espace** | $\eta_s$ | 156 | % |
| Capacité déclarée pour le chauffage en charge partielle à une température intérieure de 20 °C et une température extérieure de Tj | | | | Capacité déclarée de chauffage pour une charge partielle à une température intérieure de 20°C et une température extérieure de Tj | | | |
| $T_j$ = – 7°C | Puissance nominale | 8.2 | kW | $T_j$ = – 7°C | $COP_d$ | 3.35 | - |
| $T_j$ = + 2°C | $P_{dh}$ | 4.6 | kW | $T_j$ = + 2°C | $COP_d$ | 4.72 | - |
| $T_j$ = + 7°C | $P_{dh}$ | 3.4 | kW | $T_j$ = + 7°C | $COP_d$ | 6.10 | - |
| $T_j$ = + 12°C | $P_{dh}$ | 3.8 | kW | $T_j$ = + 12°C | $COP_d$ | 8.00 | - |
| $T_j$ = température bivalente | $P_{dh}$ | 10.6 | kW | $T_j$ = température bivalente | $COP_d$ | 2.55 | - |
| $T_j$ = température limite d'exploitation | $P_{dh}$ | 7.9 | kW | $T_j$ = température limite d'exploitation | $COP_d$ | 2.10 | - |
| Pour les pompes à chaleur air-eau : Tj = -15°C (si TOL < -20°C) | $P_{dh}$ | N/A | kW | Pour les pompes à chaleur air-eau : Tj = -15°C (si TOL < -20°C) | $COP_d$ | N/A | - |
| Température bivalente | $T_{biv}$ | -15 | °C | Pour les pompes à chaleur air-eau : température limite d'exploitation | TOL | -22 | °C |
| Capacité de cycle pour le chauffage | $P_{cych}$ | N/A | kW | Efficacité de l'intervalle de cycle | $COP_{cyc}$ | N/A | - |
| Coefficient de dégradation (**) | $C_{dh}$ | 0.9 | kW | Température limite de fonctionnement de l'eau de chauffage | WTOL | 65 | °C |
| Consommation électrique en dehors du mode actif | | | | Chauffage d'appoint | | | |
| Mode hors tension | $P_{OFF}$ | 0.010 | kW | | | | |
| Mode thermostat éteint | $P_{TO}$ | 0.010 | kW | Puissance thermique nominale (**) | $p_{sup}$ | 5.1 | KW |
| Mode veille | $P_{SB}$ | 0.010 | kW | Type d'entrée d'énergie | Électrique | | |
| Mode chauffage du carter | $P_{CK}$ | 0.000 | kW | | | | |

| **Autre articles** | | | | | | | |
|---|---|---|---|---|---|---|---|
| Contrôle de la capacité | variables | | | Pour les pompes à chaleur air-eau : Débit d'air nominal, à l'extérieur | - | 5500 | $m^3/h$ |
| Niveau de puissance sonore, intérieur/extérieur | $L_{WA}$ | -/66 | dB | Pour les pompes à chaleur eau-eau ou eau saumure-eau : Débit d'eau ou de fluide caloporteur nominal, échangeur de chaleur extérieur | - | N/A | $m^3/h$ |
| Consommation annuelle d'énergie | $Q_{HE}$ | 8111 | kWh | | | | |
| Pour un chauffe-eau combiné avec pompe à chaleur : | | | | | | | |
| **Profil de charge déclaré** | N/A | | | **Efficacité énergétique pour le chauffage de l'eau** | $\eta_{wh}$ | N/A | % |
| Consommation quotidienne d'électricité | $Q_{elec}$ | N/A | kWh | Consommation quotidienne de combustible | $Q_{fuel}$ | N/A | kWh |
| Consommation annuelle d'électricité | AEC | N/A | kWh | Consommation annuelle de combustible | AFC | N/A | GJ |
| Détails de contact | Consultez la couverture arrière du manuel. | | | | | | |

(*) Pour les chauffe-eau thermodynamiques et les chauffe-eau combinés thermodynamiques, la puissance thermique nominale est égale à la charge de conception pour le chauffage, et la puissance thermique nominale d'un chauffage d'appoint est égale à la capacité d'appoint pour le chauffage sup(Tj). (**) Si Cdh n'est pas déterminé par mesure, alors le coefficient de dégradation par défaut est Cdh = 0,9.

# Paramètres techniques

| | |
|---|---|
| Modèle(s): | 14 kW(chauffage 3kW);14kW |
| Pompe à chaleur air-eau | oui |
| Pompe à chaleur eau-eau | non |
| Pompe à chaleur eau glycolée-eau | non |
| Pompe à chaleur basse température | non |
| Équipée d'une résistance de chauffage supplémentaire | non(pour 12 kW(chauffage 3kW)) oui(pour 12 kW) |
| Chauffe-eau combiné avec pompe à chaleur | non |
| Conditions climatiques déclarées ; | Moyen |

Les paramètres sont déclarés pour une application moyenne température.

| Article | Symbol | Valeur | Unité | Article | Symbol | Valeur | Unité |
|---|---|---|---|---|---|---|---|
| **Puissance thermique nominale(*)** | Puissance nominale | 12 | kW | **Efficacité énergétique saisonnière du chauffage de l'espace** | $\eta_s$ | 134 | % |
| Capacité déclarée pour le chauffage en charge partielle à une température intérieure de 20 °C et une température extérieure de Tj | | | | Capacité déclarée de chauffage pour une charge partielle à une température intérieure de 20°C et une température extérieure de Tj | | | |
| $T_j$ = – 7°C | Puissance nominale | 10.9 | kW | $T_j$ = – 7°C | $COP_d$ | 1.99 | - |
| $T_j$ = + 2°C | $P_{dh}$ | 6.9 | kW | $T_j$ = + 2°C | $COP_d$ | 3.26 | - |
| $T_j$ = + 7°C | $P_{dh}$ | 4.5 | kW | $T_j$ = + 7°C | $COP_d$ | 4.79 | - |
| $T_j$ = + 12°C | $P_{dh}$ | 4.0 | kW | $T_j$ = + 12°C | $COP_d$ | 7.25 | - |
| $T_j$ = température bivalente | $P_{dh}$ | 10.9 | kW | $T_j$ = température bivalente | $COP_d$ | 1.99 | - |
| $T_j$ = température limite d'exploitation | $P_{dh}$ | 10.3 | kW | $T_j$ = température limite d'exploitation | $COP_d$ | 1.81 | - |
| Pour les pompes à chaleur air-eau : Tj = -15°C (si TOL < -20°C) | $P_{dh}$ | N/A | kW | Pour les pompes à chaleur air-eau : Tj = -15°C (si TOL < -20°C) | $COP_d$ | N/A | - |
| Température bivalente | $T_{biv}$ | -7 | °C | Pour les pompes à chaleur air-eau : température limite d'exploitation | TOL | -10 | °C |
| Capacité de cycle pour le chauffage | $P_{cych}$ | N/A | kW | Efficacité de l'intervalle de cycle | $COP_{cyc}$ | N/A | - |
| Coefficient de dégradation (**) | $C_{dh}$ | 0.9 | kW | Température limite de fonctionnement de l'eau de chauffage | WTOL | 65 | °C |
| Consommation électrique en dehors du mode actif | | | | Chauffage d'appoint | | | |
| Mode hors tension | $P_{OFF}$ | 0.010 | kW | | | | |
| Mode thermostat éteint | $P_{TO}$ | 0.010 | kW | Puissance thermique nominale (**) | $p_{sup}$ | 1.7 | KW |
| Mode veille | $P_{SB}$ | 0.010 | kW | Type d'entrée d'énergie | Électrique | | |
| Mode chauffage du carter | $P_{CK}$ | 0.000 | kW | | | | |

| **Autre articles** | | | | | | | |
|---|---|---|---|---|---|---|---|
| Contrôle de la capacité | variables | | | Pour les pompes à chaleur air-eau : Débit d'air nominal, à l'extérieur | - | 5500 | $m^3/h$ |
| Niveau de puissance sonore, intérieur/extérieur | $L_{WA}$ | -/66 | dB | Pour les pompes à chaleur eau-eau ou eau saumure-eau : Débit d'eau ou de fluide caloporteur nominal, échangeur de chaleur extérieur | - | N/A | $m^3/h$ |
| Consommation annuelle d'énergie | $Q_{HE}$ | 7427 | kWh | | | | |
| Pour un chauffe-eau combiné avec pompe à chaleur : | | | | | | | |
| **Profil de charge déclaré** | N/A | | | **Efficacité énergétique pour le chauffage de l'eau** | $\eta_{wh}$ | N/A | % |
| Consommation quotidienne d'électricité | $Q_{elec}$ | N/A | kWh | Consommation quotidienne de combustible | $Q_{fuel}$ | N/A | kWh |
| Consommation annuelle d'électricité | AEC | N/A | kWh | Consommation annuelle de combustible | AFC | N/A | GJ |
| Détails de contact | Consultez la couverture arrière du manuel. | | | | | | |

(*) Pour les chauffe-eau thermodynamiques et les chauffe-eau combinés thermodynamiques, la puissance thermique nominale est égale à la charge de conception pour le chauffage, et la puissance thermique nominale d'un chauffage d'appoint est égale à la capacité d'appoint pour le chauffage sup(Tj). (**) Si Cdh n'est pas déterminé par mesure, alors le coefficient de dégradation par défaut est Cdh = 0,9.

# Paramètres techniques

| | |
|---|---|
| Modèle(s): | 14 kW(chauffage 3kW);14kW |
| Pompe à chaleur air-eau | oui |
| Pompe à chaleur eau-eau | non |
| Pompe à chaleur eau glycolée-eau | non |
| Pompe à chaleur basse température | non |
| Équipée d'une résistance de chauffage supplémentaire | non(pour 14 kW(chauffage 3kW)) oui(pour 14 kW) |
| Chauffe-eau combiné avec pompe à chaleur | non |
| Conditions climatiques déclarées ; | plus chaud |

Les paramètres sont déclarés pour une application moyenne température.

| Article | Symbol | Valeur | Unité | Article | Symbol | Valeur | Unité |
|---|---|---|---|---|---|---|---|
| **Puissance thermique nominale(*)** | Puissance nominale | 14 | kW | **Efficacité énergétique saisonnière du chauffage de l'espace** | $\eta_s$ | 170 | % |
| Capacité déclarée pour le chauffage en charge partielle à une température intérieure de 20 °C et une température extérieure de Tj | | | | Capacité déclarée de chauffage pour une charge partielle à une température intérieure de 20°C et une température extérieure de Tj | | | |
| $T_j$ = – 7°C | Puissance nominale | N/A | kW | $T_j$ = – 7°C | $COP_d$ | N/A | - |
| $T_j$ = + 2°C | $P_{dh}$ | 13.1 | kW | $T_j$ = + 2°C | $COP_d$ | 2.25 | - |
| $T_j$ = + 7°C | $P_{dh}$ | 9.0 | kW | $T_j$ = + 7°C | $COP_d$ | 3.61 | - |
| $T_j$ = + 12°C | $P_{dh}$ | 4.1 | kW | $T_j$ = + 12°C | $COP_d$ | 5.94 | - |
| $T_j$ = température bivalente | $P_{dh}$ | 9.0 | kW | $T_j$ = température bivalente | $COP_d$ | 3.61 | - |
| $T_j$ = température limite d'exploitation | $P_{dh}$ | 13.1 | kW | $T_j$ = température limite d'exploitation | $COP_d$ | 2.25 | - |
| Pour les pompes à chaleur air-eau : Tj = -15°C (si TOL < -20°C) | $P_{dh}$ | N/A | kW | Pour les pompes à chaleur air-eau : Tj = -15°C (si TOL < -20°C) | $COP_d$ | N/A | - |
| Température bivalente | $T_{biv}$ | 7 | °C | Pour les pompes à chaleur air-eau : température limite d'exploitation | TOL | 2 | °C |
| Capacité de cycle pour le chauffage | $P_{cych}$ | N/A | kW | Efficacité de l'intervalle de cycle | $COP_{cyc}$ | N/A | - |
| Coefficient de dégradation (**) | $C_{dh}$ | 0.9 | kW | Température limite de fonctionnement de l'eau de chauffage | WTOL | 65 | °C |
| Consommation électrique en dehors du mode actif | | | | Chauffage d'appoint | | | |
| Mode hors tension | $P_{OFF}$ | 0.010 | kW | | | | |
| Mode thermostat éteint | $P_{TO}$ | 0.010 | kW | Puissance thermique nominale (**) | $p_{sup}$ | 0.9 | KW |
| Mode veille | $P_{SB}$ | 0.010 | kW | Type d'entrée d'énergie | Électrique | | |
| Mode chauffage du carter | $P_{CK}$ | 0.000 | kW | | | | |

| **Autre articles** | | | | | | | |
|---|---|---|---|---|---|---|---|
| Contrôle de la capacité | variables | | | Pour les pompes à chaleur air-eau : Débit d'air nominal, à l'extérieur | - | 5500 | $m^3/h$ |
| Niveau de puissance sonore, intérieur/extérieur | $L_{WA}$ | -/66 | dB | Pour les pompes à chaleur eau-eau ou eau saumure-eau : Débit d'eau ou de fluide caloporteur nominal, échangeur de chaleur extérieur | - | N/A | $m^3/h$ |
| Consommation annuelle d'énergie | $Q_{HE}$ | 4323 | kWh | | | | |
| Pour un chauffe-eau combiné avec pompe à chaleur : | | | | | | | |
| **Profil de charge déclaré** | N/A | | | **Efficacité énergétique pour le chauffage de l'eau** | $\eta_{wh}$ | N/A | % |
| Consommation quotidienne d'électricité | $Q_{elec}$ | N/A | kWh | Consommation quotidienne de combustible | $Q_{fuel}$ | N/A | kWh |
| Consommation annuelle d'électricité | AEC | N/A | kWh | Consommation annuelle de combustible | AFC | N/A | GJ |
| Détails de contact | Consultez la couverture arrière du manuel. | | | | | | |

(*) Pour les chauffe-eau thermodynamiques et les chauffe-eau combinés thermodynamiques, la puissance thermique nominale est égale à la charge de conception pour le chauffage, et la puissance thermique nominale d'un chauffage d'appoint est égale à la capacité d'appoint pour le chauffage sup(Tj). (**) Si Cdh n'est pas déterminé par mesure, alors le coefficient de dégradation par défaut est Cdh = 0,9.

# Paramètres techniques

| | |
|---|---|
| Modèle(s): | 14 kW(chauffage 3kW);14kW |
| Pompe à chaleur air-eau | oui |
| Pompe à chaleur eau-eau | non |
| Pompe à chaleur eau glycolée-eau | non |
| Pompe à chaleur basse température | non |
| Équipée d'une résistance de chauffage supplémentaire | non(pour 12 kW(chauffage 3kW)) oui(pour 12 kW) |
| Chauffe-eau combiné avec pompe à chaleur | non |
| Conditions climatiques déclarées ; | plus froid |

Les paramètres sont déclarés pour une application moyenne température.

| Article | Symbol | Valeur | Unité | Article | Symbol | Valeur | Unité |
|---|---|---|---|---|---|---|---|
| **Puissance thermique nominale(*)** | Puissance nominale | 11 | kW | **Efficacité énergétique saisonnière du chauffage de l'espace** | $\eta_s$ | 117 | % |
| Capacité déclarée pour le chauffage en charge partielle à une température intérieure de 20 °C et une température extérieure de Tj | | | | Capacité déclarée de chauffage pour une charge partielle à une température intérieure de 20°C et une température extérieure de Tj | | | |
| $T_j$ = – 7°C | Puissance nominale | 7.2 | kW | $T_j$ = – 7°C | $COP_d$ | 2.58 | - |
| $T_j$ = + 2°C | $P_{dh}$ | 4.2 | kW | $T_j$ = + 2°C | $COP_d$ | 3.62 | - |
| $T_j$ = + 7°C | $P_{dh}$ | 3.1 | kW | $T_j$ = + 7°C | $COP_d$ | 4.77 | - |
| $T_j$ = + 12°C | $P_{dh}$ | 3.6 | kW | $T_j$ = + 12°C | $COP_d$ | 6.40 | - |
| $T_j$ = température bivalente | $P_{dh}$ | 8.9 | kW | $T_j$ = température bivalente | $COP_d$ | 1.82 | - |
| $T_j$ = température limite d'exploitation | $P_{dh}$ | 4.4 | kW | $T_j$ = température limite d'exploitation | $COP_d$ | 1.16 | - |
| Pour les pompes à chaleur air-eau : Tj = -15°C (si TOL < -20°C) | $P_{dh}$ | N/A | kW | Pour les pompes à chaleur air-eau : Tj = -15°C (si TOL < -20°C) | $COP_d$ | N/A | - |
| Température bivalente | $T_{biv}$ | -15 | °C | Pour les pompes à chaleur air-eau : température limite d'exploitation | TOL | -22 | °C |
| Capacité de cycle pour le chauffage | $P_{cych}$ | N/A | kW | Efficacité de l'intervalle de cycle | $COP_{cyc}$ | N/A | - |
| Coefficient de dégradation (**) | $C_{dh}$ | 0.9 | kW | Température limite de fonctionnement de l'eau de chauffage | WTOL | 65 | °C |
| Consommation électrique en dehors du mode actif | | | | Chauffage d'appoint | | | |
| Mode hors tension | $P_{OFF}$ | 0.010 | kW | | | | |
| Mode thermostat éteint | $P_{TO}$ | 0.010 | kW | Puissance thermique nominale (**) | $p_{sup}$ | 6.6 | KW |
| Mode veille | $P_{SB}$ | 0.010 | kW | Type d'entrée d'énergie | Électrique | | |
| Mode chauffage du carter | $P_{CK}$ | 0.000 | kW | | | | |

| **Autre articles** | | | | | | | |
|---|---|---|---|---|---|---|---|
| Contrôle de la capacité | variables | | | Pour les pompes à chaleur air-eau : Débit d'air nominal, à l'extérieur | - | 5500 | $m^3/h$ |
| Niveau de puissance sonore, intérieur/extérieur | $L_{WA}$ | -/66 | dB | Pour les pompes à chaleur eau-eau ou eau saumure-eau : Débit d'eau ou de fluide caloporteur nominal, échangeur de chaleur extérieur | - | N/A | $m^3/h$ |
| Consommation annuelle d'énergie | $Q_{HE}$ | 8975 | kWh | | | | |
| Pour un chauffe-eau combiné avec pompe à chaleur : | | | | | | | |
| **Profil de charge déclaré** | N/A | | | **Efficacité énergétique pour le chauffage de l'eau** | $\eta_{wh}$ | N/A | % |
| Consommation quotidienne d'électricité | $Q_{elec}$ | N/A | kWh | Consommation quotidienne de combustible | $Q_{fuel}$ | N/A | kWh |
| Consommation annuelle d'électricité | AEC | N/A | kWh | Consommation annuelle de combustible | AFC | N/A | GJ |
| Détails de contact | Consultez la couverture arrière du manuel. | | | | | | |

(*) Pour les chauffe-eau thermodynamiques et les chauffe-eau combinés thermodynamiques, la puissance thermique nominale est égale à la charge de conception pour le chauffage, et la puissance thermique nominale d'un chauffage d'appoint est égale à la capacité d'appoint pour le chauffage sup(Tj). (**) Si Cdh n'est pas déterminé par mesure, alors le coefficient de dégradation par défaut est Cdh = 0,9.

# Paramètres techniques

| | |
|---|---|
| Modèle(s): | 16 kW(chauffage 3kW);16kW |
| Pompe à chaleur air-eau | oui |
| Pompe à chaleur eau-eau | non |
| Pompe à chaleur eau glycolée-eau | non |
| Pompe à chaleur basse température | non |
| Équipée d'une résistance de chauffage supplémentaire | non(pour 16 kW(chauffage 3kW)) oui(pour 16 kW) |
| Chauffe-eau combiné avec pompe à chaleur | non |
| Conditions climatiques déclarées ; | Moyen |

Les paramètres sont déclarés pour une application basse température;

| Article | Symbol | Valeur | Unité | Article | Symbol | Valeur | Unité |
|---|---|---|---|---|---|---|---|
| **Puissance thermique nominale(*)** | Puissance nominale | 15 | kW | **Efficacité énergétique saisonnière du chauffage de l'espace** | $\eta_s$ | 179 | % |
| Capacité déclarée pour le chauffage en charge partielle à une température intérieure de 20 °C et une température extérieure de Tj | | | | Capacité déclarée de chauffage pour une charge partielle à une température intérieure de 20°C et une température extérieure de Tj | | | |
| $T_j$ = – 7°C | Puissance nominale | 13.4 | kW | $T_j$ = – 7°C | $COP_d$ | 2.66 | - |
| $T_j$ = + 2°C | $P_{dh}$ | 8.0 | kW | $T_j$ = + 2°C | $COP_d$ | 4.33 | - |
| $T_j$ = + 7°C | $P_{dh}$ | 5.4 | kW | $T_j$ = + 7°C | $COP_d$ | 6.48 | - |
| $T_j$ = + 12°C | $P_{dh}$ | 4.6 | kW | $T_j$ = + 12°C | $COP_d$ | 8.96 | - |
| $T_j$ = température bivalente | $P_{dh}$ | 13.4 | kW | $T_j$ = température bivalente | $COP_d$ | 2.66 | - |
| $T_j$ = température limite d'exploitation | $P_{dh}$ | 13.4 | kW | $T_j$ = température limite d'exploitation | $COP_d$ | 2.46 | - |
| Pour les pompes à chaleur air-eau : Tj = -15°C (si TOL < -20°C) | $P_{dh}$ | N/A | kW | Pour les pompes à chaleur air-eau : Tj = -15°C (si TOL < -20°C) | $COP_d$ | N/A | - |
| Température bivalente | $T_{biv}$ | -7 | °C | Pour les pompes à chaleur air-eau : température limite d'exploitation | TOL | -10 | °C |
| Capacité de cycle pour le chauffage | $P_{cych}$ | N/A | kW | Efficacité de l'intervalle de cycle | $COP_{cyc}$ | N/A | - |
| Coefficient de dégradation (**) | $C_{dh}$ | 0.9 | kW | Température limite de fonctionnement de l'eau de chauffage | WTOL | 65 | °C |
| Consommation électrique en dehors du mode actif | | | | Chauffage d'appoint | | | |
| Mode hors tension | $P_{OFF}$ | 0.010 | kW | | | | |
| Mode thermostat éteint | $P_{TO}$ | 0.010 | kW | Puissance thermique nominale (**) | $p_{sup}$ | 1.6 | KW |
| Mode veille | $P_{SB}$ | 0.010 | kW | Type d'entrée d'énergie | Électrique | | |
| Mode chauffage du carter | $P_{CK}$ | 0.000 | kW | | | | |

| **Autre articles** | | | | | | | |
|---|---|---|---|---|---|---|---|
| Contrôle de la capacité | variables | | | Pour les pompes à chaleur air-eau : Débit d'air nominal, à l'extérieur | - | 6000 | $m^3/h$ |
| Niveau de puissance sonore, intérieur/extérieur | $L_{WA}$ | -/68 | dB | Pour les pompes à chaleur eau-eau ou eau saumure-eau : Débit d'eau ou de fluide caloporteur nominal, échangeur de chaleur extérieur | - | N/A | $m^3/h$ |
| Consommation annuelle d'énergie | $Q_{HE}$ | 6863 | kWh | | | | |
| Pour un chauffe-eau combiné avec pompe à chaleur : | | | | | | | |
| **Profil de charge déclaré** | N/A | | | **Efficacité énergétique pour le chauffage de l'eau** | $\eta_{wh}$ | N/A | % |
| Consommation quotidienne d'électricité | $Q_{elec}$ | N/A | kWh | Consommation quotidienne de combustible | $Q_{fuel}$ | N/A | kWh |
| Consommation annuelle d'électricité | AEC | N/A | kWh | Consommation annuelle de combustible | AFC | N/A | GJ |
| Détails de contact | Consultez la couverture arrière du manuel. | | | | | | |

(*) Pour les chauffe-eau thermodynamiques et les chauffe-eau combinés thermodynamiques, la puissance thermique nominale est égale à la charge de conception pour le chauffage, et la puissance thermique nominale d'un chauffage d'appoint est égale à la capacité d'appoint pour le chauffage sup(Tj). (**) Si Cdh n'est pas déterminé par mesure, alors le coefficient de dégradation par défaut est Cdh = 0,9.

# Paramètres techniques

| | |
|---|---|
| Modèle(s): | 16 kW(chauffage 3kW);16kW |
| Pompe à chaleur air-eau | oui |
| Pompe à chaleur eau-eau | non |
| Pompe à chaleur eau glycolée-eau | non |
| Pompe à chaleur basse température | non |
| Équipée d'une résistance de chauffage supplémentaire | non(pour 16 kW(chauffage 3kW)) oui(pour 16 kW) |
| Chauffe-eau combiné avec pompe à chaleur | non |
| Conditions climatiques déclarées ; | plus chaud |

Les paramètres sont déclarés pour une application basse température;

| Article | Symbol | Valeur | Unité | Article | Symbol | Valeur | Unité |
|---|---|---|---|---|---|---|---|
| **Puissance thermique nominale(*)** | Puissance nominale | 13 | kW | **Efficacité énergétique saisonnière du chauffage de l'espace** | $\eta_s$ | 239 | % |
| Capacité déclarée pour le chauffage en charge partielle à une température intérieure de 20 °C et une température extérieure de Tj | | | | Capacité déclarée de chauffage pour une charge partielle à une température intérieure de 20°C et une température extérieure de Tj | | | |
| $T_j$ = – 7°C | Puissance nominale | N/A | kW | $T_j$ = – 7°C | $COP_d$ | N/A | - |
| $T_j$ = + 2°C | $P_{dh}$ | 13.3 | kW | $T_j$ = + 2°C | $COP_d$ | 3.33 | - |
| $T_j$ = + 7°C | $P_{dh}$ | 8.5 | kW | $T_j$ = + 7°C | $COP_d$ | 5.19 | - |
| $T_j$ = + 12°C | $P_{dh}$ | 4.8 | kW | $T_j$ = + 12°C | $COP_d$ | 7.95 | - |
| $T_j$ = température bivalente | $P_{dh}$ | 8.5 | kW | $T_j$ = température bivalente | $COP_d$ | 5.19 | - |
| $T_j$ = température limite d'exploitation | $P_{dh}$ | 13.3 | kW | $T_j$ = température limite d'exploitation | $COP_d$ | 3.33 | - |
| Pour les pompes à chaleur air-eau : Tj = -15°C (si TOL < -20°C) | $P_{dh}$ | N/A | kW | Pour les pompes à chaleur air-eau : Tj = -15°C (si TOL < -20°C) | $COP_d$ | N/A | - |
| Température bivalente | $T_{biv}$ | 7 | °C | Pour les pompes à chaleur air-eau : température limite d'exploitation | TOL | 2 | °C |
| Capacité de cycle pour le chauffage | $P_{cych}$ | N/A | kW | Efficacité de l'intervalle de cycle | $COP_{cyc}$ | N/A | - |
| Coefficient de dégradation (**) | $C_{dh}$ | 0.9 | kW | Température limite de fonctionnement de l'eau de chauffage | WTOL | 65 | °C |
| Consommation électrique en dehors du mode actif | | | | Chauffage d'appoint | | | |
| Mode hors tension | $P_{OFF}$ | 0.010 | kW | | | | |
| Mode thermostat éteint | $P_{TO}$ | 0.010 | kW | Puissance thermique nominale (**) | $p_{sup}$ | 0.0 | KW |
| Mode veille | $P_{SB}$ | 0.010 | kW | Type d'entrée d'énergie | Électrique | | |
| Mode chauffage du carter | $P_{CK}$ | 0.000 | kW | | | | |

| **Autre articles** | | | | | | | |
|---|---|---|---|---|---|---|---|
| Contrôle de la capacité | variables | | | Pour les pompes à chaleur air-eau : Débit d'air nominal, à l'extérieur | - | 6000 | $m^3/h$ |
| Niveau de puissance sonore, intérieur/extérieur | $L_{WA}$ | -/68 | dB | Pour les pompes à chaleur eau-eau ou eau saumure-eau : Débit d'eau ou de fluide caloporteur nominal, échangeur de chaleur extérieur | - | N/A | $m^3/h$ |
| Consommation annuelle d'énergie | $Q_{HE}$ | 2934 | kWh | | | | |
| Pour un chauffe-eau combiné avec pompe à chaleur : | | | | | | | |
| **Profil de charge déclaré** | N/A | | | **Efficacité énergétique pour le chauffage de l'eau** | $\eta_{wh}$ | N/A | % |
| Consommation quotidienne d'électricité | $Q_{elec}$ | N/A | kWh | Consommation quotidienne de combustible | $Q_{fuel}$ | N/A | kWh |
| Consommation annuelle d'électricité | AEC | N/A | kWh | Consommation annuelle de combustible | AFC | N/A | GJ |
| Détails de contact | Consultez la couverture arrière du manuel. | | | | | | |

(*) Pour les chauffe-eau thermodynamiques et les chauffe-eau combinés thermodynamiques, la puissance thermique nominale est égale à la charge de conception pour le chauffage, et la puissance thermique nominale d'un chauffage d'appoint est égale à la capacité d'appoint pour le chauffage sup(Tj). (**) Si Cdh n'est pas déterminé par mesure, alors le coefficient de dégradation par défaut est Cdh = 0,9.

# Paramètres techniques

| | |
|---|---|
| Modèle(s): | 16 kW(chauffage 3kW);16kW |
| Pompe à chaleur air-eau | oui |
| Pompe à chaleur eau-eau | non |
| Pompe à chaleur eau glycolée-eau | non |
| Pompe à chaleur basse température | non |
| Équipée d'une résistance de chauffage supplémentaire | non(pour 16 kW(chauffage 3kW)) oui(pour 16 kW) |
| Chauffe-eau combiné avec pompe à chaleur | non |
| Conditions climatiques déclarées ; | plus froid |

Les paramètres sont déclarés pour une application basse température;

| Article | Symbol | Valeur | Unité | Article | Symbol | Valeur | Unité |
|---|---|---|---|---|---|---|---|
| **Puissance thermique nominale(*)** | Puissance nominale | 14 | kW | **Efficacité énergétique saisonnière du chauffage de l'espace** | $\eta_s$ | 156 | % |
| Capacité déclarée pour le chauffage en charge partielle à une température intérieure de 20 °C et une température extérieure de Tj | | | | Capacité déclarée de chauffage pour une charge partielle à une température intérieure de 20°C et une température extérieure de Tj | | | |
| $T_j$ = – 7°C | Puissance nominale | 9.1 | kW | $T_j$ = – 7°C | $COP_d$ | 3.30 | - |
| $T_j$ = + 2°C | $P_{dh}$ | 5.0 | kW | $T_j$ = + 2°C | $COP_d$ | 4.87 | - |
| $T_j$ = + 7°C | $P_{dh}$ | 4.2 | kW | $T_j$ = + 7°C | $COP_d$ | 6.50 | - |
| $T_j$ = + 12°C | $P_{dh}$ | 3.7 | kW | $T_j$ = + 12°C | $COP_d$ | 7.59 | - |
| $T_j$ = température bivalente | $P_{dh}$ | 11.3 | kW | $T_j$ = température bivalente | $COP_d$ | 2.28 | - |
| $T_j$ = température limite d'exploitation | $P_{dh}$ | 9.8 | kW | $T_j$ = température limite d'exploitation | $COP_d$ | 1.89 | - |
| Pour les pompes à chaleur air-eau : Tj = -15°C (si TOL < -20°C) | $P_{dh}$ | N/A | kW | Pour les pompes à chaleur air-eau : Tj = -15°C (si TOL < -20°C) | $COP_d$ | N/A | - |
| Température bivalente | $T_{biv}$ | -15 | °C | Pour les pompes à chaleur air-eau : température limite d'exploitation | TOL | -22 | °C |
| Capacité de cycle pour le chauffage | $P_{cych}$ | N/A | kW | Efficacité de l'intervalle de cycle | $COP_{cyc}$ | N/A | - |
| Coefficient de dégradation (**) | $C_{dh}$ | 0.9 | kW | Température limite de fonctionnement de l'eau de chauffage | WTOL | 65 | °C |
| Consommation électrique en dehors du mode actif | | | | Chauffage d'appoint | | | |
| Mode hors tension | $P_{OFF}$ | 0.010 | kW | | | | |
| Mode thermostat éteint | $P_{TO}$ | 0.010 | kW | Puissance thermique nominale (**) | $p_{sup}$ | 4.2 | KW |
| Mode veille | $P_{SB}$ | 0.010 | kW | Type d'entrée d'énergie | Électrique | | |
| Mode chauffage du carter | $P_{CK}$ | 0.000 | kW | | | | |

| **Autre articles** | | | | | | | |
|---|---|---|---|---|---|---|---|
| Contrôle de la capacité | variables | | | Pour les pompes à chaleur air-eau : Débit d'air nominal, à l'extérieur | - | 6000 | $m^3/h$ |
| Niveau de puissance sonore, intérieur/extérieur | $L_{WA}$ | -/68 | dB | Pour les pompes à chaleur eau-eau ou eau saumure-eau : Débit d'eau ou de fluide caloporteur nominal, échangeur de chaleur extérieur | - | N/A | $m^3/h$ |
| Consommation annuelle d'énergie | $Q_{HE}$ | 8618 | kWh | | | | |
| Pour un chauffe-eau combiné avec pompe à chaleur : | | | | | | | |
| **Profil de charge déclaré** | N/A | | | **Efficacité énergétique pour le chauffage de l'eau** | $\eta_{wh}$ | N/A | % |
| Consommation quotidienne d'électricité | $Q_{elec}$ | N/A | kWh | Consommation quotidienne de combustible | $Q_{fuel}$ | N/A | kWh |
| Consommation annuelle d'électricité | AEC | N/A | kWh | Consommation annuelle de combustible | AFC | N/A | GJ |
| Détails de contact | Consultez la couverture arrière du manuel. | | | | | | |

(*) Pour les chauffe-eau thermodynamiques et les chauffe-eau combinés thermodynamiques, la puissance thermique nominale est égale à la charge de conception pour le chauffage, et la puissance thermique nominale d'un chauffage d'appoint est égale à la capacité d'appoint pour le chauffage sup(Tj). (**) Si Cdh n'est pas déterminé par mesure, alors le coefficient de dégradation par défaut est Cdh = 0,9.

# Paramètres techniques

| | |
|---|---|
| Modèle(s): | 16 kW(chauffage 3kW);16kW |
| Pompe à chaleur air-eau | oui |
| Pompe à chaleur eau-eau | non |
| Pompe à chaleur eau glycolée-eau | non |
| Pompe à chaleur basse température | non |
| Équipée d'une résistance de chauffage supplémentaire | non(pour 16 kW(chauffage 3kW)) oui(pour 16 kW) |
| Chauffe-eau combiné avec pompe à chaleur | non |
| Conditions climatiques déclarées ; | Moyen |

Les paramètres sont déclarés pour une application moyenne température.

| Article | Symbol | Valeur | Unité | Article | Symbol | Valeur | Unité |
|---|---|---|---|---|---|---|---|
| **Puissance thermique nominale(*)** | Puissance nominale | 13 | kW | **Efficacité énergétique saisonnière du chauffage de l'espace** | $\eta_s$ | 136 | % |
| Capacité déclarée pour le chauffage en charge partielle à une température intérieure de 20 °C et une température extérieure de Tj | | | | Capacité déclarée de chauffage pour une charge partielle à une température intérieure de 20°C et une température extérieure de Tj | | | |
| $T_j$ = – 7°C | Puissance nominale | 11.3 | kW | $T_j$ = – 7°C | $COP_d$ | 2.04 | - |
| $T_j$ = + 2°C | $P_{dh}$ | 7.3 | kW | $T_j$ = + 2°C | $COP_d$ | 3.31 | - |
| $T_j$ = + 7°C | $P_{dh}$ | 4.8 | kW | $T_j$ = + 7°C | $COP_d$ | 4.81 | - |
| $T_j$ = + 12°C | $P_{dh}$ | 4.0 | kW | $T_j$ = + 12°C | $COP_d$ | 7.35 | - |
| $T_j$ = température bivalente | $P_{dh}$ | 11.3 | kW | $T_j$ = température bivalente | $COP_d$ | 2.04 | - |
| $T_j$ = température limite d'exploitation | $P_{dh}$ | 11.2 | kW | $T_j$ = température limite d'exploitation | $COP_d$ | 1.72 | - |
| Pour les pompes à chaleur air-eau : Tj = -15°C (si TOL < -20°C) | $P_{dh}$ | N/A | kW | Pour les pompes à chaleur air-eau : Tj = -15°C (si TOL < -20°C) | $COP_d$ | N/A | - |
| Température bivalente | $T_{biv}$ | -7 | °C | Pour les pompes à chaleur air-eau : température limite d'exploitation | TOL | -102 | °C |
| Capacité de cycle pour le chauffage | $P_{cych}$ | N/A | kW | Efficacité de l'intervalle de cycle | $COP_{cyc}$ | N/A | - |
| Coefficient de dégradation (**) | $C_{dh}$ | 0.9 | kW | Température limite de fonctionnement de l'eau de chauffage | WTOL | 65 | °C |
| Consommation électrique en dehors du mode actif | | | | Chauffage d'appoint | | | |
| Mode hors tension | $P_{OFF}$ | 0.010 | kW | | | | |
| Mode thermostat éteint | $P_{TO}$ | 0.010 | kW | Puissance thermique nominale (**) | $p_{sup}$ | 1.8 | KW |
| Mode veille | $P_{SB}$ | 0.010 | kW | Type d'entrée d'énergie | Électrique | | |
| Mode chauffage du carter | $P_{CK}$ | 0.000 | kW | | | | |

| **Autre articles** | | | | | | | |
|---|---|---|---|---|---|---|---|
| Contrôle de la capacité | variables | | | Pour les pompes à chaleur air-eau : Débit d'air nominal, à l'extérieur | - | 6000 | $m^3/h$ |
| Niveau de puissance sonore, intérieur/extérieur | $L_{WA}$ | -/68 | dB | Pour les pompes à chaleur eau-eau ou eau saumure-eau : Débit d'eau ou de fluide caloporteur nominal, échangeur de chaleur extérieur | - | N/A | $m^3/h$ |
| Consommation annuelle d'énergie | $Q_{HE}$ | 7593 | kWh | | | | |
| Pour un chauffe-eau combiné avec pompe à chaleur : | | | | | | | |
| **Profil de charge déclaré** | N/A | | | **Efficacité énergétique pour le chauffage de l'eau** | $\eta_{wh}$ | N/A | % |
| Consommation quotidienne d'électricité | $Q_{elec}$ | N/A | kWh | Consommation quotidienne de combustible | $Q_{fuel}$ | N/A | kWh |
| Consommation annuelle d'électricité | AEC | N/A | kWh | Consommation annuelle de combustible | AFC | N/A | GJ |
| Détails de contact | Consultez la couverture arrière du manuel. | | | | | | |

(*) Pour les chauffe-eau thermodynamiques et les chauffe-eau combinés thermodynamiques, la puissance thermique nominale est égale à la charge de conception pour le chauffage, et la puissance thermique nominale d'un chauffage d'appoint est égale à la capacité d'appoint pour le chauffage sup(Tj). (**) Si Cdh n'est pas déterminé par mesure, alors le coefficient de dégradation par défaut est Cdh = 0,9.

# Paramètres techniques

| | |
|---|---|
| Modèle(s): | 16 kW(chauffage 3kW);16kW |
| Pompe à chaleur air-eau | oui |
| Pompe à chaleur eau-eau | non |
| Pompe à chaleur eau glycolée-eau | non |
| Pompe à chaleur basse température | non |
| Équipée d'une résistance de chauffage supplémentaire | non(pour 16 kW(chauffage 3kW)) oui(pour 16 kW) |
| Chauffe-eau combiné avec pompe à chaleur | non |
| Conditions climatiques déclarées ; | plus chaud |

Les paramètres sont déclarés pour une application moyenne température.

| Article | Symbol | Valeur | Unité | Article | Symbol | Valeur | Unité |
|---|---|---|---|---|---|---|---|
| **Puissance thermique nominale(*)** | Puissance nominale | 14 | kW | **Efficacité énergétique saisonnière du chauffage de l'espace** | $\eta_s$ | 171 | % |
| Capacité déclarée pour le chauffage en charge partielle à une température intérieure de 20 °C et une température extérieure de Tj | | | | Capacité déclarée de chauffage pour une charge partielle à une température intérieure de 20°C et une température extérieure de Tj | | | |
| $T_j$ = – 7°C | Puissance nominale | N/A | kW | $T_j$ = – 7°C | $COP_d$ | N/A | - |
| $T_j$ = + 2°C | $P_{dh}$ | 13.2 | kW | $T_j$ = + 2°C | $COP_d$ | 2.30 | - |
| $T_j$ = + 7°C | $P_{dh}$ | 9.0 | kW | $T_j$ = + 7°C | $COP_d$ | 3.68 | - |
| $T_j$ = + 12°C | $P_{dh}$ | 4.1 | kW | $T_j$ = + 12°C | $COP_d$ | 5.80 | - |
| $T_j$ = température bivalente | $P_{dh}$ | 9.0 | kW | $T_j$ = température bivalente | $COP_d$ | 3.68 | - |
| $T_j$ = température limite d'exploitation | $P_{dh}$ | 13.2 | kW | $T_j$ = température limite d'exploitation | $COP_d$ | 2.30 | - |
| Pour les pompes à chaleur air-eau : Tj = -15°C (si TOL < -20°C) | $P_{dh}$ | N/A | kW | Pour les pompes à chaleur air-eau : Tj = -15°C (si TOL < -20°C) | $COP_d$ | N/A | - |
| Température bivalente | $T_{biv}$ | 7 | °C | Pour les pompes à chaleur air-eau : température limite d'exploitation | TOL | 2 | °C |
| Capacité de cycle pour le chauffage | $P_{cych}$ | N/A | kW | Efficacité de l'intervalle de cycle | $COP_{cyc}$ | N/A | - |
| Coefficient de dégradation (**) | $C_{dh}$ | 0.9 | kW | Température limite de fonctionnement de l'eau de chauffage | WTOL | 65 | °C |
| Consommation électrique en dehors du mode actif | | | | Chauffage d'appoint | | | |
| Mode hors tension | $P_{OFF}$ | 0.010 | kW | | | | |
| Mode thermostat éteint | $P_{TO}$ | 0.010 | kW | Puissance thermique nominale (**) | $p_{sup}$ | 0.8 | KW |
| Mode veille | $P_{SB}$ | 0.010 | kW | Type d'entrée d'énergie | Électrique | | |
| Mode chauffage du carter | $P_{CK}$ | 0.000 | kW | | | | |

| **Autre articles** | | | | | | | |
|---|---|---|---|---|---|---|---|
| Contrôle de la capacité | variables | | | Pour les pompes à chaleur air-eau : Débit d'air nominal, à l'extérieur | - | 6000 | $m^3/h$ |
| Niveau de puissance sonore, intérieur/extérieur | $L_{WA}$ | -/68 | dB | Pour les pompes à chaleur eau-eau ou eau saumure-eau : Débit d'eau ou de fluide caloporteur nominal, échangeur de chaleur extérieur | - | N/A | $m^3/h$ |
| Consommation annuelle d'énergie | $Q_{HE}$ | 4329 | kWh | | | | |
| Pour un chauffe-eau combiné avec pompe à chaleur : | | | | | | | |
| **Profil de charge déclaré** | N/A | | | **Efficacité énergétique pour le chauffage de l'eau** | $\eta_{wh}$ | N/A | % |
| Consommation quotidienne d'électricité | $Q_{elec}$ | N/A | kWh | Consommation quotidienne de combustible | $Q_{fuel}$ | N/A | kWh |
| Consommation annuelle d'électricité | AEC | N/A | kWh | Consommation annuelle de combustible | AFC | N/A | GJ |
| Détails de contact | Consultez la couverture arrière du manuel. | | | | | | |

(*) Pour les chauffe-eau thermodynamiques et les chauffe-eau combinés thermodynamiques, la puissance thermique nominale est égale à la charge de conception pour le chauffage, et la puissance thermique nominale d'un chauffage d'appoint est égale à la capacité d'appoint pour le chauffage sup(Tj). (**) Si Cdh n'est pas déterminé par mesure, alors le coefficient de dégradation par défaut est Cdh = 0,9.

# Paramètres techniques

| | |
|---|---|
| Modèle(s): | 16 kW(chauffage 3kW);16kW |
| Pompe à chaleur air-eau | oui |
| Pompe à chaleur eau-eau | non |
| Pompe à chaleur eau glycolée-eau | non |
| Pompe à chaleur basse température | non |
| Équipée d'une résistance de chauffage supplémentaire | non(pour 16 kW(chauffage 3kW)) oui(pour 16 kW) |
| Chauffe-eau combiné avec pompe à chaleur | non |
| Conditions climatiques déclarées ; | plus froid |

Les paramètres sont déclarés pour une application moyenne température.

| Article | Symbol | Valeur | Unité | Article | Symbol | Valeur | Unité |
|---|---|---|---|---|---|---|---|
| **Puissance thermique nominale(*)** | Puissance nominale | 12 | kW | **Efficacité énergétique saisonnière du chauffage de l'espace** | $\eta_s$ | 121 | % |
| Capacité déclarée pour le chauffage en charge partielle à une température intérieure de 20 °C et une température extérieure de Tj | | | | Capacité déclarée de chauffage pour une charge partielle à une température intérieure de 20°C et une température extérieure de Tj | | | |
| $T_j$ = – 7°C | Puissance nominale | 7.7 | kW | $T_j$ = – 7°C | $COP_d$ | 2.61 | - |
| $T_j$ = + 2°C | $P_{dh}$ | 4.5 | kW | $T_j$ = + 2°C | $COP_d$ | 3.78 | - |
| $T_j$ = + 7°C | $P_{dh}$ | 3.2 | kW | $T_j$ = + 7°C | $COP_d$ | 4.87 | - |
| $T_j$ = + 12°C | $P_{dh}$ | 3.6 | kW | $T_j$ = + 12°C | $COP_d$ | 6.39 | - |
| $T_j$ = température bivalente | $P_{dh}$ | 9.6 | kW | $T_j$ = température bivalente | $COP_d$ | 1.84 | - |
| $T_j$ = température limite d'exploitation | $P_{dh}$ | 5.1 | kW | $T_j$ = température limite d'exploitation | $COP_d$ | 1.04 | - |
| Pour les pompes à chaleur air-eau : Tj = -15°C (si TOL < -20°C) | $P_{dh}$ | N/A | kW | Pour les pompes à chaleur air-eau : Tj = -15°C (si TOL < -20°C) | $COP_d$ | N/A | - |
| Température bivalente | $T_{biv}$ | -15 | °C | Pour les pompes à chaleur air-eau : température limite d'exploitation | TOL | -22 | °C |
| Capacité de cycle pour le chauffage | $P_{cych}$ | N/A | kW | Efficacité de l'intervalle de cycle | $COP_{cyc}$ | N/A | - |
| Coefficient de dégradation (**) | $C_{dh}$ | 0.9 | kW | Température limite de fonctionnement de l'eau de chauffage | WTOL | 65 | °C |
| Consommation électrique en dehors du mode actif | | | | Chauffage d'appoint | | | |
| Mode hors tension | $P_{OFF}$ | 0.010 | kW | | | | |
| Mode thermostat éteint | $P_{TO}$ | 0.010 | kW | Puissance thermique nominale (**) | $p_{sup}$ | 6.9 | KW |
| Mode veille | $P_{SB}$ | 0.010 | kW | Type d'entrée d'énergie | Électrique | | |
| Mode chauffage du carter | $P_{CK}$ | 0.000 | kW | | | | |

| **Autre articles** | | | | | | | |
|---|---|---|---|---|---|---|---|
| Contrôle de la capacité | variables | | | Pour les pompes à chaleur air-eau : Débit d'air nominal, à l'extérieur | - | 6000 | $m^3/h$ |
| Niveau de puissance sonore, intérieur/extérieur | $L_{WA}$ | -/68 | dB | Pour les pompes à chaleur eau-eau ou eau saumure-eau : Débit d'eau ou de fluide caloporteur nominal, échangeur de chaleur extérieur | - | N/A | $m^3/h$ |
| Consommation annuelle d'énergie | $Q_{HE}$ | 9389 | kWh | | | | |
| Pour un chauffe-eau combiné avec pompe à chaleur : | | | | | | | |
| **Profil de charge déclaré** | N/A | | | **Efficacité énergétique pour le chauffage de l'eau** | $\eta_{wh}$ | N/A | % |
| Consommation quotidienne d'électricité | $Q_{elec}$ | N/A | kWh | Consommation quotidienne de combustible | $Q_{fuel}$ | N/A | kWh |
| Consommation annuelle d'électricité | AEC | N/A | kWh | Consommation annuelle de combustible | AFC | N/A | GJ |
| Détails de contact | Consultez la couverture arrière du manuel. | | | | | | |

(*) Pour les chauffe-eau thermodynamiques et les chauffe-eau combinés thermodynamiques, la puissance thermique nominale est égale à la charge de conception pour le chauffage, et la puissance thermique nominale d'un chauffage d'appoint est égale à la capacité d'appoint pour le chauffage sup(Tj). (**) Si Cdh n'est pas déterminé par mesure, alors le coefficient de dégradation par défaut est Cdh = 0,9.

# Paramètres techniques

| | |
|---|---|
| Modèle(s): | 3 - PH 12kw (chauffage 9kw); 3 - PH 12kw (chauffage 6kw); 3 - PH 12kw (chauffage 3kW); 3 - PH 12kw |
| Pompe à chaleur air-eau | oui |
| Pompe à chaleur eau-eau | non |
| Pompe à chaleur eau glycolée-eau | non |
| Pompe à chaleur basse température | non |
| Équipée d'une résistance de chauffage supplémentaire | Oui (pour 3 - PH 12kw (chauffage 9kw); 3 - PH 12kw (chauffage 6kw); 3 - PH 12kw (chauffage 3kW)) Aucun (pour 3 - PH 12kw) |
| Chauffe-eau combiné avec pompe à chaleur | non |
| Conditions climatiques déclarées ; | Moyen |

Les paramètres sont déclarés pour une application basse température;

| Article | Symbol | Valeur | Unité | Article | Symbol | Valeur | Unité |
|---|---|---|---|---|---|---|---|
| **Puissance thermique nominale(*)** | Puissance nominale | 12 | kW | **Efficacité énergétique saisonnière du chauffage de l'espace** | $\eta_s$ | 187 | % |
| Capacité déclarée pour le chauffage en charge partielle à une température intérieure de 20 °C et une température extérieure de Tj | | | | Capacité déclarée de chauffage pour une charge partielle à une température intérieure de 20°C et une température extérieure de Tj | | | |
| $T_j$ = – 7°C | Puissance nominale | 10.7 | kW | $T_j$ = – 7°C | $COP_d$ | 2.90 | - |
| $T_j$ = + 2°C | $P_{dh}$ | 7.0 | kW | $T_j$ = + 2°C | $COP_d$ | 4.53 | - |
| $T_j$ = + 7°C | $P_{dh}$ | 4.6 | kW | $T_j$ = + 7°C | $COP_d$ | 6.65 | - |
| $T_j$ = + 12°C | $P_{dh}$ | 4.2 | kW | $T_j$ = + 12°C | $COP_d$ | 8.92 | - |
| $T_j$ = température bivalente | $P_{dh}$ | 10.7 | kW | $T_j$ = température bivalente | $COP_d$ | 2.90 | - |
| $T_j$ = température limite d'exploitation | $P_{dh}$ | 11.4 | kW | $T_j$ = température limite d'exploitation | $COP_d$ | 2.63 | - |
| Pour les pompes à chaleur air-eau : Tj = -15°C (si TOL < -20°C) | $P_{dh}$ | N/A | kW | Pour les pompes à chaleur air-eau : Tj = -15°C (si TOL < -20°C) | $COP_d$ | N/A | - |
| Température bivalente | $T_{biv}$ | -7 | °C | Pour les pompes à chaleur air-eau : température limite d'exploitation | TOL | -10 | °C |
| Capacité de cycle pour le chauffage | $P_{cych}$ | N/A | kW | Efficacité de l'intervalle de cycle | $COP_{cyc}$ | N/A | - |
| Coefficient de dégradation (**) | $C_{dh}$ | 0.9 | kW | Température limite de fonctionnement de l'eau de chauffage | WTOL | 65 | °C |
| Consommation électrique en dehors du mode actif | | | | Chauffage d'appoint | | | |
| Mode hors tension | $P_{OFF}$ | 0.010 | kW | | | | |
| Mode thermostat éteint | $P_{TO}$ | 0.010 | kW | Puissance thermique nominale (**) | $p_{sup}$ | 0.6 | KW |
| Mode veille | $P_{SB}$ | 0.010 | kW | Type d'entrée d'énergie | Électrique | | |
| Mode chauffage du carter | $P_{CK}$ | 0.000 | kW | | | | |

| **Autre articles** | | | | | | | |
|---|---|---|---|---|---|---|---|
| Contrôle de la capacité | variables | | | Pour les pompes à chaleur air-eau : Débit d'air nominal, à l'extérieur | - | 5000 | $m^3/h$ |
| Niveau de puissance sonore, intérieur/extérieur | $L_{WA}$ | -/64 | dB | Pour les pompes à chaleur eau-eau ou eau saumure-eau : Débit d'eau ou de fluide caloporteur nominal, échangeur de chaleur extérieur | - | N/A | $m^3/h$ |
| Consommation annuelle d'énergie | $Q_{HE}$ | 5256 | kWh | | | | |
| Pour un chauffe-eau combiné avec pompe à chaleur : | | | | | | | |
| **Profil de charge déclaré** | N/A | | | **Efficacité énergétique pour le chauffage de l'eau** | $\eta_{wh}$ | N/A | % |
| Consommation quotidienne d'électricité | $Q_{elec}$ | N/A | kWh | Consommation quotidienne de combustible | $Q_{fuel}$ | N/A | kWh |
| Consommation annuelle d'électricité | AEC | N/A | kWh | Consommation annuelle de combustible | AFC | N/A | GJ |
| Détails de contact | Consultez la couverture arrière du manuel. | | | | | | |

(*) Pour les chauffe-eau thermodynamiques et les chauffe-eau combinés thermodynamiques, la puissance thermique nominale est égale à la charge de conception pour le chauffage, et la puissance thermique nominale d'un chauffage d'appoint est égale à la capacité d'appoint pour le chauffage sup(Tj). (**) Si Cdh n'est pas déterminé par mesure, alors le coefficient de dégradation par défaut est Cdh = 0,9.

# Paramètres techniques

| | |
|---|---|
| Modèle(s): | 3 - PH 12kw (chauffage 9kw); 3 - PH 12kw (chauffage 6kw); 3 - PH 12kw (chauffage 3kW); 3 - PH 12kw |
| Pompe à chaleur air-eau | oui |
| Pompe à chaleur eau-eau | non |
| Pompe à chaleur eau glycolée-eau | non |
| Pompe à chaleur basse température | non |
| Équipée d'une résistance de chauffage supplémentaire | Oui (pour 3 - PH 12kw (chauffage 9kw); 3 - PH 12kw (chauffage 6kw); 3 - PH 12kw (chauffage 3kW)) Aucun (pour 3 - PH 12kw) |
| Chauffe-eau combiné avec pompe à chaleur | non |
| Conditions climatiques déclarées ; | plus chaud |

Les paramètres sont déclarés pour une application basse température;

| Article | Symbol | Valeur | Unité | Article | Symbol | Valeur | Unité |
|---|---|---|---|---|---|---|---|
| **Puissance thermique nominale(*)** | Puissance nominale | 11 | kW | **Efficacité énergétique saisonnière du chauffage de l'espace** | $\eta_s$ | 253 | % |
| Capacité déclarée pour le chauffage en charge partielle à une température intérieure de 20 °C et une température extérieure de Tj | | | | Capacité déclarée de chauffage pour une charge partielle à une température intérieure de 20°C et une température extérieure de Tj | | | |
| $T_j$ = – 7°C | Puissance nominale | N/A | kW | $T_j$ = – 7°C | $COP_d$ | N/A | - |
| $T_j$ = + 2°C | $P_{dh}$ | 11.1 | kW | $T_j$ = + 2°C | $COP_d$ | 3.62 | - |
| $T_j$ = + 7°C | $P_{dh}$ | 7.2 | kW | $T_j$ = + 7°C | $COP_d$ | 5.64 | - |
| $T_j$ = + 12°C | $P_{dh}$ | 4.7 | kW | $T_j$ = + 12°C | $COP_d$ | 8.34 | - |
| $T_j$ = température bivalente | $P_{dh}$ | 7.2 | kW | $T_j$ = température bivalente | $COP_d$ | 5.64 | - |
| $T_j$ = température limite d'exploitation | $P_{dh}$ | 11.1 | kW | $T_j$ = température limite d'exploitation | $COP_d$ | 3.62 | - |
| Pour les pompes à chaleur air-eau : Tj = -15°C (si TOL < -20°C) | $P_{dh}$ | N/A | kW | Pour les pompes à chaleur air-eau : Tj = -15°C (si TOL < -20°C) | $COP_d$ | N/A | - |
| Température bivalente | $T_{biv}$ | 7 | °C | Pour les pompes à chaleur air-eau : température limite d'exploitation | TOL | 2 | °C |
| Capacité de cycle pour le chauffage | $P_{cych}$ | N/A | kW | Efficacité de l'intervalle de cycle | $COP_{cyc}$ | N/A | - |
| Coefficient de dégradation (**) | $C_{dh}$ | 0.9 | kW | Température limite de fonctionnement de l'eau de chauffage | WTOL | 65 | °C |
| Consommation électrique en dehors du mode actif | | | | Chauffage d'appoint | | | |
| Mode hors tension | $P_{OFF}$ | 0.010 | kW | | | | |
| Mode thermostat éteint | $P_{TO}$ | 0.010 | kW | Puissance thermique nominale (**) | $p_{sup}$ | 0.0 | KW |
| Mode veille | $P_{SB}$ | 0.010 | kW | Type d'entrée d'énergie | Électrique | | |
| Mode chauffage du carter | $P_{CK}$ | 0.000 | kW | | | | |

| **Autre articles** | | | | | | | |
|---|---|---|---|---|---|---|---|
| Contrôle de la capacité | variables | | | Pour les pompes à chaleur air-eau : Débit d'air nominal, à l'extérieur | - | 5000 | $m^3/h$ |
| Niveau de puissance sonore, intérieur/extérieur | $L_{WA}$ | -/64 | dB | Pour les pompes à chaleur eau-eau ou eau saumure-eau : Débit d'eau ou de fluide caloporteur nominal, échangeur de chaleur extérieur | - | N/A | $m^3/h$ |
| Consommation annuelle d'énergie | $Q_{HE}$ | 2325 | kWh | | | | |
| Pour un chauffe-eau combiné avec pompe à chaleur : | | | | | | | |
| **Profil de charge déclaré** | N/A | | | **Efficacité énergétique pour le chauffage de l'eau** | $\eta_{wh}$ | N/A | % |
| Consommation quotidienne d'électricité | $Q_{elec}$ | N/A | kWh | Consommation quotidienne de combustible | $Q_{fuel}$ | N/A | kWh |
| Consommation annuelle d'électricité | AEC | N/A | kWh | Consommation annuelle de combustible | AFC | N/A | GJ |
| Détails de contact | Consultez la couverture arrière du manuel. | | | | | | |

(*) Pour les chauffe-eau thermodynamiques et les chauffe-eau combinés thermodynamiques, la puissance thermique nominale est égale à la charge de conception pour le chauffage, et la puissance thermique nominale d'un chauffage d'appoint est égale à la capacité d'appoint pour le chauffage sup(Tj). (**) Si Cdh n'est pas déterminé par mesure, alors le coefficient de dégradation par défaut est Cdh = 0,9.

# Paramètres techniques

| | |
|---|---|
| Modèle(s): | 3 - PH 12kw (chauffage 9kw); 3 - PH 12kw (chauffage 6kw); 3 - PH 12kw (chauffage 3kW); 3 - PH 12kw |
| Pompe à chaleur air-eau | oui |
| Pompe à chaleur eau-eau | non |
| Pompe à chaleur eau glycolée-eau | non |
| Pompe à chaleur basse température | non |
| Équipée d'une résistance de chauffage supplémentaire | Oui (pour 3 - PH 12kw (chauffage 9kw); 3 - PH 12kw (chauffage 6kw); 3 - PH 12kw (chauffage 3kW)) Aucun (pour 3 - PH 12kw) |
| Chauffe-eau combiné avec pompe à chaleur | non |
| Conditions climatiques déclarées ; | plus froid |

Les paramètres sont déclarés pour une application basse température;

| Article | Symbol | Valeur | Unité | Article | Symbol | Valeur | Unité |
|---|---|---|---|---|---|---|---|
| **Puissance thermique nominale(*)** | Puissance nominale | 11 | kW | **Efficacité énergétique saisonnière du chauffage de l'espace** | $\eta_s$ | 163 | % |
| Capacité déclarée pour le chauffage en charge partielle à une température intérieure de 20 °C et une température extérieure de Tj | | | | Capacité déclarée de chauffage pour une charge partielle à une température intérieure de 20°C et une température extérieure de Tj | | | |
| $T_j$ = – 7°C | Puissance nominale | 7.2 | kW | $T_j$ = – 7°C | $COP_d$ | 3.51 | - |
| $T_j$ = + 2°C | $P_{dh}$ | 4.2 | kW | $T_j$ = + 2°C | $COP_d$ | 5.06 | - |
| $T_j$ = + 7°C | $P_{dh}$ | 3.2 | kW | $T_j$ = + 7°C | $COP_d$ | 6.20 | - |
| $T_j$ = + 12°C | $P_{dh}$ | 3.6 | kW | $T_j$ = + 12°C | $COP_d$ | 8.19 | - |
| $T_j$ = température bivalente | $P_{dh}$ | 9.3 | kW | $T_j$ = température bivalente | $COP_d$ | 2.59 | - |
| $T_j$ = température limite d'exploitation | $P_{dh}$ | 7.1 | kW | $T_j$ = température limite d'exploitation | $COP_d$ | 2.08 | - |
| Pour les pompes à chaleur air-eau : Tj = -15°C (si TOL < -20°C) | $P_{dh}$ | N/A | kW | Pour les pompes à chaleur air-eau : Tj = -15°C (si TOL < -20°C) | $COP_d$ | N/A | - |
| Température bivalente | $T_{biv}$ | -15 | °C | Pour les pompes à chaleur air-eau : température limite d'exploitation | TOL | -22 | °C |
| Capacité de cycle pour le chauffage | $P_{cych}$ | N/A | kW | Efficacité de l'intervalle de cycle | $COP_{cyc}$ | N/A | - |
| Coefficient de dégradation (**) | $C_{dh}$ | 0.9 | kW | Température limite de fonctionnement de l'eau de chauffage | WTOL | 65 | °C |
| Consommation électrique en dehors du mode actif | | | | Chauffage d'appoint | | | |
| Mode hors tension | $P_{OFF}$ | 0.010 | kW | | | | |
| Mode thermostat éteint | $P_{TO}$ | 0.010 | kW | Puissance thermique nominale (**) | $p_{sup}$ | 3.9 | KW |
| Mode veille | $P_{SB}$ | 0.010 | kW | Type d'entrée d'énergie | Électrique | | |
| Mode chauffage du carter | $P_{CK}$ | 0.000 | kW | | | | |

| **Autre articles** | | | | | | | |
|---|---|---|---|---|---|---|---|
| Contrôle de la capacité | variables | | | Pour les pompes à chaleur air-eau : Débit d'air nominal, à l'extérieur | - | 5000 | $m^3/h$ |
| Niveau de puissance sonore, intérieur/extérieur | $L_{WA}$ | -/64 | dB | Pour les pompes à chaleur eau-eau ou eau saumure-eau : Débit d'eau ou de fluide caloporteur nominal, échangeur de chaleur extérieur | - | N/A | $m^3/h$ |
| Consommation annuelle d'énergie | $Q_{HE}$ | 6738 | kWh | | | | |
| Pour un chauffe-eau combiné avec pompe à chaleur : | | | | | | | |
| **Profil de charge déclaré** | N/A | | | **Efficacité énergétique pour le chauffage de l'eau** | $\eta_{wh}$ | N/A | % |
| Consommation quotidienne d'électricité | $Q_{elec}$ | N/A | kWh | Consommation quotidienne de combustible | $Q_{fuel}$ | N/A | kWh |
| Consommation annuelle d'électricité | AEC | N/A | kWh | Consommation annuelle de combustible | AFC | N/A | GJ |
| Détails de contact | Consultez la couverture arrière du manuel. | | | | | | |

(*) Pour les chauffe-eau thermodynamiques et les chauffe-eau combinés thermodynamiques, la puissance thermique nominale est égale à la charge de conception pour le chauffage, et la puissance thermique nominale d'un chauffage d'appoint est égale à la capacité d'appoint pour le chauffage sup(Tj). (**) Si Cdh n'est pas déterminé par mesure, alors le coefficient de dégradation par défaut est Cdh = 0,9.

# Paramètres techniques

| | |
|---|---|
| Modèle(s): | 3 - PH 12kw (chauffage 9kw); 3 - PH 12kw (chauffage 6kw); 3 - PH 12kw (chauffage 3kW); 3 - PH 12kw |
| Pompe à chaleur air-eau | oui |
| Pompe à chaleur eau-eau | non |
| Pompe à chaleur eau glycolée-eau | non |
| Pompe à chaleur basse température | non |
| Équipée d'une résistance de chauffage supplémentaire | Oui (pour 3 - PH 12kw (chauffage 9kw); 3 - PH 12kw (chauffage 6kw); 3 - PH 12kw (chauffage 3kW)) Aucun (pour 3 - PH 12kw) |
| Chauffe-eau combiné avec pompe à chaleur | non |
| Conditions climatiques déclarées ; | Moyen |

Les paramètres sont déclarés pour une application moyenne température.

| Article | Symbol | Valeur | Unité | Article | Symbol | Valeur | Unité |
|---|---|---|---|---|---|---|---|
| **Puissance thermique nominale(*)** | Puissance nominale | 12 | kW | **Efficacité énergétique saisonnière du chauffage de l'espace** | $\eta_s$ | 138 | % |
| Capacité déclarée pour le chauffage en charge partielle à une température intérieure de 20 °C et une température extérieure de Tj | | | | Capacité déclarée de chauffage pour une charge partielle à une température intérieure de 20°C et une température extérieure de Tj | | | |
| $T_j$ = – 7°C | Puissance nominale | 10.7 | kW | $T_j$ = – 7°C | $COP_d$ | 2.13 | - |
| $T_j$ = + 2°C | $P_{dh}$ | 6.6 | kW | $T_j$ = + 2°C | $COP_d$ | 3.33 | - |
| $T_j$ = + 7°C | $P_{dh}$ | 4.4 | kW | $T_j$ = + 7°C | $COP_d$ | 4.88 | - |
| $T_j$ = + 12°C | $P_{dh}$ | 4.0 | kW | $T_j$ = + 12°C | $COP_d$ | 7.67 | - |
| $T_j$ = température bivalente | $P_{dh}$ | 10.7 | kW | $T_j$ = température bivalente | $COP_d$ | 2.13 | - |
| $T_j$ = température limite d'exploitation | $P_{dh}$ | 10.0 | kW | $T_j$ = température limite d'exploitation | $COP_d$ | 1.82 | - |
| Pour les pompes à chaleur air-eau : Tj = -15°C (si TOL < -20°C) | $P_{dh}$ | N/A | kW | Pour les pompes à chaleur air-eau : Tj = -15°C (si TOL < -20°C) | $COP_d$ | N/A | - |
| Température bivalente | $T_{biv}$ | -7 | °C | Pour les pompes à chaleur air-eau : température limite d'exploitation | TOL | -10 | °C |
| Capacité de cycle pour le chauffage | $P_{cych}$ | N/A | kW | Efficacité de l'intervalle de cycle | $COP_{cyc}$ | N/A | - |
| Coefficient de dégradation (**) | $C_{dh}$ | 0.9 | kW | Température limite de fonctionnement de l'eau de chauffage | WTOL | 65 | °C |
| Consommation électrique en dehors du mode actif | | | | Chauffage d'appoint | | | |
| Mode hors tension | $P_{OFF}$ | 0.010 | kW | | | | |
| Mode thermostat éteint | $P_{TO}$ | 0.010 | kW | Puissance thermique nominale (**) | $p_{sup}$ | 2.0 | KW |
| Mode veille | $P_{SB}$ | 0.010 | kW | Type d'entrée d'énergie | Électrique | | |
| Mode chauffage du carter | $P_{CK}$ | 0.000 | kW | | | | |

| **Autre articles** | | | | | | | |
|---|---|---|---|---|---|---|---|
| Contrôle de la capacité | variables | | | Pour les pompes à chaleur air-eau : Débit d'air nominal, à l'extérieur | - | 5000 | $m^3/h$ |
| Niveau de puissance sonore, intérieur/extérieur | $L_{WA}$ | -/64 | dB | Pour les pompes à chaleur eau-eau ou eau saumure-eau : Débit d'eau ou de fluide caloporteur nominal, échangeur de chaleur extérieur | - | N/A | $m^3/h$ |
| Consommation annuelle d'énergie | $Q_{HE}$ | 7085 | kWh | | | | |
| Pour un chauffe-eau combiné avec pompe à chaleur : | | | | | | | |
| **Profil de charge déclaré** | N/A | | | **Efficacité énergétique pour le chauffage de l'eau** | $\eta_{wh}$ | N/A | % |
| Consommation quotidienne d'électricité | $Q_{elec}$ | N/A | kWh | Consommation quotidienne de combustible | $Q_{fuel}$ | N/A | kWh |
| Consommation annuelle d'électricité | AEC | N/A | kWh | Consommation annuelle de combustible | AFC | N/A | GJ |
| Détails de contact | Consultez la couverture arrière du manuel. | | | | | | |

(*) Pour les chauffe-eau thermodynamiques et les chauffe-eau combinés thermodynamiques, la puissance thermique nominale est égale à la charge de conception pour le chauffage, et la puissance thermique nominale d'un chauffage d'appoint est égale à la capacité d'appoint pour le chauffage sup(Tj). (**) Si Cdh n'est pas déterminé par mesure, alors le coefficient de dégradation par défaut est Cdh = 0,9.

# Paramètres techniques

| | |
|---|---|
| Modèle(s): | 3 - PH 12kw (chauffage 9kw); 3 - PH 12kw (chauffage 6kw); 3 - PH 12kw (chauffage 3kW); 3 - PH 12kw |
| Pompe à chaleur air-eau | oui |
| Pompe à chaleur eau-eau | non |
| Pompe à chaleur eau glycolée-eau | non |
| Pompe à chaleur basse température | non |
| Équipée d'une résistance de chauffage supplémentaire | Oui (pour 3 - PH 12kw (chauffage 9kw); 3 - PH 12kw (chauffage 6kw); 3 - PH 12kw (chauffage 3kW)) Aucun (pour 3 - PH 12kw) |
| Chauffe-eau combiné avec pompe à chaleur | non |
| Conditions climatiques déclarées ; | plus chaud |

Les paramètres sont déclarés pour une application moyenne température.

| Article | Symbol | Valeur | Unité | Article | Symbol | Valeur | Unité |
|---|---|---|---|---|---|---|---|
| **Puissance thermique nominale(*)** | Puissance nominale | 12 | kW | **Efficacité énergétique saisonnière du chauffage de l'espace** | $\eta_s$ | 175 | % |
| Capacité déclarée pour le chauffage en charge partielle à une température intérieure de 20 °C et une température extérieure de Tj | | | | Capacité déclarée de chauffage pour une charge partielle à une température intérieure de 20°C et une température extérieure de Tj | | | |
| $T_j$ = – 7°C | Puissance nominale | N/A | kW | $T_j$ = – 7°C | $COP_d$ | N/A | - |
| $T_j$ = + 2°C | $P_{dh}$ | 12.1 | kW | $T_j$ = + 2°C | $COP_d$ | 2.27 | - |
| $T_j$ = + 7°C | $P_{dh}$ | 8.0 | kW | $T_j$ = + 7°C | $COP_d$ | 3.85 | - |
| $T_j$ = + 12°C | $P_{dh}$ | 4.3 | kW | $T_j$ = + 12°C | $COP_d$ | 5.95 | - |
| $T_j$ = température bivalente | $P_{dh}$ | 8.0 | kW | $T_j$ = température bivalente | $COP_d$ | 3.85 | - |
| $T_j$ = température limite d'exploitation | $P_{dh}$ | 12.1 | kW | $T_j$ = température limite d'exploitation | $COP_d$ | 2.27 | - |
| Pour les pompes à chaleur air-eau : Tj = -15°C (si TOL < -20°C) | $P_{dh}$ | N/A | kW | Pour les pompes à chaleur air-eau : Tj = -15°C (si TOL < -20°C) | $COP_d$ | N/A | - |
| Température bivalente | $T_{biv}$ | 7 | °C | Pour les pompes à chaleur air-eau : température limite d'exploitation | TOL | 2 | °C |
| Capacité de cycle pour le chauffage | $P_{cych}$ | N/A | kW | Efficacité de l'intervalle de cycle | $COP_{cyc}$ | N/A | - |
| Coefficient de dégradation (**) | $C_{dh}$ | 0.9 | kW | Température limite de fonctionnement de l'eau de chauffage | WTOL | 65 | °C |
| Consommation électrique en dehors du mode actif | | | | Chauffage d'appoint | | | |
| Mode hors tension | $P_{OFF}$ | 0.010 | kW | | | | |
| Mode thermostat éteint | $P_{TO}$ | 0.010 | kW | Puissance thermique nominale (**) | $p_{sup}$ | 0.6 | KW |
| Mode veille | $P_{SB}$ | 0.010 | kW | Type d'entrée d'énergie | Électrique | | |
| Mode chauffage du carter | $P_{CK}$ | 0.000 | kW | | | | |

| **Autre articles** | | | | | | | |
|---|---|---|---|---|---|---|---|
| Contrôle de la capacité | variables | | | Pour les pompes à chaleur air-eau : Débit d'air nominal, à l'extérieur | - | 5000 | $m^3/h$ |
| Niveau de puissance sonore, intérieur/extérieur | $L_{WA}$ | -/64 | dB | Pour les pompes à chaleur eau-eau ou eau saumure-eau : Débit d'eau ou de fluide caloporteur nominal, échangeur de chaleur extérieur | - | N/A | $m^3/h$ |
| Consommation annuelle d'énergie | $Q_{HE}$ | 3733 | kWh | | | | |
| Pour un chauffe-eau combiné avec pompe à chaleur : | | | | | | | |
| **Profil de charge déclaré** | N/A | | | **Efficacité énergétique pour le chauffage de l'eau** | $\eta_{wh}$ | N/A | % |
| Consommation quotidienne d'électricité | $Q_{elec}$ | N/A | kWh | Consommation quotidienne de combustible | $Q_{fuel}$ | N/A | kWh |
| Consommation annuelle d'électricité | AEC | N/A | kWh | Consommation annuelle de combustible | AFC | N/A | GJ |
| Détails de contact | Consultez la couverture arrière du manuel. | | | | | | |

(*) Pour les chauffe-eau thermodynamiques et les chauffe-eau combinés thermodynamiques, la puissance thermique nominale est égale à la charge de conception pour le chauffage, et la puissance thermique nominale d'un chauffage d'appoint est égale à la capacité d'appoint pour le chauffage sup(Tj). (**) Si Cdh n'est pas déterminé par mesure, alors le coefficient de dégradation par défaut est Cdh = 0,9.

# Paramètres techniques

| | |
|---|---|
| Modèle(s): | 3 - PH 12kw (chauffage 9kw); 3 - PH 12kw (chauffage 6kw); 3 - PH 12kw (chauffage 3kW); 3 - PH 12kw |
| Pompe à chaleur air-eau | oui |
| Pompe à chaleur eau-eau | non |
| Pompe à chaleur eau glycolée-eau | non |
| Pompe à chaleur basse température | non |
| Équipée d'une résistance de chauffage supplémentaire | Oui (pour 3 - PH 12kw (chauffage 9kw); 3 - PH 12kw (chauffage 6kw); 3 - PH 12kw (chauffage 3kW)) Aucun (pour 3 - PH 12kw) |
| Chauffe-eau combiné avec pompe à chaleur | non |
| Conditions climatiques déclarées ; | plus froid |

Les paramètres sont déclarés pour une application moyenne température.

| Article | Symbol | Valeur | Unité | Article | Symbol | Valeur | Unité |
|---|---|---|---|---|---|---|---|
| **Puissance thermique nominale(*)** | Puissance nominale | 10 | kW | **Efficacité énergétique saisonnière du chauffage de l'espace** | $\eta_s$ | 119 | % |
| Capacité déclarée pour le chauffage en charge partielle à une température intérieure de 20 °C et une température extérieure de Tj | | | | Capacité déclarée de chauffage pour une charge partielle à une température intérieure de 20°C et une température extérieure de Tj | | | |
| $T_j$ = – 7°C | Puissance nominale | 6.7 | kW | $T_j$ = – 7°C | $COP_d$ | 2.58 | - |
| $T_j$ = + 2°C | $P_{dh}$ | 4.0 | kW | $T_j$ = + 2°C | $COP_d$ | 3.68 | - |
| $T_j$ = + 7°C | $P_{dh}$ | 2.9 | kW | $T_j$ = + 7°C | $COP_d$ | 4.57 | - |
| $T_j$ = + 12°C | $P_{dh}$ | 3.3 | kW | $T_j$ = + 12°C | $COP_d$ | 6.59 | - |
| $T_j$ = température bivalente | $P_{dh}$ | 8.5 | kW | $T_j$ = température bivalente | $COP_d$ | 1.89 | - |
| $T_j$ = température limite d'exploitation | $P_{dh}$ | 4.7 | kW | $T_j$ = température limite d'exploitation | $COP_d$ | 1.21 | - |
| Pour les pompes à chaleur air-eau : Tj = -15°C (si TOL < -20°C) | $P_{dh}$ | N/A | kW | Pour les pompes à chaleur air-eau : Tj = -15°C (si TOL < -20°C) | $COP_d$ | N/A | - |
| Température bivalente | $T_{biv}$ | -15 | °C | Pour les pompes à chaleur air-eau : température limite d'exploitation | TOL | -22 | °C |
| Capacité de cycle pour le chauffage | $P_{cych}$ | N/A | kW | Efficacité de l'intervalle de cycle | $COP_{cyc}$ | N/A | - |
| Coefficient de dégradation (**) | $C_{dh}$ | 0.9 | kW | Température limite de fonctionnement de l'eau de chauffage | WTOL | 65 | °C |
| Consommation électrique en dehors du mode actif | | | | Chauffage d'appoint | | | |
| Mode hors tension | $P_{OFF}$ | 0.010 | kW | | | | |
| Mode thermostat éteint | $P_{TO}$ | 0.010 | kW | Puissance thermique nominale (**) | $p_{sup}$ | 5.3 | KW |
| Mode veille | $P_{SB}$ | 0.010 | kW | Type d'entrée d'énergie | Électrique | | |
| Mode chauffage du carter | $P_{CK}$ | 0.000 | kW | | | | |

| **Autre articles** | | | | | | | |
|---|---|---|---|---|---|---|---|
| Contrôle de la capacité | variables | | | Pour les pompes à chaleur air-eau : Débit d'air nominal, à l'extérieur | - | 5000 | $m^3/h$ |
| Niveau de puissance sonore, intérieur/extérieur | $L_{WA}$ | -/64 | dB | Pour les pompes à chaleur eau-eau ou eau saumure-eau : Débit d'eau ou de fluide caloporteur nominal, échangeur de chaleur extérieur | - | N/A | $m^3/h$ |
| Consommation annuelle d'énergie | $Q_{HE}$ | 8459 | kWh | | | | |
| Pour un chauffe-eau combiné avec pompe à chaleur : | | | | | | | |
| **Profil de charge déclaré** | N/A | | | **Efficacité énergétique pour le chauffage de l'eau** | $\eta_{wh}$ | N/A | % |
| Consommation quotidienne d'électricité | $Q_{elec}$ | N/A | kWh | Consommation quotidienne de combustible | $Q_{fuel}$ | N/A | kWh |
| Consommation annuelle d'électricité | AEC | N/A | kWh | Consommation annuelle de combustible | AFC | N/A | GJ |
| Détails de contact | Consultez la couverture arrière du manuel. | | | | | | |

(*) Pour les chauffe-eau thermodynamiques et les chauffe-eau combinés thermodynamiques, la puissance thermique nominale est égale à la charge de conception pour le chauffage, et la puissance thermique nominale d'un chauffage d'appoint est égale à la capacité d'appoint pour le chauffage sup(Tj). (**) Si Cdh n'est pas déterminé par mesure, alors le coefficient de dégradation par défaut est Cdh = 0,9.

# Paramètres techniques

| | |
|---|---|
| Modèle(s): | 3 - PH 14kw (chauffage 9kw); 3 - PH 14kw (chauffage 6kw); 3 - PH 14kw (chauffage 3kW); 3 - PH 14kw |
| Pompe à chaleur air-eau | oui |
| Pompe à chaleur eau-eau | non |
| Pompe à chaleur eau glycolée-eau | non |
| Pompe à chaleur basse température | non |
| Équipée d'une résistance de chauffage supplémentaire | Oui (pour 3 - PH 14kw (chauffage 9kw); 3 - PH 14kw (chauffage 6kw); 3 - PH 14kw (chauffage 3kW)) Aucun (pour 3 - PH 14kw) |
| Chauffe-eau combiné avec pompe à chaleur | non |
| Conditions climatiques déclarées ; | Moyen |

Les paramètres sont déclarés pour une application basse température;

| Article | Symbol | Valeur | Unité | Article | Symbol | Valeur | Unité |
|---|---|---|---|---|---|---|---|
| **Puissance thermique nominale(*)** | Puissance nominale | 14 | kW | **Efficacité énergétique saisonnière du chauffage de l'espace** | $\eta_s$ | 182 | % |
| Capacité déclarée pour le chauffage en charge partielle à une température intérieure de 20 °C et une température extérieure de Tj | | | | Capacité déclarée de chauffage pour une charge partielle à une température intérieure de 20°C et une température extérieure de Tj | | | |
| $T_j$ = – 7°C | Puissance nominale | 12.4 | kW | $T_j$ = – 7°C | $COP_d$ | 2.80 | - |
| $T_j$ = + 2°C | $P_{dh}$ | 7.5 | kW | $T_j$ = + 2°C | $COP_d$ | 4.40 | - |
| $T_j$ = + 7°C | $P_{dh}$ | 5.1 | kW | $T_j$ = + 7°C | $COP_d$ | 6.38 | - |
| $T_j$ = + 12°C | $P_{dh}$ | 4.9 | kW | $T_j$ = + 12°C | $COP_d$ | 9.16 | - |
| $T_j$ = température bivalente | $P_{dh}$ | 12.4 | kW | $T_j$ = température bivalente | $COP_d$ | 2.80 | - |
| $T_j$ = température limite d'exploitation | $P_{dh}$ | 12.9 | kW | $T_j$ = température limite d'exploitation | $COP_d$ | 2.63 | - |
| Pour les pompes à chaleur air-eau : Tj = -15°C (si TOL < -20°C) | $P_{dh}$ | N/A | kW | Pour les pompes à chaleur air-eau : Tj = -15°C (si TOL < -20°C) | $COP_d$ | N/A | - |
| Température bivalente | $T_{biv}$ | -7 | °C | Pour les pompes à chaleur air-eau : température limite d'exploitation | TOL | -10 | °C |
| Capacité de cycle pour le chauffage | $P_{cych}$ | N/A | kW | Efficacité de l'intervalle de cycle | $COP_{cyc}$ | N/A | - |
| Coefficient de dégradation (**) | $C_{dh}$ | 0.9 | kW | Température limite de fonctionnement de l'eau de chauffage | WTOL | 65 | °C |
| Consommation électrique en dehors du mode actif | | | | Chauffage d'appoint | | | |
| Mode hors tension | $P_{OFF}$ | 0.010 | kW | | | | |
| Mode thermostat éteint | $P_{TO}$ | 0.010 | kW | Puissance thermique nominale (**) | $p_{sup}$ | 1.1 | KW |
| Mode veille | $P_{SB}$ | 0.010 | kW | Type d'entrée d'énergie | Électrique | | |
| Mode chauffage du carter | $P_{CK}$ | 0.000 | kW | | | | |

| **Autre articles** | | | | | | | |
|---|---|---|---|---|---|---|---|
| Contrôle de la capacité | variables | | | Pour les pompes à chaleur air-eau : Débit d'air nominal, à l'extérieur | - | 5500 | $m^3/h$ |
| Niveau de puissance sonore, intérieur/extérieur | $L_{WA}$ | -/66 | dB | Pour les pompes à chaleur eau-eau ou eau saumure-eau : Débit d'eau ou de fluide caloporteur nominal, échangeur de chaleur extérieur | - | N/A | $m^3/h$ |
| Consommation annuelle d'énergie | $Q_{HE}$ | 6237 | kWh | | | | |
| Pour un chauffe-eau combiné avec pompe à chaleur : | | | | | | | |
| **Profil de charge déclaré** | N/A | | | **Efficacité énergétique pour le chauffage de l'eau** | $\eta_{wh}$ | N/A | % |
| Consommation quotidienne d'électricité | $Q_{elec}$ | N/A | kWh | Consommation quotidienne de combustible | $Q_{fuel}$ | N/A | kWh |
| Consommation annuelle d'électricité | AEC | N/A | kWh | Consommation annuelle de combustible | AFC | N/A | GJ |
| Détails de contact | Consultez la couverture arrière du manuel. | | | | | | |

(*) Pour les chauffe-eau thermodynamiques et les chauffe-eau combinés thermodynamiques, la puissance thermique nominale est égale à la charge de conception pour le chauffage, et la puissance thermique nominale d'un chauffage d'appoint est égale à la capacité d'appoint pour le chauffage sup(Tj). (**) Si Cdh n'est pas déterminé par mesure, alors le coefficient de dégradation par défaut est Cdh = 0,9.

# Paramètres techniques

| | |
|---|---|
| Modèle(s): | 3 - PH 14kw (chauffage 9kw); 3 - PH 14kw (chauffage 6kw); 3 - PH 14kw (chauffage 3kW); 3 - PH 14kw |
| Pompe à chaleur air-eau | oui |
| Pompe à chaleur eau-eau | non |
| Pompe à chaleur eau glycolée-eau | non |
| Pompe à chaleur basse température | non |
| Équipée d'une résistance de chauffage supplémentaire | Oui (pour 3 - PH 14kw (chauffage 9kw); 3 - PH 14kw (chauffage 6kw); 3 - PH 14kw (chauffage 3kW)) Aucun (pour 3 - PH 14kw) |
| Chauffe-eau combiné avec pompe à chaleur | non |
| Conditions climatiques déclarées ; | plus chaud |

Les paramètres sont déclarés pour une application basse température;

| Article | Symbol | Valeur | Unité | Article | Symbol | Valeur | Unité |
|---|---|---|---|---|---|---|---|
| **Puissance thermique nominale(*)** | Puissance nominale | 12 | kW | **Efficacité énergétique saisonnière du chauffage de l'espace** | $\eta_s$ | 248 | % |
| Capacité déclarée pour le chauffage en charge partielle à une température intérieure de 20 °C et une température extérieure de Tj | | | | Capacité déclarée de chauffage pour une charge partielle à une température intérieure de 20°C et une température extérieure de Tj | | | |
| $T_j$ = – 7°C | Puissance nominale | N/A | kW | $T_j$ = – 7°C | $COP_d$ | N/A | - |
| $T_j$ = + 2°C | $P_{dh}$ | 12.3 | kW | $T_j$ = + 2°C | $COP_d$ | 3.41 | - |
| $T_j$ = + 7°C | $P_{dh}$ | 8.0 | kW | $T_j$ = + 7°C | $COP_d$ | 5.61 | - |
| $T_j$ = + 12°C | $P_{dh}$ | 4.2 | kW | $T_j$ = + 12°C | $COP_d$ | 7.94 | - |
| $T_j$ = température bivalente | $P_{dh}$ | 8.0 | kW | $T_j$ = température bivalente | $COP_d$ | 5.61 | - |
| $T_j$ = température limite d'exploitation | $P_{dh}$ | 12.3 | kW | $T_j$ = température limite d'exploitation | $COP_d$ | 3.41 | - |
| Pour les pompes à chaleur air-eau : Tj = -15°C (si TOL < -20°C) | $P_{dh}$ | N/A | kW | Pour les pompes à chaleur air-eau : Tj = -15°C (si TOL < -20°C) | $COP_d$ | N/A | - |
| Température bivalente | $T_{biv}$ | 7 | °C | Pour les pompes à chaleur air-eau : température limite d'exploitation | TOL | 2 | °C |
| Capacité de cycle pour le chauffage | $P_{cych}$ | N/A | kW | Efficacité de l'intervalle de cycle | $COP_{cyc}$ | N/A | - |
| Coefficient de dégradation (**) | $C_{dh}$ | 0.9 | kW | Température limite de fonctionnement de l'eau de chauffage | WTOL | 65 | °C |
| Consommation électrique en dehors du mode actif | | | | Chauffage d'appoint | | | |
| Mode hors tension | $P_{OFF}$ | 0.010 | kW | | | | |
| Mode thermostat éteint | $P_{TO}$ | 0.010 | kW | Puissance thermique nominale (**) | $p_{sup}$ | 0.0 | KW |
| Mode veille | $P_{SB}$ | 0.010 | kW | Type d'entrée d'énergie | Électrique | | |
| Mode chauffage du carter | $P_{CK}$ | 0.000 | kW | | | | |

| **Autre articles** | | | | | | | |
|---|---|---|---|---|---|---|---|
| Contrôle de la capacité | variables | | | Pour les pompes à chaleur air-eau : Débit d'air nominal, à l'extérieur | - | 5500 | $m^3/h$ |
| Niveau de puissance sonore, intérieur/extérieur | $L_{WA}$ | -/66 | dB | Pour les pompes à chaleur eau-eau ou eau saumure-eau : Débit d'eau ou de fluide caloporteur nominal, échangeur de chaleur extérieur | - | N/A | $m^3/h$ |
| Consommation annuelle d'énergie | $Q_{HE}$ | 2638 | kWh | | | | |
| Pour un chauffe-eau combiné avec pompe à chaleur : | | | | | | | |
| **Profil de charge déclaré** | N/A | | | **Efficacité énergétique pour le chauffage de l'eau** | $\eta_{wh}$ | N/A | % |
| Consommation quotidienne d'électricité | $Q_{elec}$ | N/A | kWh | Consommation quotidienne de combustible | $Q_{fuel}$ | N/A | kWh |
| Consommation annuelle d'électricité | AEC | N/A | kWh | Consommation annuelle de combustible | AFC | N/A | GJ |
| Détails de contact | Consultez la couverture arrière du manuel. | | | | | | |

(*) Pour les chauffe-eau thermodynamiques et les chauffe-eau combinés thermodynamiques, la puissance thermique nominale est égale à la charge de conception pour le chauffage, et la puissance thermique nominale d'un chauffage d'appoint est égale à la capacité d'appoint pour le chauffage sup(Tj). (**) Si Cdh n'est pas déterminé par mesure, alors le coefficient de dégradation par défaut est Cdh = 0,9.

# Paramètres techniques

| | |
|---|---|
| Modèle(s): | 3 - PH 14kw (chauffage 9kw); 3 - PH 14kw (chauffage 6kw); 3 - PH 14kw (chauffage 3kW); 3 - PH 14kw |
| Pompe à chaleur air-eau | oui |
| Pompe à chaleur eau-eau | non |
| Pompe à chaleur eau glycolée-eau | non |
| Pompe à chaleur basse température | non |
| Équipée d'une résistance de chauffage supplémentaire | Oui (pour 3 - PH 14kw (chauffage 9kw); 3 - PH 14kw (chauffage 6kw); 3 - PH 14kw (chauffage 3kW)) Aucun (pour 3 - PH 14kw) |
| Chauffe-eau combiné avec pompe à chaleur | non |
| Conditions climatiques déclarées ; | plus chaud |

Les paramètres sont déclarés pour une application basse température;

| Article | Symbol | Valeur | Unité | Article | Symbol | Valeur | Unité |
|---|---|---|---|---|---|---|---|
| **Puissance thermique nominale(*)** | Puissance nominale | 12 | kW | **Efficacité énergétique saisonnière du chauffage de l'espace** | $\eta_s$ | 248 | % |
| Capacité déclarée pour le chauffage en charge partielle à une température intérieure de 20 °C et une température extérieure de Tj | | | | Capacité déclarée de chauffage pour une charge partielle à une température intérieure de 20°C et une température extérieure de Tj | | | |
| $T_j$ = – 7°C | Puissance nominale | N/A | kW | $T_j$ = – 7°C | $COP_d$ | N/A | - |
| $T_j$ = + 2°C | $P_{dh}$ | 12.3 | kW | $T_j$ = + 2°C | $COP_d$ | 3.41 | - |
| $T_j$ = + 7°C | $P_{dh}$ | 8.0 | kW | $T_j$ = + 7°C | $COP_d$ | 5.61 | - |
| $T_j$ = + 12°C | $P_{dh}$ | 4.2 | kW | $T_j$ = + 12°C | $COP_d$ | 7.94 | - |
| $T_j$ = température bivalente | $P_{dh}$ | 8.0 | kW | $T_j$ = température bivalente | $COP_d$ | 5.61 | - |
| $T_j$ = température limite d'exploitation | $P_{dh}$ | 12.3 | kW | $T_j$ = température limite d'exploitation | $COP_d$ | 3.41 | - |
| Pour les pompes à chaleur air-eau : Tj = -15°C (si TOL < -20°C) | $P_{dh}$ | N/A | kW | Pour les pompes à chaleur air-eau : Tj = -15°C (si TOL < -20°C) | $COP_d$ | N/A | - |
| Température bivalente | $T_{biv}$ | 7 | °C | Pour les pompes à chaleur air-eau : température limite d'exploitation | TOL | 2 | °C |
| Capacité de cycle pour le chauffage | $P_{cych}$ | N/A | kW | Efficacité de l'intervalle de cycle | $COP_{cyc}$ | N/A | - |
| Coefficient de dégradation (**) | $C_{dh}$ | 0.9 | kW | Température limite de fonctionnement de l'eau de chauffage | WTOL | 65 | °C |
| Consommation électrique en dehors du mode actif | | | | Chauffage d'appoint | | | |
| Mode hors tension | $P_{OFF}$ | 0.010 | kW | | | | |
| Mode thermostat éteint | $P_{TO}$ | 0.010 | kW | Puissance thermique nominale (**) | $p_{sup}$ | 0.0 | KW |
| Mode veille | $P_{SB}$ | 0.010 | kW | Type d'entrée d'énergie | Électrique | | |
| Mode chauffage du carter | $P_{CK}$ | 0.000 | kW | | | | |

| **Autre articles** | | | | | | | |
|---|---|---|---|---|---|---|---|
| Contrôle de la capacité | variables | | | Pour les pompes à chaleur air-eau : Débit d'air nominal, à l'extérieur | - | 5500 | $m^3/h$ |
| Niveau de puissance sonore, intérieur/extérieur | $L_{WA}$ | -/66 | dB | Pour les pompes à chaleur eau-eau ou eau saumure-eau : Débit d'eau ou de fluide caloporteur nominal, échangeur de chaleur extérieur | - | N/A | $m^3/h$ |
| Consommation annuelle d'énergie | $Q_{HE}$ | 2638 | kWh | | | | |
| Pour un chauffe-eau combiné avec pompe à chaleur : | | | | | | | |
| **Profil de charge déclaré** | N/A | | | **Efficacité énergétique pour le chauffage de l'eau** | $\eta_{wh}$ | N/A | % |
| Consommation quotidienne d'électricité | $Q_{elec}$ | N/A | kWh | Consommation quotidienne de combustible | $Q_{fuel}$ | N/A | kWh |
| Consommation annuelle d'électricité | AEC | N/A | kWh | Consommation annuelle de combustible | AFC | N/A | GJ |
| Détails de contact | Consultez la couverture arrière du manuel. | | | | | | |

(*) Pour les chauffe-eau thermodynamiques et les chauffe-eau combinés thermodynamiques, la puissance thermique nominale est égale à la charge de conception pour le chauffage, et la puissance thermique nominale d'un chauffage d'appoint est égale à la capacité d'appoint pour le chauffage sup(Tj). (**) Si Cdh n'est pas déterminé par mesure, alors le coefficient de dégradation par défaut est Cdh = 0,9.

# Paramètres techniques

| | |
|---|---|
| Modèle(s): | 3 - PH 14kw (chauffage 9kw); 3 - PH 14kw (chauffage 6kw); 3 - PH 14kw (chauffage 3kW); 3 - PH 14kw |
| Pompe à chaleur air-eau | oui |
| Pompe à chaleur eau-eau | non |
| Pompe à chaleur eau glycolée-eau | non |
| Pompe à chaleur basse température | non |
| Équipée d'une résistance de chauffage supplémentaire | Oui (pour 3 - PH 14kw (chauffage 9kw); 3 - PH 14kw (chauffage 6kw); 3 - PH 14kw (chauffage 3kW)) Aucun (pour 3 - PH 14kw) |
| Chauffe-eau combiné avec pompe à chaleur | non |
| Conditions climatiques déclarées ; | plus chaud |

Les paramètres sont déclarés pour une application basse température;

| Article | Symbol | Valeur | Unité | Article | Symbol | Valeur | Unité |
|---|---|---|---|---|---|---|---|
| **Puissance thermique nominale(*)** | Puissance nominale | 12 | kW | **Efficacité énergétique saisonnière du chauffage de l'espace** | $\eta_s$ | 248 | % |
| Capacité déclarée pour le chauffage en charge partielle à une température intérieure de 20 °C et une température extérieure de Tj | | | | Capacité déclarée de chauffage pour une charge partielle à une température intérieure de 20°C et une température extérieure de Tj | | | |
| $T_j$ = – 7°C | Puissance nominale | N/A | kW | $T_j$ = – 7°C | $COP_d$ | N/A | - |
| $T_j$ = + 2°C | $P_{dh}$ | 12.3 | kW | $T_j$ = + 2°C | $COP_d$ | 3.41 | - |
| $T_j$ = + 7°C | $P_{dh}$ | 8.0 | kW | $T_j$ = + 7°C | $COP_d$ | 5.61 | - |
| $T_j$ = + 12°C | $P_{dh}$ | 4.2 | kW | $T_j$ = + 12°C | $COP_d$ | 7.94 | - |
| $T_j$ = température bivalente | $P_{dh}$ | 8.0 | kW | $T_j$ = température bivalente | $COP_d$ | 5.61 | - |
| $T_j$ = température limite d'exploitation | $P_{dh}$ | 12.3 | kW | $T_j$ = température limite d'exploitation | $COP_d$ | 3.41 | - |
| Pour les pompes à chaleur air-eau : Tj = -15°C (si TOL < -20°C) | $P_{dh}$ | N/A | kW | Pour les pompes à chaleur air-eau : Tj = -15°C (si TOL < -20°C) | $COP_d$ | N/A | - |
| Température bivalente | $T_{biv}$ | 7 | °C | Pour les pompes à chaleur air-eau : température limite d'exploitation | TOL | 2 | °C |
| Capacité de cycle pour le chauffage | $P_{cych}$ | N/A | kW | Efficacité de l'intervalle de cycle | $COP_{cyc}$ | N/A | - |
| Coefficient de dégradation (**) | $C_{dh}$ | 0.9 | kW | Température limite de fonctionnement de l'eau de chauffage | WTOL | 65 | °C |
| Consommation électrique en dehors du mode actif | | | | Chauffage d'appoint | | | |
| Mode hors tension | $P_{OFF}$ | 0.010 | kW | | | | |
| Mode thermostat éteint | $P_{TO}$ | 0.010 | kW | Puissance thermique nominale (**) | $p_{sup}$ | 0.0 | KW |
| Mode veille | $P_{SB}$ | 0.010 | kW | Type d'entrée d'énergie | Électrique | | |
| Mode chauffage du carter | $P_{CK}$ | 0.000 | kW | | | | |

| **Autre articles** | | | | | | | |
|---|---|---|---|---|---|---|---|
| Contrôle de la capacité | variables | | | Pour les pompes à chaleur air-eau : Débit d'air nominal, à l'extérieur | - | 5500 | $m^3/h$ |
| Niveau de puissance sonore, intérieur/extérieur | $L_{WA}$ | -/66 | dB | Pour les pompes à chaleur eau-eau ou eau saumure-eau : Débit d'eau ou de fluide caloporteur nominal, échangeur de chaleur extérieur | - | N/A | $m^3/h$ |
| Consommation annuelle d'énergie | $Q_{HE}$ | 2638 | kWh | | | | |
| Pour un chauffe-eau combiné avec pompe à chaleur : | | | | | | | |
| **Profil de charge déclaré** | N/A | | | **Efficacité énergétique pour le chauffage de l'eau** | $\eta_{wh}$ | N/A | % |
| Consommation quotidienne d'électricité | $Q_{elec}$ | N/A | kWh | Consommation quotidienne de combustible | $Q_{fuel}$ | N/A | kWh |
| Consommation annuelle d'électricité | AEC | N/A | kWh | Consommation annuelle de combustible | AFC | N/A | GJ |
| Détails de contact | Consultez la couverture arrière du manuel. | | | | | | |

(*) Pour les chauffe-eau thermodynamiques et les chauffe-eau combinés thermodynamiques, la puissance thermique nominale est égale à la charge de conception pour le chauffage, et la puissance thermique nominale d'un chauffage d'appoint est égale à la capacité d'appoint pour le chauffage sup(Tj). (**) Si Cdh n'est pas déterminé par mesure, alors le coefficient de dégradation par défaut est Cdh = 0,9.

# Paramètres techniques

| | |
|---|---|
| Modèle(s): | 3 - PH 14kw (chauffage 9kw); 3 - PH 14kw (chauffage 6kw); 3 - PH 14kw (chauffage 3kW); 3 - PH 14kw |
| Pompe à chaleur air-eau | oui |
| Pompe à chaleur eau-eau | non |
| Pompe à chaleur eau glycolée-eau | non |
| Pompe à chaleur basse température | non |
| Équipée d'une résistance de chauffage supplémentaire | Oui (pour 3 - PH 14kw (chauffage 9kw); 3 - PH 14kw (chauffage 6kw); 3 - PH 14kw (chauffage 3kW)) Aucun (pour 3 - PH 14kw) |
| Chauffe-eau combiné avec pompe à chaleur | non |
| Conditions climatiques déclarées ; | plus chaud |

Les paramètres sont déclarés pour une application moyenne température.

| Article | Symbol | Valeur | Unité | Article | Symbol | Valeur | Unité |
|---|---|---|---|---|---|---|---|
| **Puissance thermique nominale(*)** | Puissance nominale | 14 | kW | **Efficacité énergétique saisonnière du chauffage de l'espace** | $\eta_s$ | 170 | % |
| Capacité déclarée pour le chauffage en charge partielle à une température intérieure de 20 °C et une température extérieure de Tj | | | | Capacité déclarée de chauffage pour une charge partielle à une température intérieure de 20°C et une température extérieure de Tj | | | |
| $T_j$ = – 7°C | Puissance nominale | N/A | kW | $T_j$ = – 7°C | $COP_d$ | N/A | - |
| $T_j$ = + 2°C | $P_{dh}$ | 13.1 | kW | $T_j$ = + 2°C | $COP_d$ | 2.25 | - |
| $T_j$ = + 7°C | $P_{dh}$ | 9.0 | kW | $T_j$ = + 7°C | $COP_d$ | 3.61 | - |
| $T_j$ = + 12°C | $P_{dh}$ | 4.1 | kW | $T_j$ = + 12°C | $COP_d$ | 5.94 | - |
| $T_j$ = température bivalente | $P_{dh}$ | 9.0 | kW | $T_j$ = température bivalente | $COP_d$ | 3.61 | - |
| $T_j$ = température limite d'exploitation | $P_{dh}$ | 13.1 | kW | $T_j$ = température limite d'exploitation | $COP_d$ | 2.25 | - |
| Pour les pompes à chaleur air-eau : Tj = -15°C (si TOL < -20°C) | $P_{dh}$ | N/A | kW | Pour les pompes à chaleur air-eau : Tj = -15°C (si TOL < -20°C) | $COP_d$ | N/A | - |
| Température bivalente | $T_{biv}$ | 7 | °C | Pour les pompes à chaleur air-eau : température limite d'exploitation | TOL | 2 | °C |
| Capacité de cycle pour le chauffage | $P_{cych}$ | N/A | kW | Efficacité de l'intervalle de cycle | $COP_{cyc}$ | N/A | - |
| Coefficient de dégradation (**) | $C_{dh}$ | 0.9 | kW | Température limite de fonctionnement de l'eau de chauffage | WTOL | 65 | °C |
| Consommation électrique en dehors du mode actif | | | | Chauffage d'appoint | | | |
| Mode hors tension | $P_{OFF}$ | 0.010 | kW | | | | |
| Mode thermostat éteint | $P_{TO}$ | 0.010 | kW | Puissance thermique nominale (**) | $p_{sup}$ | 0.0 | KW |
| Mode veille | $P_{SB}$ | 0.010 | kW | Type d'entrée d'énergie | Électrique | | |
| Mode chauffage du carter | $P_{CK}$ | 0.000 | kW | | | | |

| **Autre articles** | | | | | | | |
|---|---|---|---|---|---|---|---|
| Contrôle de la capacité | variables | | | Pour les pompes à chaleur air-eau : Débit d'air nominal, à l'extérieur | - | 5500 | $m^3/h$ |
| Niveau de puissance sonore, intérieur/extérieur | $L_{WA}$ | -/66 | dB | Pour les pompes à chaleur eau-eau ou eau saumure-eau : Débit d'eau ou de fluide caloporteur nominal, échangeur de chaleur extérieur | - | N/A | $m^3/h$ |
| Consommation annuelle d'énergie | $Q_{HE}$ | 4320 | kWh | | | | |
| Pour un chauffe-eau combiné avec pompe à chaleur : | | | | | | | |
| **Profil de charge déclaré** | N/A | | | **Efficacité énergétique pour le chauffage de l'eau** | $\eta_{wh}$ | N/A | % |
| Consommation quotidienne d'électricité | $Q_{elec}$ | N/A | kWh | Consommation quotidienne de combustible | $Q_{fuel}$ | N/A | kWh |
| Consommation annuelle d'électricité | AEC | N/A | kWh | Consommation annuelle de combustible | AFC | N/A | GJ |
| Détails de contact | Consultez la couverture arrière du manuel. | | | | | | |

(*) Pour les chauffe-eau thermodynamiques et les chauffe-eau combinés thermodynamiques, la puissance thermique nominale est égale à la charge de conception pour le chauffage, et la puissance thermique nominale d'un chauffage d'appoint est égale à la capacité d'appoint pour le chauffage sup(Tj). (**) Si Cdh n'est pas déterminé par mesure, alors le coefficient de dégradation par défaut est Cdh = 0,9.

# Paramètres techniques

| | |
|---|---|
| Modèle(s): | 3 - PH 14kw (chauffage 9kw); 3 - PH 14kw (chauffage 6kw); 3 - PH 14kw (chauffage 3kW); 3 - PH 14kw |
| Pompe à chaleur air-eau | oui |
| Pompe à chaleur eau-eau | non |
| Pompe à chaleur eau glycolée-eau | non |
| Pompe à chaleur basse température | non |
| Équipée d'une résistance de chauffage supplémentaire | Oui (pour 3 - PH 14kw (chauffage 9kw); 3 - PH 14kw (chauffage 6kw); 3 - PH 14kw (chauffage 3kW)) Aucun (pour 3 - PH 14kw) |
| Chauffe-eau combiné avec pompe à chaleur | non |
| Conditions climatiques déclarées ; | plus froid |

Les paramètres sont déclarés pour une application moyenne température.

| Article | Symbol | Valeur | Unité | Article | Symbol | Valeur | Unité |
|---|---|---|---|---|---|---|---|
| **Puissance thermique nominale(*)** | Puissance nominale | 11 | kW | **Efficacité énergétique saisonnière du chauffage de l'espace** | $\eta_s$ | 117 | % |
| Capacité déclarée pour le chauffage en charge partielle à une température intérieure de 20 °C et une température extérieure de Tj | | | | Capacité déclarée de chauffage pour une charge partielle à une température intérieure de 20°C et une température extérieure de Tj | | | |
| $T_j$ = – 7°C | Puissance nominale | 7.2 | kW | $T_j$ = – 7°C | $COP_d$ | 2.56 | - |
| $T_j$ = + 2°C | $P_{dh}$ | 4.3 | kW | $T_j$ = + 2°C | $COP_d$ | 3.62 | - |
| $T_j$ = + 7°C | $P_{dh}$ | 3.1 | kW | $T_j$ = + 7°C | $COP_d$ | 4.77 | - |
| $T_j$ = + 12°C | $P_{dh}$ | 3.6 | kW | $T_j$ = + 12°C | $COP_d$ | 6.40 | - |
| $T_j$ = température bivalente | $P_{dh}$ | 8.9 | kW | $T_j$ = température bivalente | $COP_d$ | 1.82 | - |
| $T_j$ = température limite d'exploitation | $P_{dh}$ | 4.4 | kW | $T_j$ = température limite d'exploitation | $COP_d$ | 1.16 | - |
| Pour les pompes à chaleur air-eau : Tj = -15°C (si TOL < -20°C) | $P_{dh}$ | N/A | kW | Pour les pompes à chaleur air-eau : Tj = -15°C (si TOL < -20°C) | $COP_d$ | N/A | - |
| Température bivalente | $T_{biv}$ | -15 | °C | Pour les pompes à chaleur air-eau : température limite d'exploitation | TOL | -22 | °C |
| Capacité de cycle pour le chauffage | $P_{cych}$ | N/A | kW | Efficacité de l'intervalle de cycle | $COP_{cyc}$ | N/A | - |
| Coefficient de dégradation (**) | $C_{dh}$ | 0.9 | kW | Température limite de fonctionnement de l'eau de chauffage | WTOL | 65 | °C |
| Consommation électrique en dehors du mode actif | | | | Chauffage d'appoint | | | |
| Mode hors tension | $P_{OFF}$ | 0.010 | kW | | | | |
| Mode thermostat éteint | $P_{TO}$ | 0.010 | kW | Puissance thermique nominale (**) | $p_{sup}$ | 6.6 | KW |
| Mode veille | $P_{SB}$ | 0.010 | kW | Type d'entrée d'énergie | Électrique | | |
| Mode chauffage du carter | $P_{CK}$ | 0.000 | kW | | | | |

| **Autre articles** | | | | | | | |
|---|---|---|---|---|---|---|---|
| Contrôle de la capacité | variables | | | Pour les pompes à chaleur air-eau : Débit d'air nominal, à l'extérieur | - | 5500 | $m^3/h$ |
| Niveau de puissance sonore, intérieur/extérieur | $L_{WA}$ | -/66 | dB | Pour les pompes à chaleur eau-eau ou eau saumure-eau : Débit d'eau ou de fluide caloporteur nominal, échangeur de chaleur extérieur | - | N/A | $m^3/h$ |
| Consommation annuelle d'énergie | $Q_{HE}$ | 8967 | kWh | | | | |
| Pour un chauffe-eau combiné avec pompe à chaleur : | | | | | | | |
| **Profil de charge déclaré** | N/A | | | **Efficacité énergétique pour le chauffage de l'eau** | $\eta_{wh}$ | N/A | % |
| Consommation quotidienne d'électricité | $Q_{elec}$ | N/A | kWh | Consommation quotidienne de combustible | $Q_{fuel}$ | N/A | kWh |
| Consommation annuelle d'électricité | AEC | N/A | kWh | Consommation annuelle de combustible | AFC | N/A | GJ |
| Détails de contact | Consultez la couverture arrière du manuel. | | | | | | |

(*) Pour les chauffe-eau thermodynamiques et les chauffe-eau combinés thermodynamiques, la puissance thermique nominale est égale à la charge de conception pour le chauffage, et la puissance thermique nominale d'un chauffage d'appoint est égale à la capacité d'appoint pour le chauffage sup(Tj). (**) Si Cdh n'est pas déterminé par mesure, alors le coefficient de dégradation par défaut est Cdh = 0,9.

# Paramètres techniques

| | |
|---|---|
| Modèle(s): | 3 - PH 16kw (chauffage 9kw); 3 - PH 16kw (chauffage 6kw); 3 - PH 16kw (chauffage 3kW); 3 - PH 16kw |
| Pompe à chaleur air-eau | oui |
| Pompe à chaleur eau-eau | non |
| Pompe à chaleur eau glycolée-eau | non |
| Pompe à chaleur basse température | non |
| Équipée d'une résistance de chauffage supplémentaire | Oui (pour 3 - PH 16kw (chauffage 9kw); 3 - PH 16kw (chauffage 6kw); 3 - PH 16kw (chauffage 3kW)) Aucun (pour 3 - PH 16kw) |
| Chauffe-eau combiné avec pompe à chaleur | non |
| Conditions climatiques déclarées ; | Moyen |

Les paramètres sont déclarés pour une application basse température;

| Article | Symbol | Valeur | Unité | Article | Symbol | Valeur | Unité |
|---|---|---|---|---|---|---|---|
| **Puissance thermique nominale(*)** | Puissance nominale | 15 | kW | **Efficacité énergétique saisonnière du chauffage de l'espace** | $\eta_s$ | 179 | % |
| Capacité déclarée pour le chauffage en charge partielle à une température intérieure de 20 °C et une température extérieure de Tj | | | | Capacité déclarée de chauffage pour une charge partielle à une température intérieure de 20°C et une température extérieure de Tj | | | |
| $T_j$ = – 7°C | Puissance nominale | 13.4 | kW | $T_j$ = – 7°C | $COP_d$ | 2.60 | - |
| $T_j$ = + 2°C | $P_{dh}$ | 8.0 | kW | $T_j$ = + 2°C | $COP_d$ | 4.39 | - |
| $T_j$ = + 7°C | $P_{dh}$ | 5.4 | kW | $T_j$ = + 7°C | $COP_d$ | 6.44 | - |
| $T_j$ = + 12°C | $P_{dh}$ | 4.6 | kW | $T_j$ = + 12°C | $COP_d$ | 8.92 | - |
| $T_j$ = température bivalente | $P_{dh}$ | 13.4 | kW | $T_j$ = température bivalente | $COP_d$ | 2.60 | - |
| $T_j$ = température limite d'exploitation | $P_{dh}$ | 13.4 | kW | $T_j$ = température limite d'exploitation | $COP_d$ | 2.44 | - |
| Pour les pompes à chaleur air-eau : Tj = -15°C (si TOL < -20°C) | $P_{dh}$ | N/A | kW | Pour les pompes à chaleur air-eau : Tj = -15°C (si TOL < -20°C) | $COP_d$ | N/A | - |
| Température bivalente | $T_{biv}$ | -7 | °C | Pour les pompes à chaleur air-eau : température limite d'exploitation | TOL | -10 | °C |
| Capacité de cycle pour le chauffage | $P_{cych}$ | N/A | kW | Efficacité de l'intervalle de cycle | $COP_{cyc}$ | N/A | - |
| Coefficient de dégradation (**) | $C_{dh}$ | 0.9 | kW | Température limite de fonctionnement de l'eau de chauffage | WTOL | 65 | °C |
| Consommation électrique en dehors du mode actif | | | | Chauffage d'appoint | | | |
| Mode hors tension | $P_{OFF}$ | 0.010 | kW | | | | |
| Mode thermostat éteint | $P_{TO}$ | 0.010 | kW | Puissance thermique nominale (**) | $p_{sup}$ | 1.6 | KW |
| Mode veille | $P_{SB}$ | 0.010 | kW | Type d'entrée d'énergie | Électrique | | |
| Mode chauffage du carter | $P_{CK}$ | 0.000 | kW | | | | |

| **Autre articles** | | | | | | | |
|---|---|---|---|---|---|---|---|
| Contrôle de la capacité | variables | | | Pour les pompes à chaleur air-eau : Débit d'air nominal, à l'extérieur | - | 6000 | $m^3/h$ |
| Niveau de puissance sonore, intérieur/extérieur | $L_{WA}$ | -/68 | dB | Pour les pompes à chaleur eau-eau ou eau saumure-eau : Débit d'eau ou de fluide caloporteur nominal, échangeur de chaleur extérieur | - | N/A | $m^3/h$ |
| Consommation annuelle d'énergie | $Q_{HE}$ | 6838 | kWh | | | | |
| Pour un chauffe-eau combiné avec pompe à chaleur : | | | | | | | |
| **Profil de charge déclaré** | N/A | | | **Efficacité énergétique pour le chauffage de l'eau** | $\eta_{wh}$ | N/A | % |
| Consommation quotidienne d'électricité | $Q_{elec}$ | N/A | kWh | Consommation quotidienne de combustible | $Q_{fuel}$ | N/A | kWh |
| Consommation annuelle d'électricité | AEC | N/A | kWh | Consommation annuelle de combustible | AFC | N/A | GJ |
| Détails de contact | Consultez la couverture arrière du manuel. | | | | | | |

(*) Pour les chauffe-eau thermodynamiques et les chauffe-eau combinés thermodynamiques, la puissance thermique nominale est égale à la charge de conception pour le chauffage, et la puissance thermique nominale d'un chauffage d'appoint est égale à la capacité d'appoint pour le chauffage sup(Tj). (**) Si Cdh n'est pas déterminé par mesure, alors le coefficient de dégradation par défaut est Cdh = 0,9.

# Paramètres techniques

| | |
|---|---|
| Modèle(s): | 3 - PH 16kw (chauffage 9kw); 3 - PH 16kw (chauffage 6kw); 3 - PH 16kw (chauffage 3kW); 3 - PH 16kw |
| Pompe à chaleur air-eau | oui |
| Pompe à chaleur eau-eau | non |
| Pompe à chaleur eau glycolée-eau | non |
| Pompe à chaleur basse température | non |
| Équipée d'une résistance de chauffage supplémentaire | Oui (pour 3 - PH 16kw (chauffage 9kw); 3 - PH 16kw (chauffage 6kw); 3 - PH 16kw (chauffage 3kW)) Aucun (pour 3 - PH 16kw) |
| Chauffe-eau combiné avec pompe à chaleur | non |
| Conditions climatiques déclarées ; | plus chaud |

Les paramètres sont déclarés pour une application basse température;

| Article | Symbol | Valeur | Unité | Article | Symbol | Valeur | Unité |
|---|---|---|---|---|---|---|---|
| **Puissance thermique nominale(*)** | Puissance nominale | 13 | kW | **Efficacité énergétique saisonnière du chauffage de l'espace** | $\eta_s$ | 239 | % |
| Capacité déclarée pour le chauffage en charge partielle à une température intérieure de 20 °C et une température extérieure de Tj | | | | Capacité déclarée de chauffage pour une charge partielle à une température intérieure de 20°C et une température extérieure de Tj | | | |
| $T_j$ = – 7°C | Puissance nominale | N/A | kW | $T_j$ = – 7°C | $COP_d$ | N/A | - |
| $T_j$ = + 2°C | $P_{dh}$ | 13.3 | kW | $T_j$ = + 2°C | $COP_d$ | 3.33 | - |
| $T_j$ = + 7°C | $P_{dh}$ | 8.6 | kW | $T_j$ = + 7°C | $COP_d$ | 5.20 | - |
| $T_j$ = + 12°C | $P_{dh}$ | 4.8 | kW | $T_j$ = + 12°C | $COP_d$ | 7.95 | - |
| $T_j$ = température bivalente | $P_{dh}$ | 8.6 | kW | $T_j$ = température bivalente | $COP_d$ | 5.20 | - |
| $T_j$ = température limite d'exploitation | $P_{dh}$ | 13.3 | kW | $T_j$ = température limite d'exploitation | $COP_d$ | 3.33 | - |
| Pour les pompes à chaleur air-eau : Tj = -15°C (si TOL < -20°C) | $P_{dh}$ | N/A | kW | Pour les pompes à chaleur air-eau : Tj = -15°C (si TOL < -20°C) | $COP_d$ | N/A | - |
| Température bivalente | $T_{biv}$ | 7 | °C | Pour les pompes à chaleur air-eau : température limite d'exploitation | TOL | 2 | °C |
| Capacité de cycle pour le chauffage | $P_{cych}$ | N/A | kW | Efficacité de l'intervalle de cycle | $COP_{cyc}$ | N/A | - |
| Coefficient de dégradation (**) | $C_{dh}$ | 0.9 | kW | Température limite de fonctionnement de l'eau de chauffage | WTOL | 65 | °C |
| Consommation électrique en dehors du mode actif | | | | Chauffage d'appoint | | | |
| Mode hors tension | $P_{OFF}$ | 0.010 | kW | | | | |
| Mode thermostat éteint | $P_{TO}$ | 0.010 | kW | Puissance thermique nominale (**) | $p_{sup}$ | 0.0 | KW |
| Mode veille | $P_{SB}$ | 0.010 | kW | Type d'entrée d'énergie | Électrique | | |
| Mode chauffage du carter | $P_{CK}$ | 0.000 | kW | | | | |

| **Autre articles** | | | | | | | |
|---|---|---|---|---|---|---|---|
| Contrôle de la capacité | variables | | | Pour les pompes à chaleur air-eau : Débit d'air nominal, à l'extérieur | - | 6000 | $m^3/h$ |
| Niveau de puissance sonore, intérieur/extérieur | $L_{WA}$ | -/68 | dB | Pour les pompes à chaleur eau-eau ou eau saumure-eau : Débit d'eau ou de fluide caloporteur nominal, échangeur de chaleur extérieur | - | N/A | $m^3/h$ |
| Consommation annuelle d'énergie | $Q_{HE}$ | 2933 | kWh | | | | |
| Pour un chauffe-eau combiné avec pompe à chaleur : | | | | | | | |
| **Profil de charge déclaré** | N/A | | | **Efficacité énergétique pour le chauffage de l'eau** | $\eta_{wh}$ | N/A | % |
| Consommation quotidienne d'électricité | $Q_{elec}$ | N/A | kWh | Consommation quotidienne de combustible | $Q_{fuel}$ | N/A | kWh |
| Consommation annuelle d'électricité | AEC | N/A | kWh | Consommation annuelle de combustible | AFC | N/A | GJ |
| Détails de contact | Consultez la couverture arrière du manuel. | | | | | | |

(*) Pour les chauffe-eau thermodynamiques et les chauffe-eau combinés thermodynamiques, la puissance thermique nominale est égale à la charge de conception pour le chauffage, et la puissance thermique nominale d'un chauffage d'appoint est égale à la capacité d'appoint pour le chauffage sup(Tj). (**) Si Cdh n'est pas déterminé par mesure, alors le coefficient de dégradation par défaut est Cdh = 0,9.

# Paramètres techniques

| | |
|---|---|
| Modèle(s): | 3 - PH 16kw (chauffage 9kw); 3 - PH 16kw (chauffage 6kw); 3 - PH 16kw (chauffage 3kW); 3 - PH 16kw |
| Pompe à chaleur air-eau | oui |
| Pompe à chaleur eau-eau | non |
| Pompe à chaleur eau glycolée-eau | non |
| Pompe à chaleur basse température | non |
| Équipée d'une résistance de chauffage supplémentaire | Oui (pour 3 - PH 16kw (chauffage 9kw); 3 - PH 16kw (chauffage 6kw); 3 - PH 16kw (chauffage 3kW)) Aucun (pour 3 - PH 16kw) |
| Chauffe-eau combiné avec pompe à chaleur | non |
| Conditions climatiques déclarées ; | plus froid |

Les paramètres sont déclarés pour une application basse température;

| Article | Symbol | Valeur | Unité | Article | Symbol | Valeur | Unité |
|---|---|---|---|---|---|---|---|
| **Puissance thermique nominale(*)** | Puissance nominale | 14 | kW | **Efficacité énergétique saisonnière du chauffage de l'espace** | $\eta_s$ | 156 | % |
| Capacité déclarée pour le chauffage en charge partielle à une température intérieure de 20 °C et une température extérieure de Tj | | | | Capacité déclarée de chauffage pour une charge partielle à une température intérieure de 20°C et une température extérieure de Tj | | | |
| $T_j$ = – 7°C | Puissance nominale | 9.1 | kW | $T_j$ = – 7°C | $COP_d$ | 3.32 | - |
| $T_j$ = + 2°C | $P_{dh}$ | 5.0 | kW | $T_j$ = + 2°C | $COP_d$ | 4.88 | - |
| $T_j$ = + 7°C | $P_{dh}$ | 4.2 | kW | $T_j$ = + 7°C | $COP_d$ | 6.50 | - |
| $T_j$ = + 12°C | $P_{dh}$ | 3.7 | kW | $T_j$ = + 12°C | $COP_d$ | 7.59 | - |
| $T_j$ = température bivalente | $P_{dh}$ | 11.3 | kW | $T_j$ = température bivalente | $COP_d$ | 2.28 | - |
| $T_j$ = température limite d'exploitation | $P_{dh}$ | 9.8 | kW | $T_j$ = température limite d'exploitation | $COP_d$ | 1.89 | - |
| Pour les pompes à chaleur air-eau : Tj = -15°C (si TOL < -20°C) | $P_{dh}$ | N/A | kW | Pour les pompes à chaleur air-eau : Tj = -15°C (si TOL < -20°C) | $COP_d$ | N/A | - |
| Température bivalente | $T_{biv}$ | -15 | °C | Pour les pompes à chaleur air-eau : température limite d'exploitation | TOL | -22 | °C |
| Capacité de cycle pour le chauffage | $P_{cych}$ | N/A | kW | Efficacité de l'intervalle de cycle | $COP_{cyc}$ | N/A | - |
| Coefficient de dégradation (**) | $C_{dh}$ | 0.9 | kW | Température limite de fonctionnement de l'eau de chauffage | WTOL | 65 | °C |
| Consommation électrique en dehors du mode actif | | | | Chauffage d'appoint | | | |
| Mode hors tension | $P_{OFF}$ | 0.010 | kW | | | | |
| Mode thermostat éteint | $P_{TO}$ | 0.010 | kW | Puissance thermique nominale (**) | $p_{sup}$ | 4.2 | KW |
| Mode veille | $P_{SB}$ | 0.010 | kW | Type d'entrée d'énergie | Électrique | | |
| Mode chauffage du carter | $P_{CK}$ | 0.000 | kW | | | | |

| **Autre articles** | | | | | | | |
|---|---|---|---|---|---|---|---|
| Contrôle de la capacité | variables | | | Pour les pompes à chaleur air-eau : Débit d'air nominal, à l'extérieur | - | 6000 | $m^3/h$ |
| Niveau de puissance sonore, intérieur/extérieur | $L_{WA}$ | -/68 | dB | Pour les pompes à chaleur eau-eau ou eau saumure-eau : Débit d'eau ou de fluide caloporteur nominal, échangeur de chaleur extérieur | - | N/A | $m^3/h$ |
| Consommation annuelle d'énergie | $Q_{HE}$ | 8597 | kWh | | | | |
| Pour un chauffe-eau combiné avec pompe à chaleur : | | | | | | | |
| **Profil de charge déclaré** | N/A | | | **Efficacité énergétique pour le chauffage de l'eau** | $\eta_{wh}$ | N/A | % |
| Consommation quotidienne d'électricité | $Q_{elec}$ | N/A | kWh | Consommation quotidienne de combustible | $Q_{fuel}$ | N/A | kWh |
| Consommation annuelle d'électricité | AEC | N/A | kWh | Consommation annuelle de combustible | AFC | N/A | GJ |
| Détails de contact | Consultez la couverture arrière du manuel. | | | | | | |

(*) Pour les chauffe-eau thermodynamiques et les chauffe-eau combinés thermodynamiques, la puissance thermique nominale est égale à la charge de conception pour le chauffage, et la puissance thermique nominale d'un chauffage d'appoint est égale à la capacité d'appoint pour le chauffage sup(Tj). (**) Si Cdh n'est pas déterminé par mesure, alors le coefficient de dégradation par défaut est Cdh = 0,9.

# Paramètres techniques

| | |
|---|---|
| Modèle(s): | 3 - PH 16kw (chauffage 9kw); 3 - PH 16kw (chauffage 6kw); 3 - PH 16kw (chauffage 3kW); 3 - PH 16kw |
| Pompe à chaleur air-eau | oui |
| Pompe à chaleur eau-eau | non |
| Pompe à chaleur eau glycolée-eau | non |
| Pompe à chaleur basse température | non |
| Équipée d'une résistance de chauffage supplémentaire | Oui (pour 3 - PH 16kw (chauffage 9kw); 3 - PH 16kw (chauffage 6kw); 3 - PH 16kw (chauffage 3kW)) Aucun (pour 3 - PH 16kw) |
| Chauffe-eau combiné avec pompe à chaleur | non |
| Conditions climatiques déclarées ; | Moyen |

Les paramètres sont déclarés pour une application moyenne température.

| Article | Symbol | Valeur | Unité | Article | Symbol | Valeur | Unité |
|---|---|---|---|---|---|---|---|
| **Puissance thermique nominale(*)** | Puissance nominale | 13 | kW | **Efficacité énergétique saisonnière du chauffage de l'espace** | $\eta_s$ | 136 | % |
| Capacité déclarée pour le chauffage en charge partielle à une température intérieure de 20 °C et une température extérieure de Tj | | | | Capacité déclarée de chauffage pour une charge partielle à une température intérieure de 20°C et une température extérieure de Tj | | | |
| $T_j$ = – 7°C | Puissance nominale | 11.3 | kW | $T_j$ = – 7°C | $COP_d$ | 2.04 | - |
| $T_j$ = + 2°C | $P_{dh}$ | 7.3 | kW | $T_j$ = + 2°C | $COP_d$ | 3.33 | - |
| $T_j$ = + 7°C | $P_{dh}$ | 4.8 | kW | $T_j$ = + 7°C | $COP_d$ | 4.81 | - |
| $T_j$ = + 12°C | $P_{dh}$ | 4.0 | kW | $T_j$ = + 12°C | $COP_d$ | 7.36 | - |
| $T_j$ = température bivalente | $P_{dh}$ | 11.3 | kW | $T_j$ = température bivalente | $COP_d$ | 2.04 | - |
| $T_j$ = température limite d'exploitation | $P_{dh}$ | 11.3 | kW | $T_j$ = température limite d'exploitation | $COP_d$ | 1.78 | - |
| Pour les pompes à chaleur air-eau : Tj = -15°C (si TOL < -20°C) | $P_{dh}$ | N/A | kW | Pour les pompes à chaleur air-eau : Tj = -15°C (si TOL < -20°C) | $COP_d$ | N/A | - |
| Température bivalente | $T_{biv}$ | -7 | °C | Pour les pompes à chaleur air-eau : température limite d'exploitation | TOL | -10 | °C |
| Capacité de cycle pour le chauffage | $P_{cych}$ | N/A | kW | Efficacité de l'intervalle de cycle | $COP_{cyc}$ | N/A | - |
| Coefficient de dégradation (**) | $C_{dh}$ | 0.9 | kW | Température limite de fonctionnement de l'eau de chauffage | WTOL | 65 | °C |
| Consommation électrique en dehors du mode actif | | | | Chauffage d'appoint | | | |
| Mode hors tension | $P_{OFF}$ | 0.010 | kW | | | | |
| Mode thermostat éteint | $P_{TO}$ | 0.010 | kW | Puissance thermique nominale (**) | $p_{sup}$ | 1.7 | KW |
| Mode veille | $P_{SB}$ | 0.010 | kW | Type d'entrée d'énergie | Électrique | | |
| Mode chauffage du carter | $P_{CK}$ | 0.000 | kW | | | | |

| **Autre articles** | | | | | | | |
|---|---|---|---|---|---|---|---|
| Contrôle de la capacité | variables | | | Pour les pompes à chaleur air-eau : Débit d'air nominal, à l'extérieur | - | 6000 | $m^3/h$ |
| Niveau de puissance sonore, intérieur/extérieur | $L_{WA}$ | -/68 | dB | Pour les pompes à chaleur eau-eau ou eau saumure-eau : Débit d'eau ou de fluide caloporteur nominal, échangeur de chaleur extérieur | - | N/A | $m^3/h$ |
| Consommation annuelle d'énergie | $Q_{HE}$ | 7571 | kWh | | | | |
| Pour un chauffe-eau combiné avec pompe à chaleur : | | | | | | | |
| **Profil de charge déclaré** | N/A | | | **Efficacité énergétique pour le chauffage de l'eau** | $\eta_{wh}$ | N/A | % |
| Consommation quotidienne d'électricité | $Q_{elec}$ | N/A | kWh | Consommation quotidienne de combustible | $Q_{fuel}$ | N/A | kWh |
| Consommation annuelle d'électricité | AEC | N/A | kWh | Consommation annuelle de combustible | AFC | N/A | GJ |
| Détails de contact | Consultez la couverture arrière du manuel. | | | | | | |

(*) Pour les chauffe-eau thermodynamiques et les chauffe-eau combinés thermodynamiques, la puissance thermique nominale est égale à la charge de conception pour le chauffage, et la puissance thermique nominale d'un chauffage d'appoint est égale à la capacité d'appoint pour le chauffage sup(Tj). (**) Si Cdh n'est pas déterminé par mesure, alors le coefficient de dégradation par défaut est Cdh = 0,9.

# Paramètres techniques

| | |
|---|---|
| Modèle(s): | 3 - PH 16kw (chauffage 9kw); 3 - PH 16kw (chauffage 6kw); 3 - PH 16kw (chauffage 3kW); 3 - PH 16kw |
| Pompe à chaleur air-eau | oui |
| Pompe à chaleur eau-eau | non |
| Pompe à chaleur eau glycolée-eau | non |
| Pompe à chaleur basse température | non |
| Équipée d'une résistance de chauffage supplémentaire | Oui (pour 3 - PH 16kw (chauffage 9kw); 3 - PH 16kw (chauffage 6kw); 3 - PH 16kw (chauffage 3kW)) Aucun (pour 3 - PH 16kw) |
| Chauffe-eau combiné avec pompe à chaleur | non |
| Conditions climatiques déclarées ; | plus chaud |

Les paramètres sont déclarés pour une application moyenne température.

| Article | Symbol | Valeur | Unité | Article | Symbol | Valeur | Unité |
|---|---|---|---|---|---|---|---|
| **Puissance thermique nominale(*)** | Puissance nominale | 14 | kW | **Efficacité énergétique saisonnière du chauffage de l'espace** | $\eta_s$ | 171 | % |
| Capacité déclarée pour le chauffage en charge partielle à une température intérieure de 20 °C et une température extérieure de Tj | | | | Capacité déclarée de chauffage pour une charge partielle à une température intérieure de 20°C et une température extérieure de Tj | | | |
| $T_j$ = – 7°C | Puissance nominale | N/A | kW | $T_j$ = – 7°C | $COP_d$ | N/A | - |
| $T_j$ = + 2°C | $P_{dh}$ | 13.2 | kW | $T_j$ = + 2°C | $COP_d$ | 2.32 | - |
| $T_j$ = + 7°C | $P_{dh}$ | 9.1 | kW | $T_j$ = + 7°C | $COP_d$ | 3.70 | - |
| $T_j$ = + 12°C | $P_{dh}$ | 4.1 | kW | $T_j$ = + 12°C | $COP_d$ | 5.80 | - |
| $T_j$ = température bivalente | $P_{dh}$ | 9.1 | kW | $T_j$ = température bivalente | $COP_d$ | 3.70 | - |
| $T_j$ = température limite d'exploitation | $P_{dh}$ | 13.2 | kW | $T_j$ = température limite d'exploitation | $COP_d$ | 2.32 | - |
| Pour les pompes à chaleur air-eau : Tj = -15°C (si TOL < -20°C) | $P_{dh}$ | N/A | kW | Pour les pompes à chaleur air-eau : Tj = -15°C (si TOL < -20°C) | $COP_d$ | N/A | - |
| Température bivalente | $T_{biv}$ | 7 | °C | Pour les pompes à chaleur air-eau : température limite d'exploitation | TOL | 2 | °C |
| Capacité de cycle pour le chauffage | $P_{cych}$ | N/A | kW | Efficacité de l'intervalle de cycle | $COP_{cyc}$ | N/A | - |
| Coefficient de dégradation (**) | $C_{dh}$ | 0.9 | kW | Température limite de fonctionnement de l'eau de chauffage | WTOL | 65 | °C |
| Consommation électrique en dehors du mode actif | | | | Chauffage d'appoint | | | |
| Mode hors tension | $P_{OFF}$ | 0.010 | kW | | | | |
| Mode thermostat éteint | $P_{TO}$ | 0.010 | kW | Puissance thermique nominale (**) | $p_{sup}$ | 0.8 | KW |
| Mode veille | $P_{SB}$ | 0.010 | kW | Type d'entrée d'énergie | Électrique | | |
| Mode chauffage du carter | $P_{CK}$ | 0.000 | kW | | | | |

| **Autre articles** | | | | | | | |
|---|---|---|---|---|---|---|---|
| Contrôle de la capacité | variables | | | Pour les pompes à chaleur air-eau : Débit d'air nominal, à l'extérieur | - | 6000 | $m^3/h$ |
| Niveau de puissance sonore, intérieur/extérieur | $L_{WA}$ | -/68 | dB | Pour les pompes à chaleur eau-eau ou eau saumure-eau : Débit d'eau ou de fluide caloporteur nominal, échangeur de chaleur extérieur | - | N/A | $m^3/h$ |
| Consommation annuelle d'énergie | $Q_{HE}$ | 4321 | kWh | | | | |
| Pour un chauffe-eau combiné avec pompe à chaleur : | | | | | | | |
| **Profil de charge déclaré** | N/A | | | **Efficacité énergétique pour le chauffage de l'eau** | $\eta_{wh}$ | N/A | % |
| Consommation quotidienne d'électricité | $Q_{elec}$ | N/A | kWh | Consommation quotidienne de combustible | $Q_{fuel}$ | N/A | kWh |
| Consommation annuelle d'électricité | AEC | N/A | kWh | Consommation annuelle de combustible | AFC | N/A | GJ |
| Détails de contact | Consultez la couverture arrière du manuel. | | | | | | |

(*) Pour les chauffe-eau thermodynamiques et les chauffe-eau combinés thermodynamiques, la puissance thermique nominale est égale à la charge de conception pour le chauffage, et la puissance thermique nominale d'un chauffage d'appoint est égale à la capacité d'appoint pour le chauffage sup(Tj). (**) Si Cdh n'est pas déterminé par mesure, alors le coefficient de dégradation par défaut est Cdh = 0,9.

# Paramètres techniques

| | |
|---|---|
| Modèle(s): | 3 - PH 16kw (chauffage 9kw); 3 - PH 16kw (chauffage 6kw); 3 - PH 16kw (chauffage 3kW); 3 - PH 16kw |
| Pompe à chaleur air-eau | oui |
| Pompe à chaleur eau-eau | non |
| Pompe à chaleur eau glycolée-eau | non |
| Pompe à chaleur basse température | non |
| Équipée d'une résistance de chauffage supplémentaire | Oui (pour 3 - PH 16kw (chauffage 9kw); 3 - PH 16kw (chauffage 6kw); 3 - PH 16kw (chauffage 3kW)) Aucun (pour 3 - PH 16kw) |
| Chauffe-eau combiné avec pompe à chaleur | non |
| Conditions climatiques déclarées ; | plus froid |

Les paramètres sont déclarés pour une application moyenne température.

| Article | Symbol | Valeur | Unité | Article | Symbol | Valeur | Unité |
|---|---|---|---|---|---|---|---|
| **Puissance thermique nominale(*)** | Puissance nominale | 12 | kW | **Efficacité énergétique saisonnière du chauffage de l'espace** | $\eta_s$ | 121 | % |
| Capacité déclarée pour le chauffage en charge partielle à une température intérieure de 20 °C et une température extérieure de Tj | | | | Capacité déclarée de chauffage pour une charge partielle à une température intérieure de 20°C et une température extérieure de Tj | | | |
| $T_j$ = – 7°C | Puissance nominale | 7.8 | kW | $T_j$ = – 7°C | $COP_d$ | 2.64 | - |
| $T_j$ = + 2°C | $P_{dh}$ | 4.5 | kW | $T_j$ = + 2°C | $COP_d$ | 3.78 | - |
| $T_j$ = + 7°C | $P_{dh}$ | 3.2 | kW | $T_j$ = + 7°C | $COP_d$ | 4.87 | - |
| $T_j$ = + 12°C | $P_{dh}$ | 3.7 | kW | $T_j$ = + 12°C | $COP_d$ | 6.40 | - |
| $T_j$ = température bivalente | $P_{dh}$ | 9.6 | kW | $T_j$ = température bivalente | $COP_d$ | 1.85 | - |
| $T_j$ = température limite d'exploitation | $P_{dh}$ | 5.1 | kW | $T_j$ = température limite d'exploitation | $COP_d$ | 1.04 | - |
| Pour les pompes à chaleur air-eau : Tj = -15°C (si TOL < -20°C) | $P_{dh}$ | N/A | kW | Pour les pompes à chaleur air-eau : Tj = -15°C (si TOL < -20°C) | $COP_d$ | N/A | - |
| Température bivalente | $T_{biv}$ | -15 | °C | Pour les pompes à chaleur air-eau : température limite d'exploitation | TOL | -22 | °C |
| Capacité de cycle pour le chauffage | $P_{cych}$ | N/A | kW | Efficacité de l'intervalle de cycle | $COP_{cyc}$ | N/A | - |
| Coefficient de dégradation (**) | $C_{dh}$ | 0.9 | kW | Température limite de fonctionnement de l'eau de chauffage | WTOL | 65 | °C |
| Consommation électrique en dehors du mode actif | | | | Chauffage d'appoint | | | |
| Mode hors tension | $P_{OFF}$ | 0.010 | kW | | | | |
| Mode thermostat éteint | $P_{TO}$ | 0.010 | kW | Puissance thermique nominale (**) | $p_{sup}$ | 6.9 | KW |
| Mode veille | $P_{SB}$ | 0.010 | kW | Type d'entrée d'énergie | Électrique | | |
| Mode chauffage du carter | $P_{CK}$ | 0.000 | kW | | | | |

| **Autre articles** | | | | | | | |
|---|---|---|---|---|---|---|---|
| Contrôle de la capacité | variables | | | Pour les pompes à chaleur air-eau : Débit d'air nominal, à l'extérieur | - | 6000 | $m^3/h$ |
| Niveau de puissance sonore, intérieur/extérieur | $L_{WA}$ | -/68 | dB | Pour les pompes à chaleur eau-eau ou eau saumure-eau : Débit d'eau ou de fluide caloporteur nominal, échangeur de chaleur extérieur | - | N/A | $m^3/h$ |
| Consommation annuelle d'énergie | $Q_{HE}$ | 9356 | kWh | | | | |
| Pour un chauffe-eau combiné avec pompe à chaleur : | | | | | | | |
| **Profil de charge déclaré** | N/A | | | **Efficacité énergétique pour le chauffage de l'eau** | $\eta_{wh}$ | N/A | % |
| Consommation quotidienne d'électricité | $Q_{elec}$ | N/A | kWh | Consommation quotidienne de combustible | $Q_{fuel}$ | N/A | kWh |
| Consommation annuelle d'électricité | AEC | N/A | kWh | Consommation annuelle de combustible | AFC | N/A | GJ |
| Détails de contact | Consultez la couverture arrière du manuel. | | | | | | |

(*) Pour les chauffe-eau thermodynamiques et les chauffe-eau combinés thermodynamiques, la puissance thermique nominale est égale à la charge de conception pour le chauffage, et la puissance thermique nominale d'un chauffage d'appoint est égale à la capacité d'appoint pour le chauffage sup(Tj). (**) Si Cdh n'est pas déterminé par mesure, alors le coefficient de dégradation par défaut est Cdh = 0,9.

# Exigences en matière d'informations pour les refroidisseurs de confort

| | |
|---|---|
| Modèle(s): | 4kW(chauffage 3kW);4kW |
| Échangeur de chaleur côté extérieur du refroidisseur | Air à eau |
| Échangeur de chaleur côté intérieur du refroidisseur | Eau |
| Type: | Compression de vapeur entraînée par compresseur |
| Entraînement du compresseur | Moteur électrique |

| Article | Symbol | Valeur | Unité | Article | Symbol | Valeur | Unité |
|---|---|---|---|---|---|---|---|
| **Puissance thermique nominale(*)** | Puissance nominale.c | 4.6 | kW | **Efficacité énergétique saisonnière pour le chauffage de l'espace** | $H_{s.c}$ | 216 | % |
| Capacité déclarée de refroidissement pour une charge partielle à la température extérieure donnée Tj. | | | | Rapport de l'efficacité énergétique déclarée pour le refroidissement en charge partielle à une température extérieure donnée $T_j$. | | | |
| $T_j$ = + 35°C | $P_{dc}$ | 4.6 | kW | $T_j$ =+35°C | $EER_d$ | 3.38 | - |
| $T_j$ = + 30°C | $P_{dc}$ | 3.5 | kW | $T_j$ = +30°C | $EER_d$ | 4.60 | - |
| $T_j$ = + 25°C | $P_{dc}$ | 2.2 | kW | $T_j$ = + 25°C | $EER_d$ | 6.23 | - |
| $T_j$ = + 20°C | $P_{dc}$ | 1.0 | kW | $T_j$ = + 20°C | $EER_d$ | 7.69 | - |
| Coefficient de dégradation du refroidisseur (*) | $C_{dc}$ | 0.9 | kW | | | | |
| Consommation d'énergie dans des modes autres que le "mode actif" | | | | | | | |
| Mode hors tension | $P_{OFF}$ | 0.010 | kW | Mode de chauffage du carter | $P_{ck}$ | 0.000 | KW |
| Mode thermostat éteint | $P_{TO}$ | 0.010 | kW | Mode veille | $P_{SB}$ | 0.010 | KW |
| Autres projets | | | | | | | |
| Contrôle de la capacité | Variables | | | **Pour les refroidisseurs de confort air-eau ; débit d'air, mesuré à l'extérieur.** | - | 2600 | $m^3/h$ |
| Niveau de puissance acoustique, à l'intérieur / à l'extérieur | LWA | -/56 | dB | Pour les refroidisseurs eau/glycol-eau ; débit d'eau ou de fluide caloporteur nominal, échangeur de chaleur côté extérieur | - | N/A | $m^3/h$ |
| Émissions d'oxyde d'azote (le cas échéant) | NOx(**) | - | Mg/kwh d'entrée GCV | | | | |
| GWP du fluide frigorigène | - | 675 | Kg $CO_{2\,eq}$ (100 ans) | | | | |
| Conditions de notation standard utilisées | Application à basse température | | | | | | |
| Détails de contact | Consultez la couverture arrière du manuel. | | | | | | |

(**) Si Cdh n'est pas déterminé par mesure, alors le coefficient de dégradation par défaut des refroidisseurs sera de 0,9.
(**)À partir du 26 septembre 2018.

# Exigences en matière d'informations pour les refroidisseurs de confort

| | |
|---|---|
| Modèle(s): | 4kW(chauffage 3kW);4kW |
| Échangeur de chaleur côté extérieur du refroidisseur | Air à eau |
| Échangeur de chaleur côté intérieur du refroidisseur | Eau |
| Type: | Compression de vapeur entraînée par compresseur |
| Entraînement du compresseur | Moteur électrique |

| Article | Symbol | Valeur | Unité | Article | Symbol | Valeur | Unité |
|---|---|---|---|---|---|---|---|
| **Puissance thermique nominale(*)** | Puissance nominale.c | 4.5 | kW | **Efficacité énergétique saisonnière pour le chauffage de l'espace** | $H_{s.c}$ | 305 | % |
| Capacité déclarée de refroidissement pour une charge partielle à la température extérieure donnée Tj. | | | | Rapport de l'efficacité énergétique déclarée pour le refroidissement en charge partielle à une température extérieure donnée $T_j$. | | | |
| $T_j$ = + 35°C | $P_{dc}$ | 4.5 | kW | $T_j$ =+35°C | $EER_d$ | 5.64 | - |
| $T_j$ = + 30°C | $P_{dc}$ | 3.4 | kW | $T_j$ = +30°C | $EER_d$ | 7.47 | - |
| $T_j$ = + 25°C | $P_{dc}$ | 2.3 | kW | $T_j$ = + 25°C | $EER_d$ | 8.97 | - |
| $T_j$ = + 20°C | $P_{dc}$ | 1.0 | kW | $T_j$ = + 20°C | $EER_d$ | 8.81 | - |
| Coefficient de dégradation du refroidisseur (*) | $C_{dc}$ | 0.9 | kW | | | | |
| Consommation d'énergie dans des modes autres que le "mode actif" | | | | | | | |
| Mode hors tension | $P_{OFF}$ | 0.010 | kW | Mode de chauffage du carter | $P_{ck}$ | 0.000 | KW |
| Mode thermostat éteint | $P_{TO}$ | 0.010 | kW | Mode veille | $P_{SB}$ | 0.010 | KW |
| Autres projets | | | | | | | |
| Contrôle de la capacité | Variables | | | **Pour les refroidisseurs de confort air-eau ; débit d'air, mesuré à l'extérieur.** | - | 2600 | $m^3/h$ |
| Niveau de puissance acoustique, à l'intérieur / à l'extérieur | LWA | -/56 | dB | Pour les refroidisseurs eau/glycol-eau ; débit d'eau ou de fluide caloporteur nominal, échangeur de chaleur côté extérieur | - | N/A | $m^3/h$ |
| Émissions d'oxyde d'azote (le cas échéant) | NOx(**) | - | Mg/kwh d'entrée GCV | | | | |
| GWP du fluide frigorigène | - | 675 | Kg $CO_{2\,eq}$ (100 ans) | | | | |
| Conditions de notation standard utilisées | Applications à température moyenne | | | | | | |
| Détails de contact | Consultez la couverture arrière du manuel. | | | | | | |

(**) Si Cdh n'est pas déterminé par mesure, alors le coefficient de dégradation par défaut des refroidisseurs sera de 0,9.
(**)À partir du 26 septembre 2018.

# Exigences en matière d'informations pour les refroidisseurs de confort

| | |
|---|---|
| Modèle(s): | 6kW(chauffage 3kW);6kW |
| Échangeur de chaleur côté extérieur du refroidisseur | Air à eau |
| Échangeur de chaleur côté intérieur du refroidisseur | Eau |
| Type: | Compression de vapeur entraînée par compresseur |
| Entraînement du compresseur | Moteur électrique |

| Article | Symbol | Valeur | Unité | Article | Symbol | Valeur | Unité |
|---|---|---|---|---|---|---|---|
| **Puissance thermique nominale(*)** | Puissance nominale.c | 6.1 | kW | **Efficacité énergétique saisonnière pour le chauffage de l'espace** | $H_{s.c}$ | 207 | % |
| Capacité déclarée de refroidissement pour une charge partielle à la température extérieure donnée Tj. | | | | Rapport de l'efficacité énergétique déclarée pour le refroidissement en charge partielle à une température extérieure donnée $T_j$. | | | |
| $T_j$ = + 35°C | $P_{dc}$ | 6.1 | kW | $T_j$ =+35°C | $EER_d$ | 3.22 | - |
| $T_j$ = + 30°C | $P_{dc}$ | 4.7 | kW | $T_j$ = +30°C | $EER_d$ | 4.68 | - |
| $T_j$ = + 25°C | $P_{dc}$ | 2.8 | kW | $T_j$ = + 25°C | $EER_d$ | 6.25 | - |
| $T_j$ = + 20°C | $P_{dc}$ | 1.2 | kW | $T_j$ = + 20°C | $EER_d$ | 6.07 | - |
| Coefficient de dégradation du refroidisseur (*) | $C_{dc}$ | 0.9 | kW | | | | |
| Consommation d'énergie dans des modes autres que le "mode actif" | | | | | | | |
| Mode hors tension | $P_{OFF}$ | 0.010 | kW | Mode de chauffage du carter | $P_{ck}$ | 0.000 | KW |
| Mode thermostat éteint | $P_{TO}$ | 0.010 | kW | Mode veille | $P_{SB}$ | 0.010 | KW |
| Autres projets | | | | | | | |
| Contrôle de la capacité | Variables | | | **Pour les refroidisseurs de confort air-eau ; débit d'air, mesuré à l'extérieur.** | - | 2800 | $m^3/h$ |
| Niveau de puissance acoustique, à l'intérieur / à l'extérieur | LWA | -/59 | dB | Pour les refroidisseurs eau/glycol-eau ; débit d'eau ou de fluide caloporteur nominal, échangeur de chaleur côté extérieur | - | N/A | $m^3/h$ |
| Émissions d'oxyde d'azote (le cas échéant) | NOx(**) | - | Mg/kwh d'entrée GCV | | | | |
| GWP du fluide frigorigène | - | 675 | Kg $CO_{2\,eq}$ (100 ans) | | | | |
| Conditions de notation standard utilisées | Application à basse température | | | | | | |
| Détails de contact | Consultez la couverture arrière du manuel. | | | | | | |

(**) Si Cdh n'est pas déterminé par mesure, alors le coefficient de dégradation par défaut des refroidisseurs sera de 0,9.
(**)À partir du 26 septembre 2018.

# Exigences en matière d'informations pour les refroidisseurs de confort

| | |
|---|---|
| Modèle(s): | 4kW(chauffage 3kW);4kW |
| Échangeur de chaleur côté extérieur du refroidisseur | Air à eau |
| Échangeur de chaleur côté intérieur du refroidisseur | Eau |
| Type: | Compression de vapeur entraînée par compresseur |
| Entraînement du compresseur | Moteur électrique |

| Article | Symbol | Valeur | Unité | Article | Symbol | Valeur | Unité |
|---|---|---|---|---|---|---|---|
| **Puissance thermique nominale(*)** | Puissance nominale.c | 6.1 | kW | **Efficacité énergétique saisonnière pour le chauffage de l'espace** | $H_{s.c}$ | 319 | % |
| Capacité déclarée de refroidissement pour une charge partielle à la température extérieure donnée Tj. | | | | Rapport de l'efficacité énergétique déclarée pour le refroidissement en charge partielle à une température extérieure donnée $T_j$. | | | |
| $T_j$ = + 35°C | $P_{dc}$ | 6.1 | kW | $T_j$ =+35°C | $EER_d$ | 5.19 | - |
| $T_j$ = + 30°C | $P_{dc}$ | 4.4 | kW | $T_j$ = +30°C | $EER_d$ | 7.22 | - |
| $T_j$ = + 25°C | $P_{dc}$ | 2.9 | kW | $T_j$ = + 25°C | $EER_d$ | 10.09 | - |
| $T_j$ = + 20°C | $P_{dc}$ | 1.3 | kW | $T_j$ = + 20°C | $EER_d$ | 8.82 | - |
| Coefficient de dégradation du refroidisseur (*) | $C_{dc}$ | 0.9 | kW | | | | |
| Consommation d'énergie dans des modes autres que le "mode actif" | | | | | | | |
| Mode hors tension | $P_{OFF}$ | 0.010 | kW | Mode de chauffage du carter | $P_{ck}$ | 0.000 | KW |
| Mode thermostat éteint | $P_{TO}$ | 0.010 | kW | Mode veille | $P_{SB}$ | 0.010 | KW |
| Autres projets | | | | | | | |
| Contrôle de la capacité | Variables | | | **Pour les refroidisseurs de confort air-eau ; débit d'air, mesuré à l'extérieur.** | - | 2800 | $m^3/h$ |
| Niveau de puissance acoustique, à l'intérieur / à l'extérieur | LWA | -/59 | dB | Pour les refroidisseurs eau/glycol-eau ; débit d'eau ou de fluide caloporteur nominal, échangeur de chaleur côté extérieur | - | N/A | $m^3/h$ |
| Émissions d'oxyde d'azote (le cas échéant) | NOx(**) | - | Mg/kwh d'entrée GCV | | | | |
| GWP du fluide frigorigène | - | 675 | Kg $CO_{2\,eq}$ (100 ans) | | | | |
| Conditions de notation standard utilisées | Applications à température moyenne | | | | | | |
| Détails de contact | Consultez la couverture arrière du manuel. | | | | | | |

(**) Si Cdh n'est pas déterminé par mesure, alors le coefficient de dégradation par défaut des refroidisseurs sera de 0,9.
(**)À partir du 26 septembre 2018.

# Exigences en matière d'informations pour les refroidisseurs de confort

| | |
|---|---|
| Modèle(s): | 8kW(chauffage 3kW);8kW |
| Échangeur de chaleur côté extérieur du refroidisseur | Air à eau |
| Échangeur de chaleur côté intérieur du refroidisseur | Eau |
| Type: | Compression de vapeur entraînée par compresseur |
| Entraînement du compresseur | Moteur électrique |

| Article | Symbol | Valeur | Unité | Article | Symbol | Valeur | Unité |
|---|---|---|---|---|---|---|---|
| **Puissance thermique nominale(*)** | Puissance nominale.c | 7 | kW | **Efficacité énergétique saisonnière pour le chauffage de l'espace** | $H_{s.c}$ | 214 | % |
| Capacité déclarée de refroidissement pour une charge partielle à la température extérieure donnée Tj. | | | | Rapport de l'efficacité énergétique déclarée pour le refroidissement en charge partielle à une température extérieure donnée $T_j$. | | | |
| $T_j$ = + 35°C | $P_{dc}$ | 7.0 | kW | $T_j$ =+35°C | $EER_d$ | 3.38 | - |
| $T_j$ = + 30°C | $P_{dc}$ | 5.7 | kW | $T_j$ = +30°C | $EER_d$ | 4.60 | - |
| $T_j$ = + 25°C | $P_{dc}$ | 3.7 | kW | $T_j$ = + 25°C | $EER_d$ | 6.23 | - |
| $T_j$ = + 20°C | $P_{dc}$ | 1.7 | kW | $T_j$ = + 20°C | $EER_d$ | 7.69 | - |
| Coefficient de dégradation du refroidisseur (*) | $C_{dc}$ | 0.9 | kW | | | | |
| Consommation d'énergie dans des modes autres que le "mode actif" | | | | | | | |
| Mode hors tension | $P_{OFF}$ | 0.014 | kW | Mode de chauffage du carter | $P_{ck}$ | 0.000 | KW |
| Mode thermostat éteint | $P_{TO}$ | 0.024 | kW | Mode veille | $P_{SB}$ | 0.014 | KW |
| Autres projets | | | | | | | |
| Contrôle de la capacité | Variables | | | **Pour les refroidisseurs de confort air-eau ; débit d'air, mesuré à l'extérieur.** | - | 4000 | $m^3/h$ |
| Niveau de puissance acoustique, à l'intérieur / à l'extérieur | LWA | -/60 | dB | Pour les refroidisseurs eau/glycol-eau ; débit d'eau ou de fluide caloporteur nominal, échangeur de chaleur côté extérieur | - | N/A | $m^3/h$ |
| Émissions d'oxyde d'azote (le cas échéant) | NOx(**) | - | Mg/kwh d'entrée GCV | | | | |
| GWP du fluide frigorigène | - | 675 | Kg $CO_{2\,eq}$ (100 ans) | | | | |
| Conditions de notation standard utilisées | Application à basse température | | | | | | |
| Détails de contact | Consultez la couverture arrière du manuel. | | | | | | |

(**) Si Cdh n'est pas déterminé par mesure, alors le coefficient de dégradation par défaut des refroidisseurs sera de 0,9.
(**)À partir du 26 septembre 2018.

# Exigences en matière d'informations pour les refroidisseurs de confort

| | |
|---|---|
| Modèle(s): | 8kW(chauffage 3kW);8kW |
| Échangeur de chaleur côté extérieur du refroidisseur | Air à eau |
| Échangeur de chaleur côté intérieur du refroidisseur | Eau |
| Type: | Compression de vapeur entraînée par compresseur |
| Entraînement du compresseur | Moteur électrique |

| Article | Symbol | Valeur | Unité | Article | Symbol | Valeur | Unité |
|---|---|---|---|---|---|---|---|
| **Puissance thermique nominale(*)** | Puissance nominale.c | 8 | kW | **Efficacité énergétique saisonnière pour le chauffage de l'espace** | $H_{s.c}$ | 318 | % |
| Capacité déclarée de refroidissement pour une charge partielle à la température extérieure donnée Tj. | | | | Rapport de l'efficacité énergétique déclarée pour le refroidissement en charge partielle à une température extérieure donnée $T_j$. | | | |
| $T_j$ = + 35°C | $P_{dc}$ | 8.0 | kW | $T_j$ =+35°C | $EER_d$ | 4.95 | - |
| $T_j$ = + 30°C | $P_{dc}$ | 6.4 | kW | $T_j$ = +30°C | $EER_d$ | 6.61 | - |
| $T_j$ = + 25°C | $P_{dc}$ | 4.3 | kW | $T_j$ = + 25°C | $EER_d$ | 9.06 | - |
| $T_j$ = + 20°C | $P_{dc}$ | 1.8 | kW | $T_j$ = + 20°C | $EER_d$ | 13.14 | - |
| Coefficient de dégradation du refroidisseur (*) | $C_{dc}$ | 0.9 | kW | | | | |
| Consommation d'énergie dans des modes autres que le "mode actif" | | | | | | | |
| Mode hors tension | $P_{OFF}$ | 0.014 | kW | Mode de chauffage du carter | $P_{ck}$ | 0.000 | KW |
| Mode thermostat éteint | $P_{TO}$ | 0.024 | kW | Mode veille | $P_{SB}$ | 0.014 | KW |
| Autres projets | | | | | | | |
| Contrôle de la capacité | Variables | | | **Pour les refroidisseurs de confort air-eau ; débit d'air, mesuré à l'extérieur.** | - | 4000 | $m^3/h$ |
| Niveau de puissance acoustique, à l'intérieur / à l'extérieur | LWA | -/60 | dB | Pour les refroidisseurs eau/glycol-eau ; débit d'eau ou de fluide caloporteur nominal, échangeur de chaleur côté extérieur | - | N/A | $m^3/h$ |
| Émissions d'oxyde d'azote (le cas échéant) | NOx(**) | - | Mg/kwh d'entrée GCV | | | | |
| GWP du fluide frigorigène | - | 675 | Kg $CO_{2\,eq}$ (100 ans) | | | | |
| Conditions de notation standard utilisées | Applications à température moyenne | | | | | | |
| Détails de contact | Consultez la couverture arrière du manuel. | | | | | | |

(**) Si Cdh n'est pas déterminé par mesure, alors le coefficient de dégradation par défaut des refroidisseurs sera de 0,9.
(**)À partir du 26 septembre 2018.

# Exigences en matière d'informations pour les refroidisseurs de confort

| | |
|---|---|
| Modèle(s): | 10kW(chauffage 3kW);10kW |
| Échangeur de chaleur côté extérieur du refroidisseur | Air à eau |
| Échangeur de chaleur côté intérieur du refroidisseur | Eau |
| Type: | Compression de vapeur entraînée par compresseur |
| Entraînement du compresseur | Moteur électrique |

| Article | Symbol | Valeur | Unité | Article | Symbol | Valeur | Unité |
|---|---|---|---|---|---|---|---|
| **Puissance thermique nominale(*)** | Puissance nominale.c | 8 | kW | **Efficacité énergétique saisonnière pour le chauffage de l'espace** | $H_{s.c}$ | 212 | % |
| Capacité déclarée de refroidissement pour une charge partielle à la température extérieure donnée Tj. | | | | Rapport de l'efficacité énergétique déclarée pour le refroidissement en charge partielle à une température extérieure donnée $T_j$. | | | |
| $T_j$ = + 35°C | $P_{dc}$ | 8.1 | kW | $T_j$ =+35°C | $EER_d$ | 3.16 | - |
| $T_j$ = + 30°C | $P_{dc}$ | 6.6 | kW | $T_j$ = +30°C | $EER_d$ | 4.38 | - |
| $T_j$ = + 25°C | $P_{dc}$ | 4.3 | kW | $T_j$ = + 25°C | $EER_d$ | 6.18 | - |
| $T_j$ = + 20°C | $P_{dc}$ | 1.9 | kW | $T_j$ = + 20°C | $EER_d$ | 8.17 | - |
| Coefficient de dégradation du refroidisseur (*) | $C_{dc}$ | 0.9 | kW | | | | |
| Consommation d'énergie dans des modes autres que le "mode actif" | | | | | | | |
| Mode hors tension | $P_{OFF}$ | 0.014 | kW | Mode de chauffage du carter | $P_{ck}$ | 0.000 | KW |
| Mode thermostat éteint | $P_{TO}$ | 0.024 | kW | Mode veille | $P_{SB}$ | 0.014 | KW |
| Autres projets | | | | | | | |
| Contrôle de la capacité | Variables | | | **Pour les refroidisseurs de confort air-eau ; débit d'air, mesuré à l'extérieur.** | - | 4500 | $m^3/h$ |
| Niveau de puissance acoustique, à l'intérieur / à l'extérieur | LWA | -/61 | dB | Pour les refroidisseurs eau/glycol-eau ; débit d'eau ou de fluide caloporteur nominal, échangeur de chaleur côté extérieur | - | N/A | $m^3/h$ |
| Émissions d'oxyde d'azote (le cas échéant) | NOx(**) | - | Mg/kwh d'entrée GCV | | | | |
| GWP du fluide frigorigène | - | 675 | Kg $CO_{2\,eq}$ (100 ans) | | | | |
| Conditions de notation standard utilisées | Application à basse température | | | | | | |
| Détails de contact | Consultez la couverture arrière du manuel. | | | | | | |

(**) Si Cdh n'est pas déterminé par mesure, alors le coefficient de dégradation par défaut des refroidisseurs sera de 0,9.
(**)À partir du 26 septembre 2018.

# Exigences en matière d'informations pour les refroidisseurs de confort

| | |
|---|---|
| Modèle(s): | 10kW(chauffage 3kW);10kW |
| Échangeur de chaleur côté extérieur du refroidisseur | Air à eau |
| Échangeur de chaleur côté intérieur du refroidisseur | Eau |
| Type: | Compression de vapeur entraînée par compresseur |
| Entraînement du compresseur | Moteur électrique |

| Article | Symbol | Valeur | Unité | Article | Symbol | Valeur | Unité |
|---|---|---|---|---|---|---|---|
| **Puissance thermique nominale(*)** | Puissance nominale.c | 10 | kW | **Efficacité énergétique saisonnière pour le chauffage de l'espace** | $H_{s.c}$ | 307 | % |
| Capacité déclarée de refroidissement pour une charge partielle à la température extérieure donnée Tj. | | | | Rapport de l'efficacité énergétique déclarée pour le refroidissement en charge partielle à une température extérieure donnée $T_j$. | | | |
| $T_j$ = + 35°C | $P_{dc}$ | 9.5 | kW | $T_j$ =+35°C | $EER_d$ | 4.56 | - |
| $T_j$ = + 30°C | $P_{dc}$ | 7.7 | kW | $T_j$ = +30°C | $EER_d$ | 6.33 | - |
| $T_j$ = + 25°C | $P_{dc}$ | 4.9 | kW | $T_j$ = + 25°C | $EER_d$ | 8.48 | - |
| $T_j$ = + 20°C | $P_{dc}$ | 2.3 | kW | $T_j$ = + 20°C | $EER_d$ | 13.19 | - |
| Coefficient de dégradation du refroidisseur (*) | $C_{dc}$ | 0.9 | kW | | | | |
| Consommation d'énergie dans des modes autres que le "mode actif" | | | | | | | |
| Mode hors tension | $P_{OFF}$ | 0.014 | kW | Mode de chauffage du carter | $P_{ck}$ | 0.000 | KW |
| Mode thermostat éteint | $P_{TO}$ | 0.024 | kW | Mode veille | $P_{SB}$ | 0.014 | KW |
| Autres projets | | | | | | | |
| Contrôle de la capacité | Variables | | | **Pour les refroidisseurs de confort air-eau ; débit d'air, mesuré à l'extérieur.** | - | 4500 | $m^3/h$ |
| Niveau de puissance acoustique, à l'intérieur / à l'extérieur | LWA | -/61 | dB | Pour les refroidisseurs eau/glycol-eau ; débit d'eau ou de fluide caloporteur nominal, échangeur de chaleur côté extérieur | - | N/A | $m^3/h$ |
| Émissions d'oxyde d'azote (le cas échéant) | NOx(**) | - | Mg/kwh d'entrée GCV | | | | |
| GWP du fluide frigorigène | - | 675 | Kg $CO_{2\,eq}$ (100 ans) | | | | |
| Conditions de notation standard utilisées | Applications à température moyenne | | | | | | |
| Détails de contact | Consultez la couverture arrière du manuel. | | | | | | |

(**) Si Cdh n'est pas déterminé par mesure, alors le coefficient de dégradation par défaut des refroidisseurs sera de 0,9.
(**)À partir du 26 septembre 2018.

# Exigences en matière d'informations pour les refroidisseurs de confort

| | |
|---|---|
| Modèle(s): | 12kW(chauffage 3kW);12kW |
| Échangeur de chaleur côté extérieur du refroidisseur | Air à eau |
| Échangeur de chaleur côté intérieur du refroidisseur | Eau |
| Type: | Compression de vapeur entraînée par compresseur |
| Entraînement du compresseur | Moteur électrique |

| Article | Symbol | Valeur | Unité | Article | Symbol | Valeur | Unité |
|---|---|---|---|---|---|---|---|
| **Puissance thermique nominale(*)** | Puissance nominale.c | 12 | kW | **Efficacité énergétique saisonnière pour le chauffage de l'espace** | $H_{s.c}$ | 201 | % |
| Capacité déclarée de refroidissement pour une charge partielle à la température extérieure donnée Tj. | | | | Rapport de l'efficacité énergétique déclarée pour le refroidissement en charge partielle à une température extérieure donnée $T_j$. | | | |
| $T_j$ = + 35°C | $P_{dc}$ | 11.6 | kW | $T_j$ =+35°C | $EER_d$ | 2.80 | - |
| $T_j$ = + 30°C | $P_{dc}$ | 8.7 | kW | $T_j$ = +30°C | $EER_d$ | 4.34 | - |
| $T_j$ = + 25°C | $P_{dc}$ | 5.8 | kW | $T_j$ = + 25°C | $EER_d$ | 6.02 | - |
| $T_j$ = + 20°C | $P_{dc}$ | 2.6 | kW | $T_j$ = + 20°C | $EER_d$ | 6.46 | - |
| Coefficient de dégradation du refroidisseur (*) | $C_{dc}$ | 0.9 | kW | | | | |
| Consommation d'énergie dans des modes autres que le "mode actif" | | | | | | | |
| Mode hors tension | $P_{OFF}$ | 0.020 | kW | Mode de chauffage du carter | $P_{ck}$ | 0.000 | KW |
| Mode thermostat éteint | $P_{TO}$ | 0.010 | kW | Mode veille | $P_{SB}$ | 0.020 | KW |
| Autres projets | | | | | | | |
| Contrôle de la capacité | Variables | | | **Pour les refroidisseurs de confort air-eau ; débit d'air, mesuré à l'extérieur.** | - | 5000 | $m^3/h$ |
| Niveau de puissance acoustique, à l'intérieur / à l'extérieur | LWA | -/64 | dB | Pour les refroidisseurs eau/glycol-eau ; débit d'eau ou de fluide caloporteur nominal, échangeur de chaleur côté extérieur | - | N/A | $m^3/h$ |
| Émissions d'oxyde d'azote (le cas échéant) | NOx(**) | - | Mg/kwh d'entrée GCV | | | | |
| GWP du fluide frigorigène | - | 675 | Kg $CO_{2\,eq}$ (100 ans) | | | | |
| Conditions de notation standard utilisées | Application à basse température | | | | | | |
| Détails de contact | Consultez la couverture arrière du manuel. | | | | | | |

(**) Si Cdh n'est pas déterminé par mesure, alors le coefficient de dégradation par défaut des refroidisseurs sera de 0,9.
(**)À partir du 26 septembre 2018.

# Exigences en matière d'informations pour les refroidisseurs de confort

| | |
|---|---|
| Modèle(s): | 12kW(chauffage 3kW);12kW |
| Échangeur de chaleur côté extérieur du refroidisseur | Air à eau |
| Échangeur de chaleur côté intérieur du refroidisseur | Eau |
| Type: | Compression de vapeur entraînée par compresseur |
| Entraînement du compresseur | Moteur électrique |

| Article | Symbol | Valeur | Unité | Article | Symbol | Valeur | Unité |
|---|---|---|---|---|---|---|---|
| **Puissance thermique nominale(*)** | Puissance nominale.c | 12 | kW | **Efficacité énergétique saisonnière pour le chauffage de l'espace** | $H_{s.c}$ | 295 | % |
| Capacité déclarée de refroidissement pour une charge partielle à la température extérieure donnée Tj. | | | | Rapport de l'efficacité énergétique déclarée pour le refroidissement en charge partielle à une température extérieure donnée $T_j$. | | | |
| $T_j$ = + 35°C | $P_{dc}$ | 12.0 | kW | $T_j$ =+35°C | $EER_d$ | 3.96 | - |
| $T_j$ = + 30°C | $P_{dc}$ | 9.3 | kW | $T_j$ = +30°C | $EER_d$ | 6.16 | - |
| $T_j$ = + 25°C | $P_{dc}$ | 5.6 | kW | $T_j$ = + 25°C | $EER_d$ | 9.03 | - |
| $T_j$ = + 20°C | $P_{dc}$ | 3.5 | kW | $T_j$ = + 20°C | $EER_d$ | 10.04 | - |
| Coefficient de dégradation du refroidisseur (*) | $C_{dc}$ | 0.9 | kW | | | | |
| Consommation d'énergie dans des modes autres que le "mode actif" | | | | | | | |
| Mode hors tension | $P_{OFF}$ | 0.020 | kW | Mode de chauffage du carter | $P_{ck}$ | 0.000 | KW |
| Mode thermostat éteint | $P_{TO}$ | 0.010 | kW | Mode veille | $P_{SB}$ | 0.020 | KW |
| Autres projets | | | | | | | |
| Contrôle de la capacité | Variables | | | **Pour les refroidisseurs de confort air-eau ; débit d'air, mesuré à l'extérieur.** | - | 5000 | $m^3/h$ |
| Niveau de puissance acoustique, à l'intérieur / à l'extérieur | LWA | -/64 | dB | Pour les refroidisseurs eau/glycol-eau ; débit d'eau ou de fluide caloporteur nominal, échangeur de chaleur côté extérieur | - | N/A | $m^3/h$ |
| Émissions d'oxyde d'azote (le cas échéant) | NOx(**) | - | Mg/kwh d'entrée GCV | | | | |
| GWP du fluide frigorigène | - | 675 | Kg $CO_{2\,eq}$ (100 ans) | | | | |
| Conditions de notation standard utilisées | Applications à température moyenne | | | | | | |
| Détails de contact | Consultez la couverture arrière du manuel. | | | | | | |

(**) Si Cdh n'est pas déterminé par mesure, alors le coefficient de dégradation par défaut des refroidisseurs sera de 0,9.
(**)À partir du 26 septembre 2018.

# Exigences en matière d'informations pour les refroidisseurs de confort

| | |
|---|---|
| Modèle(s): | 14kW(chauffage 3kW);14kW |
| Échangeur de chaleur côté extérieur du refroidisseur | Air à eau |
| Échangeur de chaleur côté intérieur du refroidisseur | Eau |
| Type: | Compression de vapeur entraînée par compresseur |
| Entraînement du compresseur | Moteur électrique |

| Article | Symbol | Valeur | Unité | Article | Symbol | Valeur | Unité |
|---|---|---|---|---|---|---|---|
| **Puissance thermique nominale(*)** | Puissance nominale.c | 13 | kW | **Efficacité énergétique saisonnière pour le chauffage de l'espace** | $H_{s.c}$ | 200 | % |
| Capacité déclarée de refroidissement pour une charge partielle à la température extérieure donnée Tj. | | | | Rapport de l'efficacité énergétique déclarée pour le refroidissement en charge partielle à une température extérieure donnée $T_j$. | | | |
| $T_j$ = + 35°C | $P_{dc}$ | 12.7 | kW | $T_j$ =+35°C | $EER_d$ | 2.59 | - |
| $T_j$ = + 30°C | $P_{dc}$ | 9.5 | kW | $T_j$ = +30°C | $EER_d$ | 4.33 | - |
| $T_j$ = + 25°C | $P_{dc}$ | 6.3 | kW | $T_j$ = + 25°C | $EER_d$ | 6.08 | - |
| $T_j$ = + 20°C | $P_{dc}$ | 3.0 | kW | $T_j$ = + 20°C | $EER_d$ | 6.64 | - |
| Coefficient de dégradation du refroidisseur (*) | $C_{dc}$ | 0.9 | kW | | | | |
| Consommation d'énergie dans des modes autres que le "mode actif" | | | | | | | |
| Mode hors tension | $P_{OFF}$ | 0.020 | kW | Mode de chauffage du carter | $P_{ck}$ | 0.000 | KW |
| Mode thermostat éteint | $P_{TO}$ | 0.010 | kW | Mode veille | $P_{SB}$ | 0.020 | KW |
| Autres projets | | | | | | | |
| Contrôle de la capacité | Variables | | | **Pour les refroidisseurs de confort air-eau ; débit d'air, mesuré à l'extérieur.** | - | 5500 | $m^3/h$ |
| Niveau de puissance acoustique, à l'intérieur / à l'extérieur | LWA | -/66 | dB | Pour les refroidisseurs eau/glycol-eau ; débit d'eau ou de fluide caloporteur nominal, échangeur de chaleur côté extérieur | - | N/A | $m^3/h$ |
| Émissions d'oxyde d'azote (le cas échéant) | NOx(**) | - | Mg/kwh d'entrée GCV | | | | |
| GWP du fluide frigorigène | - | 675 | Kg $CO_{2\,eq}$ (100 ans) | | | | |
| Conditions de notation standard utilisées | Application à basse température | | | | | | |
| Détails de contact | Consultez la couverture arrière du manuel. | | | | | | |

(**) Si Cdh n'est pas déterminé par mesure, alors le coefficient de dégradation par défaut des refroidisseurs sera de 0,9.
(**)À partir du 26 septembre 2018.

# Exigences en matière d'informations pour les refroidisseurs de confort

| | |
|---|---|
| Modèle(s): | 14kW(chauffage 3kW);14kW |
| Échangeur de chaleur côté extérieur du refroidisseur | Air à eau |
| Échangeur de chaleur côté intérieur du refroidisseur | Eau |
| Type: | Compression de vapeur entraînée par compresseur |
| Entraînement du compresseur | Moteur électrique |

| Article | Symbol | Valeur | Unité | Article | Symbol | Valeur | Unité |
|---|---|---|---|---|---|---|---|
| **Puissance thermique nominale(*)** | Puissance nominale.c | 14 | kW | **Efficacité énergétique saisonnière pour le chauffage de l'espace** | $H_{s.c}$ | 281 | % |
| Capacité déclarée de refroidissement pour une charge partielle à la température extérieure donnée Tj. | | | | Rapport de l'efficacité énergétique déclarée pour le refroidissement en charge partielle à une température extérieure donnée $T_j$. | | | |
| $T_j$ = + 35°C | $P_{dc}$ | 13.6 | kW | $T_j$ =+35°C | $EER_d$ | 3.73 | - |
| $T_j$ = + 30°C | $P_{dc}$ | 10.4 | kW | $T_j$ = +30°C | $EER_d$ | 5.75 | - |
| $T_j$ = + 25°C | $P_{dc}$ | 6.6 | kW | $T_j$ = + 25°C | $EER_d$ | 8.58 | - |
| $T_j$ = + 20°C | $P_{dc}$ | 3.5 | kW | $T_j$ = + 20°C | $EER_d$ | 9.96 | - |
| Coefficient de dégradation du refroidisseur (*) | $C_{dc}$ | 0.9 | kW | | | | |
| Consommation d'énergie dans des modes autres que le "mode actif" | | | | | | | |
| Mode hors tension | $P_{OFF}$ | 0.020 | kW | Mode de chauffage du carter | $P_{ck}$ | 0.000 | KW |
| Mode thermostat éteint | $P_{TO}$ | 0.010 | kW | Mode veille | $P_{SB}$ | 0.020 | KW |
| Autres projets | | | | | | | |
| Contrôle de la capacité | Variables | | | **Pour les refroidisseurs de confort air-eau ; débit d'air, mesuré à l'extérieur.** | - | 5500 | $m^3/h$ |
| Niveau de puissance acoustique, à l'intérieur / à l'extérieur | LWA | -/66 | dB | Pour les refroidisseurs eau/glycol-eau ; débit d'eau ou de fluide caloporteur nominal, échangeur de chaleur côté extérieur | - | N/A | $m^3/h$ |
| Émissions d'oxyde d'azote (le cas échéant) | NOx(**) | - | Mg/kwh d'entrée GCV | | | | |
| GWP du fluide frigorigène | - | 675 | Kg $CO_{2\,eq}$ (100 ans) | | | | |
| Conditions de notation standard utilisées | Applications à température moyenne | | | | | | |
| Détails de contact | Consultez la couverture arrière du manuel. | | | | | | |

(**) Si Cdh n'est pas déterminé par mesure, alors le coefficient de dégradation par défaut des refroidisseurs sera de 0,9.
(**)À partir du 26 septembre 2018.

# Exigences en matière d'informations pour les refroidisseurs de confort

| | |
|---|---|
| Modèle(s): | 16kW(chauffage 3kW);16kW |
| Échangeur de chaleur côté extérieur du refroidisseur | Air à eau |
| Échangeur de chaleur côté intérieur du refroidisseur | Eau |
| Type: | Compression de vapeur entraînée par compresseur |
| Entraînement du compresseur | Moteur électrique |

| Article | Symbol | Valeur | Unité | Article | Symbol | Valeur | Unité |
|---|---|---|---|---|---|---|---|
| **Puissance thermique nominale(*)** | Puissance nominale.c | 14 | kW | **Efficacité énergétique saisonnière pour le chauffage de l'espace** | $H_{s.c}$ | 192 | % |
| Capacité déclarée de refroidissement pour une charge partielle à la température extérieure donnée Tj. | | | | Rapport de l'efficacité énergétique déclarée pour le refroidissement en charge partielle à une température extérieure donnée $T_j$. | | | |
| $T_j$ = + 35°C | $P_{dc}$ | 14.3 | kW | $T_j$ =+35°C | $EER_d$ | 2.51 | - |
| $T_j$ = + 30°C | $P_{dc}$ | 10.6 | kW | $T_j$ = +30°C | $EER_d$ | 3.70 | - |
| $T_j$ = + 25°C | $P_{dc}$ | 6.8 | kW | $T_j$ = + 25°C | $EER_d$ | 5.87 | - |
| $T_j$ = + 20°C | $P_{dc}$ | 3.5 | kW | $T_j$ = + 20°C | $EER_d$ | 7.23 | - |
| Coefficient de dégradation du refroidisseur (*) | $C_{dc}$ | 0.9 | kW | | | | |
| Consommation d'énergie dans des modes autres que le "mode actif" | | | | | | | |
| Mode hors tension | $P_{OFF}$ | 0.020 | kW | Mode de chauffage du carter | $P_{ck}$ | 0.000 | KW |
| Mode thermostat éteint | $P_{TO}$ | 0.010 | kW | Mode veille | $P_{SB}$ | 0.020 | KW |
| Autres projets | | | | | | | |
| Contrôle de la capacité | Variables | | | **Pour les refroidisseurs de confort air-eau ; débit d'air, mesuré à l'extérieur.** | - | 6000 | $m^3/h$ |
| Niveau de puissance acoustique, à l'intérieur / à l'extérieur | LWA | -/68 | dB | Pour les refroidisseurs eau/glycol-eau ; débit d'eau ou de fluide caloporteur nominal, échangeur de chaleur côté extérieur | - | N/A | $m^3/h$ |
| Émissions d'oxyde d'azote (le cas échéant) | NOx(**) | - | Mg/kwh d'entrée GCV | | | | |
| GWP du fluide frigorigène | - | 675 | Kg $CO_{2\,eq}$ (100 ans) | | | | |
| Conditions de notation standard utilisées | Application à basse température | | | | | | |
| Détails de contact | Consultez la couverture arrière du manuel. | | | | | | |

(**) Si Cdh n'est pas déterminé par mesure, alors le coefficient de dégradation par défaut des refroidisseurs sera de 0,9.
(**)À partir du 26 septembre 2018.

# Exigences en matière d'informations pour les refroidisseurs de confort

| | |
|---|---|
| Modèle(s): | 16kW(chauffage 3kW);16kW |
| Échangeur de chaleur côté extérieur du refroidisseur | Air à eau |
| Échangeur de chaleur côté intérieur du refroidisseur | Eau |
| Type: | Compression de vapeur entraînée par compresseur |
| Entraînement du compresseur | Moteur électrique |

| Article | Symbol | Valeur | Unité | Article | Symbol | Valeur | Unité |
|---|---|---|---|---|---|---|---|
| **Puissance thermique nominale(*)** | Puissance nominale.c | 15 | kW | **Efficacité énergétique saisonnière pour le chauffage de l'espace** | $H_{s.c}$ | 280 | % |
| Capacité déclarée de refroidissement pour une charge partielle à la température extérieure donnée Tj. | | | | Rapport de l'efficacité énergétique déclarée pour le refroidissement en charge partielle à une température extérieure donnée $T_j$. | | | |
| $T_j$ = + 35°C | $P_{dc}$ | 15.4 | kW | $T_j$ =+35°C | $EER_d$ | 3.50 | - |
| $T_j$ = + 30°C | $P_{dc}$ | 11.6 | kW | $T_j$ = +30°C | $EER_d$ | 5.45 | - |
| $T_j$ = + 25°C | $P_{dc}$ | 7.3 | kW | $T_j$ = + 25°C | $EER_d$ | 8.35 | - |
| $T_j$ = + 20°C | $P_{dc}$ | 4.6 | kW | $T_j$ = + 20°C | $EER_d$ | 11.68 | - |
| Coefficient de dégradation du refroidisseur (*) | $C_{dc}$ | 0.9 | kW | | | | |
| Consommation d'énergie dans des modes autres que le "mode actif" | | | | | | | |
| Mode hors tension | $P_{OFF}$ | 0.020 | kW | Mode de chauffage du carter | $P_{ck}$ | 0.000 | KW |
| Mode thermostat éteint | $P_{TO}$ | 0.010 | kW | Mode veille | $P_{SB}$ | 0.020 | KW |
| Autres projets | | | | | | | |
| Contrôle de la capacité | Variables | | | **Pour les refroidisseurs de confort air-eau ; débit d'air, mesuré à l'extérieur.** | - | 6000 | $m^3/h$ |
| Niveau de puissance acoustique, à l'intérieur / à l'extérieur | LWA | -/68 | dB | Pour les refroidisseurs eau/glycol-eau ; débit d'eau ou de fluide caloporteur nominal, échangeur de chaleur côté extérieur | - | N/A | $m^3/h$ |
| Émissions d'oxyde d'azote (le cas échéant) | NOx(**) | - | Mg/kwh d'entrée GCV | | | | |
| GWP du fluide frigorigène | - | 675 | Kg $CO_{2\,eq}$ (100 ans) | | | | |
| Conditions de notation standard utilisées | Applications à température moyenne | | | | | | |
| Détails de contact | Consultez la couverture arrière du manuel. | | | | | | |

(**) Si Cdh n'est pas déterminé par mesure, alors le coefficient de dégradation par défaut des refroidisseurs sera de 0,9.
(**)À partir du 26 septembre 2018.

# Exigences en matière d'informations pour les refroidisseurs de confort

| | |
|---|---|
| Modèle(s): | 3 - PH 12kw (chauffage 9kw); 3 - PH 12kw (chauffage 6kw); 3 - PH 12kw (chauffage 3kW); 3 - PH 12kw |
| Échangeur de chaleur côté extérieur du refroidisseur | Air à eau |
| Échangeur de chaleur côté intérieur du refroidisseur | Eau |
| Type: | Compression de vapeur entraînée par compresseur |
| Entraînement du compresseur | Moteur électrique |

| Article | Symbol | Valeur | Unité | Article | Symbol | Valeur | Unité |
|---|---|---|---|---|---|---|---|
| **Puissance thermique nominale(*)** | Puissance nominale.c | 12 | kW | **Efficacité énergétique saisonnière pour le chauffage de l'espace** | $H_{s.c}$ | 197 | % |
| Capacité déclarée de refroidissement pour une charge partielle à la température extérieure donnée Tj. | | | | Rapport de l'efficacité énergétique déclarée pour le refroidissement en charge partielle à une température extérieure donnée $T_j$. | | | |
| $T_j$ = + 35°C | $P_{dc}$ | 11.7 | kW | $T_j$ =+35°C | $EER_d$ | 2.64 | - |
| $T_j$ = + 30°C | $P_{dc}$ | 8.8 | kW | $T_j$ = +30°C | $EER_d$ | 4.09 | - |
| $T_j$ = + 25°C | $P_{dc}$ | 5.9 | kW | $T_j$ = + 25°C | $EER_d$ | 5.58 | - |
| $T_j$ = + 20°C | $P_{dc}$ | 4.1 | kW | $T_j$ = + 20°C | $EER_d$ | 8.01 | - |
| Coefficient de dégradation du refroidisseur (*) | $C_{dc}$ | 0.9 | kW | | | | |
| Consommation d'énergie dans des modes autres que le "mode actif" | | | | | | | |
| Mode hors tension | $P_{OFF}$ | 0.014 | kW | Mode de chauffage du carter | $P_{ck}$ | 0.000 | KW |
| Mode thermostat éteint | $P_{TO}$ | 0.024 | kW | Mode veille | $P_{SB}$ | 0.014 | KW |
| Autres projets | | | | | | | |
| Contrôle de la capacité | Variables | | | **Pour les refroidisseurs de confort air-eau ; débit d'air, mesuré à l'extérieur.** | - | 5000 | $m^3/h$ |
| Niveau de puissance acoustique, à l'intérieur / à l'extérieur | LWA | -/64 | dB | Pour les refroidisseurs eau/glycol-eau ; débit d'eau ou de fluide caloporteur nominal, échangeur de chaleur côté extérieur | - | N/A | $m^3/h$ |
| Émissions d'oxyde d'azote (le cas échéant) | NOx(**) | - | Mg/kwh d'entrée GCV | | | | |
| GWP du fluide frigorigène | - | 675 | Kg $CO_{2\,eq}$ (100 ans) | | | | |
| Conditions de notation standard utilisées | Application à basse température | | | | | | |
| Détails de contact | Consultez la couverture arrière du manuel. | | | | | | |

(**) Si Cdh n'est pas déterminé par mesure, alors le coefficient de dégradation par défaut des refroidisseurs sera de 0,9.
(**)À partir du 26 septembre 2018.

# Exigences en matière d'informations pour les refroidisseurs de confort

| | |
|---|---|
| Modèle(s): | 3 - PH 12kw (chauffage 9kw); 3 - PH 12kw (chauffage 6kw); 3 - PH 12kw (chauffage 3kW); 3 - PH 12kw |
| Échangeur de chaleur côté extérieur du refroidisseur | Air à eau |
| Échangeur de chaleur côté intérieur du refroidisseur | Eau |
| Type: | Compression de vapeur entraînée par compresseur |
| Entraînement du compresseur | Moteur électrique |

| Article | Symbol | Valeur | Unité | Article | Symbol | Valeur | Unité |
|---|---|---|---|---|---|---|---|
| **Puissance thermique nominale(*)** | Puissance nominale.c | 12 | kW | **Efficacité énergétique saisonnière pour le chauffage de l'espace** | $H_{s.c}$ | 276 | % |
| Capacité déclarée de refroidissement pour une charge partielle à la température extérieure donnée Tj. | | | | Rapport de l'efficacité énergétique déclarée pour le refroidissement en charge partielle à une température extérieure donnée $T_j$. | | | |
| $T_j$ = + 35°C | $P_{dc}$ | 12.0 | kW | $T_j$ =+35°C | $EER_d$ | 3.91 | - |
| $T_j$ = + 30°C | $P_{dc}$ | 9.3 | kW | $T_j$ = +30°C | $EER_d$ | 5.67 | - |
| $T_j$ = + 25°C | $P_{dc}$ | 5.7 | kW | $T_j$ = + 25°C | $EER_d$ | 7.98 | - |
| $T_j$ = + 20°C | $P_{dc}$ | 5.1 | kW | $T_j$ = + 20°C | $EER_d$ | 11.37 | - |
| Coefficient de dégradation du refroidisseur (*) | $C_{dc}$ | 0.9 | kW | | | | |
| Consommation d'énergie dans des modes autres que le "mode actif" | | | | | | | |
| Mode hors tension | $P_{OFF}$ | 0.014 | kW | Mode de chauffage du carter | $P_{ck}$ | 0.000 | KW |
| Mode thermostat éteint | $P_{TO}$ | 0.024 | kW | Mode veille | $P_{SB}$ | 0.014 | KW |
| Autres projets | | | | | | | |
| Contrôle de la capacité | Variables | | | **Pour les refroidisseurs de confort air-eau ; débit d'air, mesuré à l'extérieur.** | - | 5000 | $m^3/h$ |
| Niveau de puissance acoustique, à l'intérieur / à l'extérieur | LWA | -/64 | dB | Pour les refroidisseurs eau/glycol-eau ; débit d'eau ou de fluide caloporteur nominal, échangeur de chaleur côté extérieur | - | N/A | $m^3/h$ |
| Émissions d'oxyde d'azote (le cas échéant) | NOx(**) | - | Mg/kwh d'entrée GCV | | | | |
| GWP du fluide frigorigène | - | 675 | Kg $CO_{2\,eq}$ (100 ans) | | | | |
| Conditions de notation standard utilisées | Applications à température moyenne | | | | | | |
| Détails de contact | Consultez la couverture arrière du manuel. | | | | | | |

(**) Si Cdh n'est pas déterminé par mesure, alors le coefficient de dégradation par défaut des refroidisseurs sera de 0,9.
(**)À partir du 26 septembre 2018.

# Exigences en matière d'informations pour les refroidisseurs de confort

| | |
|---|---|
| Modèle(s): | 3 - PH 14kw (chauffage 9kw); 3 - PH 14kw (chauffage 6kw); 3 - PH 14kw (chauffage 3kW); 3 - PH 14kw |
| Échangeur de chaleur côté extérieur du refroidisseur | Air à eau |
| Échangeur de chaleur côté intérieur du refroidisseur | Eau |
| Type: | Compression de vapeur entraînée par compresseur |
| Entraînement du compresseur | Moteur électrique |

| Article | Symbol | Valeur | Unité | Article | Symbol | Valeur | Unité |
|---|---|---|---|---|---|---|---|
| **Puissance thermique nominale(*)** | Puissance nominale.c | 13 | kW | **Efficacité énergétique saisonnière pour le chauffage de l'espace** | $H_{s.c}$ | 188 | % |
| Capacité déclarée de refroidissement pour une charge partielle à la température extérieure donnée Tj. | | | | Rapport de l'efficacité énergétique déclarée pour le refroidissement en charge partielle à une température extérieure donnée $T_j$. | | | |
| $T_j$ = + 35°C | $P_{dc}$ | 12.7 | kW | $T_j$ =+35°C | $EER_d$ | 2.36 | - |
| $T_j$ = + 30°C | $P_{dc}$ | 9.5 | kW | $T_j$ = +30°C | $EER_d$ | 4.07 | - |
| $T_j$ = + 25°C | $P_{dc}$ | 6.1 | kW | $T_j$ = + 25°C | $EER_d$ | 5.76 | - |
| $T_j$ = + 20°C | $P_{dc}$ | 2.8 | kW | $T_j$ = + 20°C | $EER_d$ | 6.05 | - |
| Coefficient de dégradation du refroidisseur (*) | $C_{dc}$ | 0.9 | kW | | | | |
| Consommation d'énergie dans des modes autres que le "mode actif" | | | | | | | |
| Mode hors tension | $P_{OFF}$ | 0.014 | kW | Mode de chauffage du carter | $P_{ck}$ | 0.000 | KW |
| Mode thermostat éteint | $P_{TO}$ | 0.024 | kW | Mode veille | $P_{SB}$ | 0.014 | KW |
| Autres projets | | | | | | | |
| Contrôle de la capacité | Variables | | | **Pour les refroidisseurs de confort air-eau ; débit d'air, mesuré à l'extérieur.** | - | 5500 | $m^3/h$ |
| Niveau de puissance acoustique, à l'intérieur / à l'extérieur | LWA | -/66 | dB | Pour les refroidisseurs eau/glycol-eau ; débit d'eau ou de fluide caloporteur nominal, échangeur de chaleur côté extérieur | - | N/A | $m^3/h$ |
| Émissions d'oxyde d'azote (le cas échéant) | NOx(**) | - | Mg/kwh d'entrée GCV | | | | |
| GWP du fluide frigorigène | - | 675 | Kg $CO_{2\,eq}$ (100 ans) | | | | |
| Conditions de notation standard utilisées | Application à basse température | | | | | | |
| Détails de contact | Consultez la couverture arrière du manuel. | | | | | | |

(**) Si Cdh n'est pas déterminé par mesure, alors le coefficient de dégradation par défaut des refroidisseurs sera de 0,9.
(**)À partir du 26 septembre 2018.

# Exigences en matière d'informations pour les refroidisseurs de confort

| | |
|---|---|
| Modèle(s): | 3 - PH 14kw (chauffage 9kw); 3 - PH 14kw (chauffage 6kw); 3 - PH 14kw (chauffage 3kW); 3 - PH 14kw |
| Échangeur de chaleur côté extérieur du refroidisseur | Air à eau |
| Échangeur de chaleur côté intérieur du refroidisseur | Eau |
| Type: | Compression de vapeur entraînée par compresseur |
| Entraînement du compresseur | Moteur électrique |

| Article | Symbol | Valeur | Unité | Article | Symbol | Valeur | Unité |
|---|---|---|---|---|---|---|---|
| **Puissance thermique nominale(*)** | Puissance nominale.c | 14 | kW | **Efficacité énergétique saisonnière pour le chauffage de l'espace** | $H_{s.c}$ | 269 | % |
| Capacité déclarée de refroidissement pour une charge partielle à la température extérieure donnée Tj. | | | | Rapport de l'efficacité énergétique déclarée pour le refroidissement en charge partielle à une température extérieure donnée $T_j$. | | | |
| $T_j$ = + 35°C | $P_{dc}$ | 13.5 | kW | $T_j$ =+35°C | $EER_d$ | 3.72 | - |
| $T_j$ = + 30°C | $P_{dc}$ | 10.3 | kW | $T_j$ = +30°C | $EER_d$ | 5.51 | - |
| $T_j$ = + 25°C | $P_{dc}$ | 6.5 | kW | $T_j$ = + 25°C | $EER_d$ | 8.11 | - |
| $T_j$ = + 20°C | $P_{dc}$ | 3.4 | kW | $T_j$ = + 20°C | $EER_d$ | 9.49 | - |
| Coefficient de dégradation du refroidisseur (*) | $C_{dc}$ | 0.9 | kW | | | | |
| Consommation d'énergie dans des modes autres que le "mode actif" | | | | | | | |
| Mode hors tension | $P_{OFF}$ | 0.014 | kW | Mode de chauffage du carter | $P_{ck}$ | 0.000 | KW |
| Mode thermostat éteint | $P_{TO}$ | 0.024 | kW | Mode veille | $P_{SB}$ | 0.014 | KW |
| Autres projets | | | | | | | |
| Contrôle de la capacité | Variables | | | **Pour les refroidisseurs de confort air-eau ; débit d'air, mesuré à l'extérieur.** | - | 5500 | $m^3/h$ |
| Niveau de puissance acoustique, à l'intérieur / à l'extérieur | LWA | -/66 | dB | Pour les refroidisseurs eau/glycol-eau ; débit d'eau ou de fluide caloporteur nominal, échangeur de chaleur côté extérieur | - | N/A | $m^3/h$ |
| Émissions d'oxyde d'azote (le cas échéant) | NOx(**) | - | Mg/kwh d'entrée GCV | | | | |
| GWP du fluide frigorigène | - | 675 | Kg $CO_{2\,eq}$ (100 ans) | | | | |
| Conditions de notation standard utilisées | Applications à température moyenne | | | | | | |
| Détails de contact | Consultez la couverture arrière du manuel. | | | | | | |

(**) Si Cdh n'est pas déterminé par mesure, alors le coefficient de dégradation par défaut des refroidisseurs sera de 0,9.
(**)À partir du 26 septembre 2018.

# Exigences en matière d'informations pour les refroidisseurs de confort

| | |
|---|---|
| Modèle(s): | 3 - PH 16kw (chauffage 9kw); 3 - PH 16kw (chauffage 6kw);<br>3 - PH 16kw (chauffage 3kW); 3 - PH 16kw |
| Échangeur de chaleur côté extérieur du refroidisseur | Air à eau |
| Échangeur de chaleur côté intérieur du refroidisseur | Eau |
| Type: | Compression de vapeur entraînée par compresseur |
| Entraînement du compresseur | Moteur électrique |

| Article | Symbol | Valeur | Unité | Article | Symbol | Valeur | Unité |
|---|---|---|---|---|---|---|---|
| **Puissance thermique nominale(*)** | Puissance nominale.c | 14 | kW | **Efficacité énergétique saisonnière pour le chauffage de l'espace** | $H_{s.c}$ | 186 | % |
| Capacité déclarée de refroidissement pour une charge partielle à la température extérieure donnée Tj. | | | | Rapport de l'efficacité énergétique déclarée pour le refroidissement en charge partielle à une température extérieure donnée $T_j$. | | | |
| $T_j$ = + 35°C | $P_{dc}$ | 13.8 | kW | $T_j$ =+35°C | $EER_d$ | 2.41 | - |
| $T_j$ = + 30°C | $P_{dc}$ | 10.9 | kW | $T_j$ = +30°C | $EER_d$ | 3.65 | - |
| $T_j$ = + 25°C | $P_{dc}$ | 6.9 | kW | $T_j$ = + 25°C | $EER_d$ | 5.60 | - |
| $T_j$ = + 20°C | $P_{dc}$ | 3.6 | kW | $T_j$ = + 20°C | $EER_d$ | 7.08 | - |
| Coefficient de dégradation du refroidisseur (*) | $C_{dc}$ | 0.9 | kW | | | | |
| Consommation d'énergie dans des modes autres que le "mode actif" | | | | | | | |
| Mode hors tension | $P_{OFF}$ | 0.014 | kW | Mode de chauffage du carter | $P_{ck}$ | 0.000 | KW |
| Mode thermostat éteint | $P_{TO}$ | 0.024 | kW | Mode veille | $P_{SB}$ | 0.014 | KW |
| Autres projets | | | | | | | |
| Contrôle de la capacité | Variables | | | **Pour les refroidisseurs de confort air-eau ; débit d'air, mesuré à l'extérieur.** | - | 6000 | $m^3/h$ |
| Niveau de puissance acoustique, à l'intérieur / à l'extérieur | LWA | -/68 | dB | Pour les refroidisseurs eau/glycol-eau ; débit d'eau ou de fluide caloporteur nominal, échangeur de chaleur côté extérieur | - | N/A | $m^3/h$ |
| Émissions d'oxyde d'azote (le cas échéant) | NOx(**) | - | Mg/kwh d'entrée GCV | | | | |
| GWP du fluide frigorigène | - | 675 | Kg $CO_{2\,eq}$ (100 ans) | | | | |
| Conditions de notation standard utilisées | Application à basse température | | | | | | |
| Détails de contact | Consultez la couverture arrière du manuel. | | | | | | |

(**) Si Cdh n'est pas déterminé par mesure, alors le coefficient de dégradation par défaut des refroidisseurs sera de 0,9.
(**)À partir du 26 septembre 2018.

# Exigences en matière d'informations pour les refroidisseurs de confort

| | |
|---|---|
| Modèle(s): | 3 - PH 16kw (chauffage 9kw); 3 - PH 16kw (chauffage 6kw); 3 - PH 16kw (chauffage 3kW); 3 - PH 16kw |
| Échangeur de chaleur côté extérieur du refroidisseur | Air à eau |
| Échangeur de chaleur côté intérieur du refroidisseur | Eau |
| Type: | Compression de vapeur entraînée par compresseur |
| Entraînement du compresseur | Moteur électrique |

| Article | Symbol | Valeur | Unité | Article | Symbol | Valeur | Unité |
|---|---|---|---|---|---|---|---|
| **Puissance thermique nominale(*)** | Puissance nominale.c | 16 | kW | **Efficacité énergétique saisonnière pour le chauffage de l'espace** | $H_{s.c}$ | 263 | % |
| Capacité déclarée de refroidissement pour une charge partielle à la température extérieure donnée Tj. | | | | Rapport de l'efficacité énergétique déclarée pour le refroidissement en charge partielle à une température extérieure donnée $T_j$. | | | |
| $T_j$ = + 35°C | $P_{dc}$ | 15.5 | kW | $T_j$ =+35°C | $EER_d$ | 3.35 | - |
| $T_j$ = + 30°C | $P_{dc}$ | 11.6 | kW | $T_j$ = +30°C | $EER_d$ | 4.90 | - |
| $T_j$ = + 25°C | $P_{dc}$ | 7.5 | kW | $T_j$ = + 25°C | $EER_d$ | 7.91 | - |
| $T_j$ = + 20°C | $P_{dc}$ | 5.1 | kW | $T_j$ = + 20°C | $EER_d$ | 11.29 | - |
| Coefficient de dégradation du refroidisseur (*) | $C_{dc}$ | 0.9 | kW | | | | |
| Consommation d'énergie dans des modes autres que le "mode actif" | | | | | | | |
| Mode hors tension | $P_{OFF}$ | 0.014 | kW | Mode de chauffage du carter | $P_{ck}$ | 0.000 | KW |
| Mode thermostat éteint | $P_{TO}$ | 0.024 | kW | Mode veille | $P_{SB}$ | 0.014 | KW |
| Autres projets | | | | | | | |
| Contrôle de la capacité | Variables | | | **Pour les refroidisseurs de confort air-eau ; débit d'air, mesuré à l'extérieur.** | - | 6000 | $m^3/h$ |
| Niveau de puissance acoustique, à l'intérieur / à l'extérieur | LWA | -/68 | dB | Pour les refroidisseurs eau/glycol-eau ; débit d'eau ou de fluide caloporteur nominal, échangeur de chaleur côté extérieur | - | N/A | $m^3/h$ |
| Émissions d'oxyde d'azote (le cas échéant) | NOx(**) | - | Mg/kwh d'entrée GCV | | | | |
| GWP du fluide frigorigène | - | 675 | Kg $CO_{2\,eq}$ (100 ans) | | | | |
| Conditions de notation standard utilisées | Applications à température moyenne | | | | | | |
| Détails de contact | Consultez la couverture arrière du manuel. | | | | | | |

(**) Si Cdh n'est pas déterminé par mesure, alors le coefficient de dégradation par défaut des refroidisseurs sera de 0,9.
(**)À partir du 26 septembre 2018.

TCL

Ananda GmbH

Daimlerstr. 6

D-76185 Karlsruhe

Mail:info@ananda-trading.de

The Creative Life

# Dati tecnici

# Serie Tri-Thermal

# Monoblock

# INDICE

Parte 1 Informazioni generali ..... 3
1 Sistema Tri-Thermal ..... 4
2 Capacità delle unità ..... 6
5 Applicazioni tipiche ..... 9
5.3 Riscaldamento e raffrescamento ambienti e acqua calda sanitaria ..... 11
Parte 2 Dati tecnici ..... 23
1 Specifiche ..... 24
2 Dimensioni e baricentro ..... 27
3 Schemi delle tubazioni ..... 27
4 Schemi elettrici ..... 29
5 Tabelle di capacità ..... 31
6 Limiti di funzionamento ..... 47
7 Prestazioni idroniche ..... 47
8 Livelli sonori ..... 48
9 Accessori ..... 50
Parte 3 Installazione e impostazione in loco ..... 51
1 Prefazione alla parte 3 ..... 52
2 Installazione ..... 52
3 Tubazioni acqua ..... 57
4 Cablaggi elettrici ..... 63
6 Pompa di circolazione interna ..... 66

# Parte 1 Informazioni generali

# 1 Sistema Tri-Thermal

## 1.1 Diagramma del sistema

*Figura 1-1.1: Diagramma del sistema*

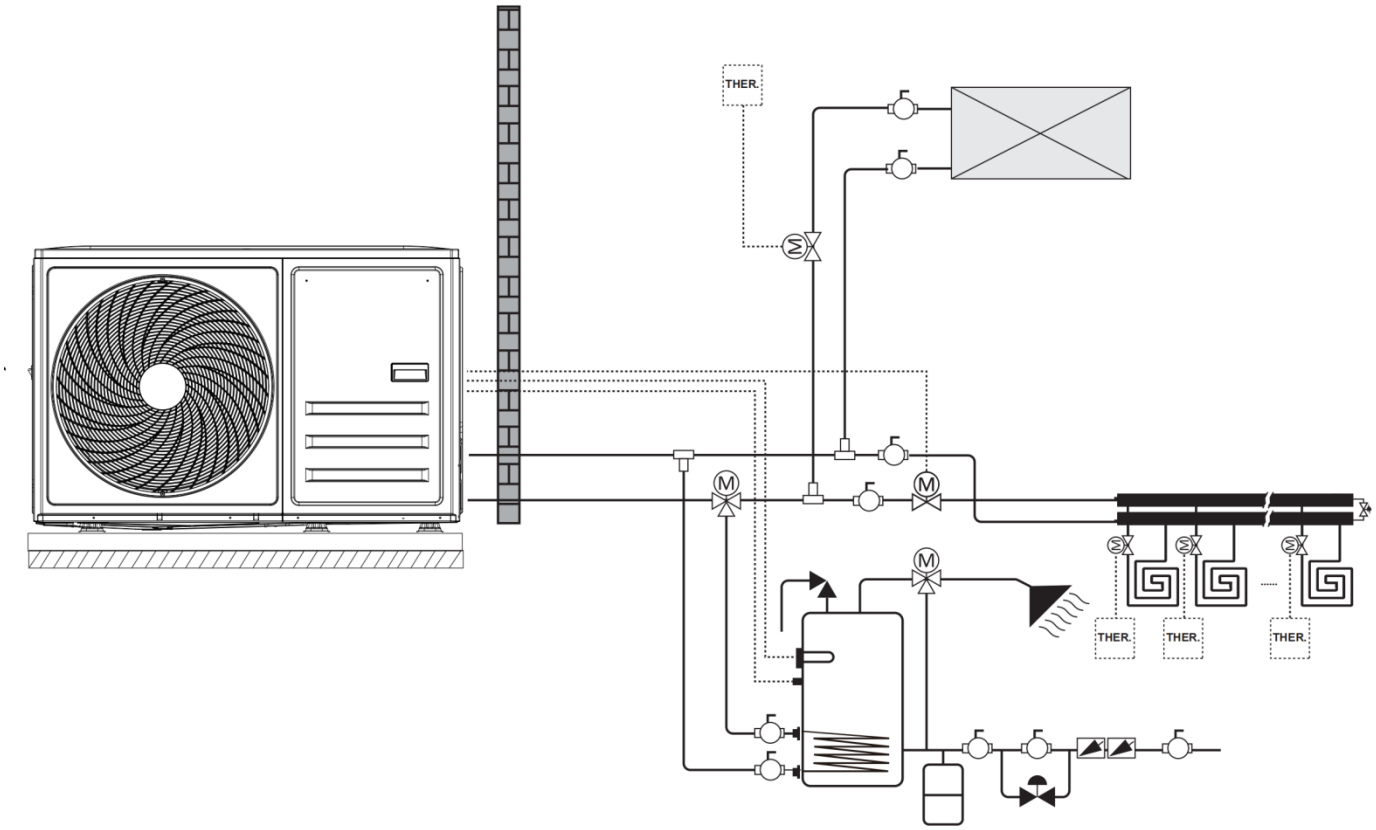


Tri-Thermal è un sistema integrato a pompa di calore aria-acqua che integra il riscaldamento, il raffrescamento e la produzione di acqua calda sanitaria. Il sistema a pompa di calore esterna estrae il calore dall'aria esterna e lo trasferisce attraverso le tubazioni del refrigerante allo scambiatore di calore a piastre nel box idronico. L'acqua riscaldata nel box idronico circola verso emettitori di calore a bassa temperatura (riscaldamento a pavimento o radiatori a bassa temperatura) per riscaldare gli ambienti e verso il serbatoio dell'acqua calda sanitaria per fornire acqua calda sanitaria. La valvola a 4 vie dell'unità esterna può invertire il ciclo del refrigerante in modo che il box idronico possa fornire acqua refrigerata per il raffrescamento mediante ventilconvettori.

La capacità di riscaldamento delle pompe di calore si riduce al diminuire della temperatura ambiente. Il riscaldatore elettrico di riserva è personalizzato per fornire una capacità di riscaldamento aggiuntiva da utilizzare in caso di temperature estremamente rigide e quando la capacità della pompa di calore è insufficiente.

## 1.2 Impianto

Tri-Thermal Mono può essere configurato per funzionare con il riscaldatore elettrico attivo o disattivato e può essere utilizzato anche in combinazione con una fonte di calore ausiliaria come scaldabagno elettrici, caldaie a gas tradizionali o boiler solari.

La scelta influisce sulla pompa di calore necessaria. I tre tipi sono descritti nel seguito. Fare riferimento alla Figura 1-1.2.

### a: Solo pompa di calore

- La pompa di calore soddisfa la domanda di capacità e non è necessaria una capacità di riscaldamento aggiuntiva.
- Richiede la scelta di una pompa di calore di capacità maggiore e comporta un investimento iniziale più elevato.

- Ideale per le nuove costruzioni in progetti in cui l'efficienza energetica è fondamentale.

### b: Pompa di calore e riscaldatore elettrico di riserva

- La pompa di calore soddisfa la domanda di capacità finché la temperatura ambiente non scende al di sotto del punto in cui la pompa di calore è in grado di fornire una capacità sufficiente. Quando la temperatura ambiente è inferiore a questo punto di equilibrio (come mostrato nella Figura 1-1.2), il riscaldatore elettrico di riserva fornisce la capacità di riscaldamento supplementare necessaria.
- Il miglior equilibrio tra investimento iniziale e costi di esercizio, con conseguente riduzione dei costi del ciclo di vita.
- Ideale per nuove costruzioni.

### c: Combinazione pompa di calore e fonte di calore ausiliaria

- La pompa di calore soddisfa la domanda di capacità finché la temperatura ambiente non scende al di sotto del punto in cui la pompa di calore è in grado di fornire una capacità sufficiente. Quando la temperatura ambiente è inferiore a questo punto di equilibrio (come mostrato nella Figura 1-1.2), a seconda delle impostazioni del sistema, la fonte di calore ausiliaria fornisce la capacità di riscaldamento aggiuntiva richiesta oppure la pompa di calore non funziona e la fonte di calore ausiliaria soddisfa l'intera capacità richiesta.
- Consente di selezionare una pompa di calore di capacità inferiore.
- Ideale per ristrutturazioni e aggiornamenti.

*Figura 1-1.2: Impianto*

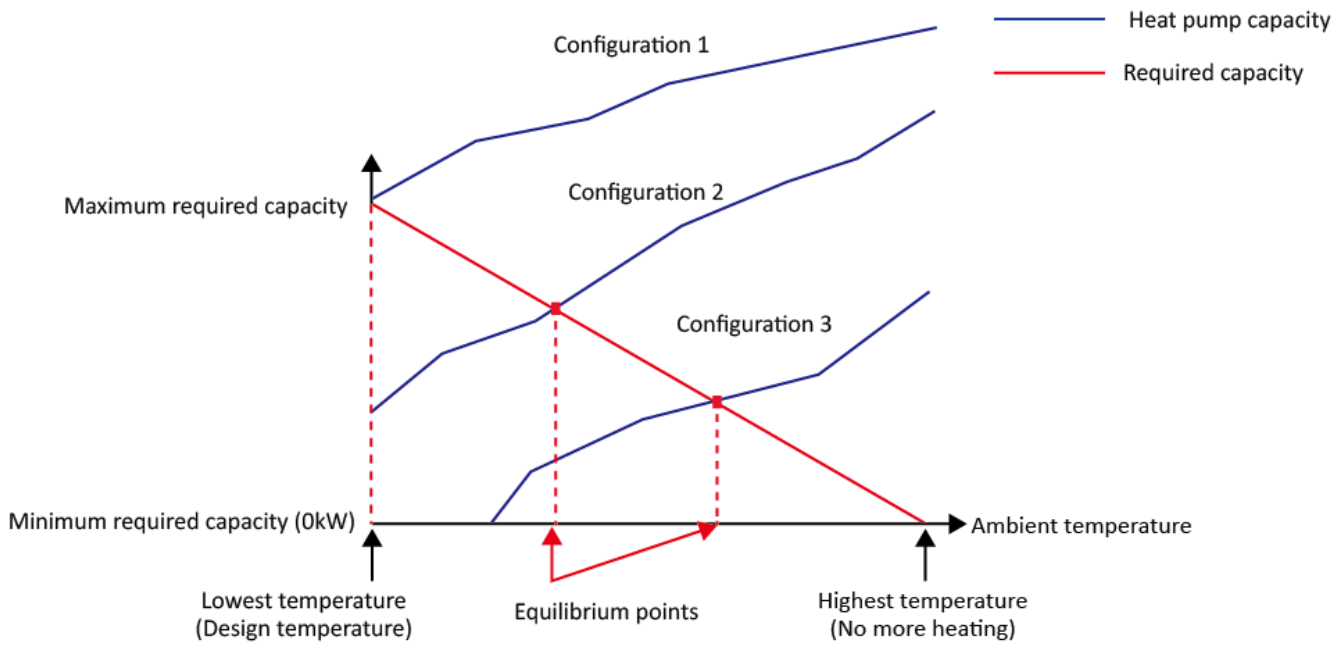

## 2 Capacità delle unità

*Tabella 1-2.1: Monoblocco*

| Capacità | 4 kW | 6 kW | 8 kW | 10 kW |
|---|---|---|---|---|
| THMLd- | 4D/3HBp-A | 6D/3HBp-A | 8D/3HBp-A | 10D/3HBp-A |
| Alimentazione (V/Ph/Hz) | 220-240/1/50 | 220-240/1/50 | 220-240/1/50 | 220-240/1/50 |
| Aspetto |  | |  | |

| Capacità | 12 kW | 14 kW | 16 kW | 12 kW | 14 kW | 16 kW |
|---|---|---|---|---|---|---|
| THMLd- | 12D/3HBp-A | 14D/3HBp-A | 16D/3HBp-A | 12S/HBp-A | 14S/HBp-A | 16S/HBp-A |
| Alimentazione (V/Ph/Hz) | 220-240/1/50 | 220-240/1/50 | 220-240/1/50 | 380-415/3/50 | 380-415/3/50 | 380-415/3/50 |
| Aspetto |  | | | | | |

Nomenclatura

## 3.1 Unità esterna

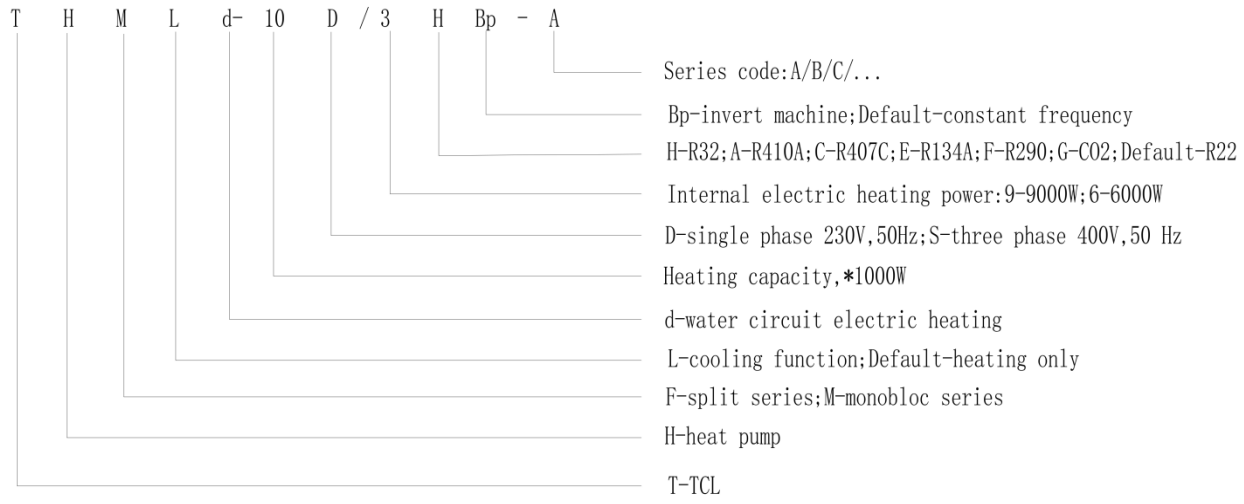

# 4 Progettazione dell'impianto e selezione delle unità

## 4.1 Procedura di selezione

### Passo 1: Calcolo del carico termico totale

Inizio della pocedura di selezione sistema Tri-Thermal Monoblock

### Passo 2: Impianto

Selezionare la superfiicie da trattare

Selezionare gli emettitori di calore (tipo, quantità, temperatura dell'acqua e carico termico)

### Passo 3: Selezione del monoblocco

Decidere se includere l'AHS e impostare la temperatura di commutazione dell'AHS Decidere se il riscaldatore elettrico di riserva è abilitato o disabilitato

Determinare il carico termico totale richiesto per il monoblocco
Definire il coefficiente di sicurezza per la capacità
Selezionare l'alimentazione elettrica

Selezionare temporaneamente la capacità dell'unità Tri-Thermal Mono in base alla capacità nominale

Correggere la capacità del monoblocco in funzione dei seguenti aspetti:

Temperatura dell'aria esterna / Umidità esterna / Temperatura dell'acqua in uscita1 / Altitudine / Liquido antigelo

otenere la capacità dell'unità Tri-Thermal Mono ≥ Carico termico totale richiesto sul monoblocco[2]

Sì

La selezione del sistema Tri-Thermal Mono è completata

No

Scegliere un modello più grande o abilitare il funzionamento del riscaldatore elettrico di riserva.

*Note:*

*1. Se le temperature dell'acqua richieste dagli emettitori di calore non sono uguali, la temperatura di uscita dell'acqua del Tri-Thermal Mono deve essere impostata sulla temperatura più alta tra quelle richieste dagli emettitori di calore. Se la temperatura di progetto dell'acqua in uscita è compresa tra due temperature elencate nella tabella di capacità dell'unità esterna, calcolare la capacità corretta per interpolazione.*

*2. Se la scelta dell'unità esterna deve basarsi sul carico totale di riscaldamento e sul carico totale di raffrescamento, selezionare unità Mono che soddisfano entrambi i requisiti di carico totale di riscaldamento e raffrescamento.*

### 4.2 Selezione della temperatura dell'acqua in uscita (LWT) dal sistema Tri-Thermal

Le temperature di mandata acqua LTW di progetto consigliati per i diversi tipi di emettitori di calore sono:

Per riscaldamento a pavimento: Da 30 a 35ºC

Per ventilconvettori: Da 30 a 45ºC

Per radiatori a bassa temperatura: Da 40 a 50ºC

### 4.3 Ottimizzazione della progettazione dell'ìmpianto

Per ottenere con Tri-Thermal il massimo comfort con il minimo consumo energetico, è importante tenere in considerazione quanto segue:

Scegliere emettitori di calore che consentano al sistema a pompa di calore di funzionare con una temperatura dell'acqua calda il più bassa possibile, garantendo comunque un riscaldamento sufficiente.

Assicurarsi di avere selezionato curva di dipendenza dalle condizioni atmosferiche adatta all'ambiente di installazione (struttura dell'edificio, clima) e alle esigenze dell'utente finale.

Il collegamento di termostati ambiente (forniti in loco) all'impianto idronico aiuta a prevenire un riscaldamento eccessivo degli ambienti, arrestando l'unità esterna e la pompa di circolazione quando la temperatura ambiente supera il valore impostato sul termostato.

## 5 Applicazioni tipiche

### 5.1 Solo acqua calda sanitaria

In caso di richiesta di riscaldamento dell'acqua calda sanitaria (ACS) da parte del comando cablato, l'unità lavora per raggiungere la temperatura target dell'acqua impostata sull'interfaccia utente. Quando la temperatura dell'acqua raggiunge la temperatura impostata dal termostato, l'unità si ferma.

*Figura 1-5.1: Riscaldamento ACS*

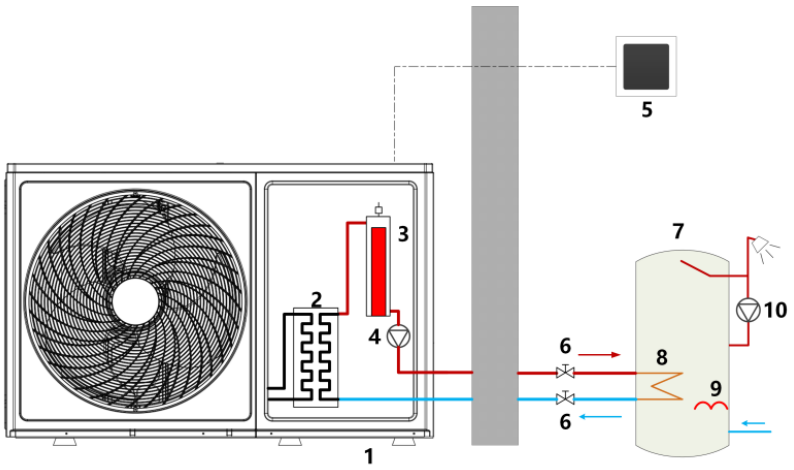

| Legenda | | | |
|---|---|---|---|
| 1 | L'unità esterna | 6 | Valvola di arresto |
| 2 | Scambiatore di calore a piastre | 7 | Serbatoio acqua calda sanitaria |
| 3 | Riscaldatore elettrico di riserva (opzionale) | 8 | Scambiatore di calore |
| 4 | Pompa di circolazione interna | 9 | Riscaldatore elettrico serbatoio acqua calda sanitaria |
| 5 | Comando cablato | 10 | Pompa di circolazione ACS |

## 5.2 Riscaldamento ambienti e acqua calda sanitaria

Impostare il controllo monozona nel comando cablato e selezionare il tipo di carico finale: uno qualsiasi tra riscaldamento a pavimento, ventilconvettore e radiatore. In presenza di acqua calda sanitaria, è installata una valvola a tre vie SV1; in caso contrario, non è necessaria.

È necessaria una pompa di circolazione esterna.

Nel comando cablato è possibile effettuare le seguenti impostazioni

① Per controllare la temperatura ambiente, è necessario collegare il sensore di temperatura ambiente interna della zona A o spostare il comando cablato nell'ambiente per il campionamento. Il comando cablato visualizzerà la temperatura ambiente.

② Se la temperatura dell'acqua è controllata, il sensore della temperatura ambiente interna della zona A non sarà attendibile; il regolatore cablato visualizzerà la temperatura dell'acqua.

③ Quando la temperatura ambiente e la temperatura dell'acqua sono controllate, la $T_{SA}$① è convertita in $T_{SA\text{-}W}$②. Se l'utente ha impostato una curva di temperatura, il funzionamento avverrà in base alla curva corrispondente; altrimenti, sarà utilizzata la curva di temperatura 4. Il comando cablato visualizza la temperatura ambiente e la temperatura dell'acqua impostate.

- In modalità di raffrescamento, utilizzare il parametro MIN ($T_{SA\text{-}W}$, $T_S$③) per controllare l'avvio e l'arresto del compressore.
- In modalità di riscaldamento, utilizzare il parametro MAX ($T_{SA\text{-}W}$, $T_S$) per controllare l'avvio e l'arresto del compressore.

Il termostato è abilitato nel comando cablato, il comando di commutazione e la selezione della modalità sono effettuati mediante il termostato.

① Quando il termostato invia un segnale C, l'unità inizia a funzionare in modalità raffrescamento.

② Quando il termostato invia un segnale H, l'unità inizia a funzionare in modalità riscaldamento.

③ Quando il termostato non invia segnali C e H, l'unità passa allo stato di spegnimento.

Quando il termostato è acceso e il comando cablato è spento, viene segnalata l'interruzione del funzionamento e il comando cablato può essere utilizzato per spegnere il controllo dopo l'annullamento del funzionamento termostato. Il controllo del termostato può controllare solo la temperatura dell'acqua; l'interruttore del termostato non influisce sul controllo dell'acqua calda sanitaria.

*Note:①Impostazione della temperatura ambiente;②Impostazione della temperatura dell'acqua corrispondente alla temperatura ambiente impostata ; ③Impostazione della temperatura dell'acqua.*

*Figura 1-5.2: Riscaldamento ambienti e acqua calda sanitaria*

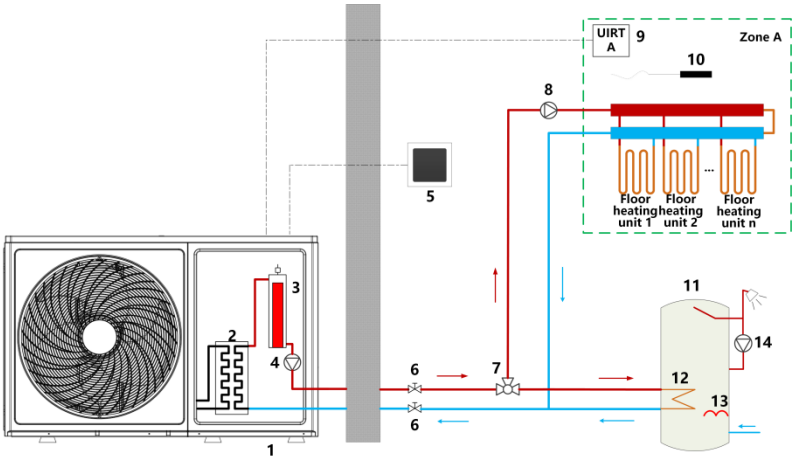


| Legenda | | | |
|---|---|---|---|
| 1 | Unità esterna | 8 | Pompa di circolazione esterna |
| 2 | Scambiatore di calore a piastre | 9 | Termostato A |
| 3 | Riscaldatore elettrico di riserva (opzionale) | 10 | Sensore di temperatura ambiente interna zona A |
| 4 | Pompa di circolazione interna | 11 | Serbatoio acqua calda sanitaria |
| 5 | Interfaccia utente | 12 | Scambiatore di calore |
| 6 | Valvola di arresto | 13 | Riscaldatore elettrico serbatoio acqua calda sanitaria |
| 7 | Valvola a tre vie SV1 | 14 | Pompa di circolazione ACS |

## 5.3 Riscaldamento e raffrescamento ambienti e acqua calda sanitaria

Il riscaldamento a pavimento è utilizzato per il riscaldamento degli ambienti, mentre i ventilconvettori sono utilizzati per il riscaldamento/raffrescamento degli ambienti. L'acqua calda sanitaria è fornita da un serbatoio dedicato.

La regolazione monozona è impostata nel comando cablato. Richiede la selezione del tipo di carico finale (riscaldamento a pavimento + ventilconvettore o radiatore + ventilconvettore) e una valvola a tre vie SV2. In presenza di acqua calda sanitaria, è installata una valvola a tre vie SV1; in caso contrario, non è necessaria. È necessaria una pompa di circolazione esterna.

Nel comando cablato è possibile effettuare le seguenti impostazioni

① Per controllare la temperatura ambiente, è necessario collegare il sensore di temperatura ambiente interna della zona A o spostare il comando cablato nell'ambiente per il campionamento. Il comando cablato visualizzerà la temperatura ambiente.

② Se la temperatura dell'acqua è controllata, il sensore della temperatura ambiente interna della zona A non sarà attendibile; il regolatore cablato visualizzerà la temperatura dell'acqua.

③ Quando la temperatura ambiente e la temperatura dell'acqua sono controllate, la $T_{SA}$ è convertita nella $T_{SA-W}$. Se l'utente ha impostato una curva di temperatura, l'impianto funzionerà secondo la curva corrispondente; altrimenti, utilizzerà la curva di temperatura 4. Il comando cablato visualizza la temperatura ambiente e la temperatura dell'acqua impostate.

- In modalità di raffrescamento, utilizzare il parametro MIN ($T_{SA-W}$, $T_S$) per controllare l'avvio e l'arresto del compressore.
- In modalità di riscaldamento, utilizzare il parametro MAX ($T_{SA-W}$, $T_S$ ) per controllare l'avvio e l'arresto del compressore.

Il termostato è abilitato nel comando cablato, il comando di commutazione e la selezione della modalità sono effettuati mediante il termostato.

① Quando il termostato invia un segnale C, l'unità inizia a funzionare in modalità raffrescamento.

② Quando il termostato invia un segnale H, l'unità inizia a funzionare in modalità riscaldamento.

③ Quando il termostato non invia segnali C e H, l'unità passa allo stato di spegnimento.

Quando il termostato è acceso e il comando cablato è spento, viene segnalata l'interruzione del funzionamento e il comando cablato può essere utilizzato per spegnere il controllo dopo l'annullamento del funzionamento termostato. Il controllo del termostato può controllare solo la temperatura dell'acqua; l'interruttore del termostato non influisce sul controllo dell'acqua calda sanitaria.

*Figura 1-5.3: Riscaldamento e raffrescamento ambienti e acqua calda sanitaria*

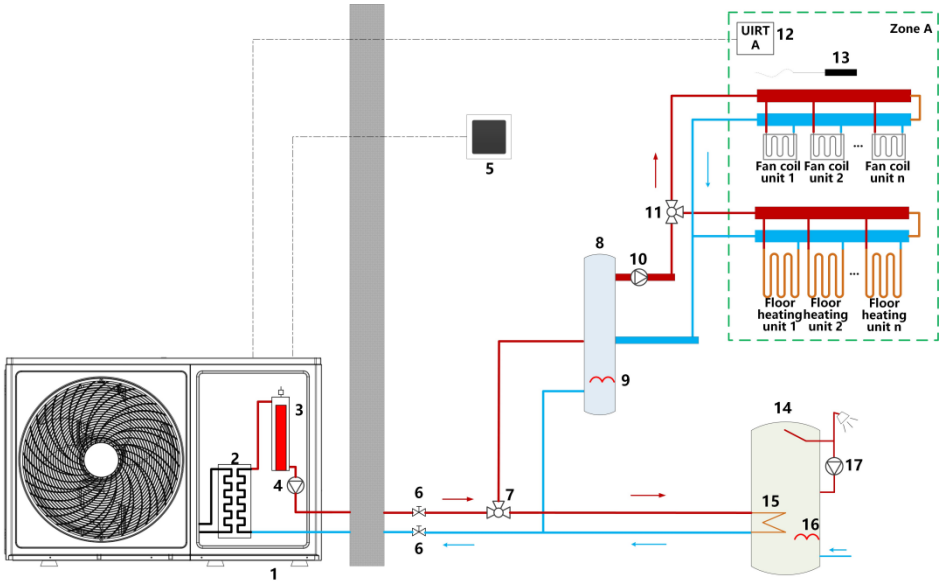


| Legenda | | | |
|---|---|---|---|
| 1 | L'unità esterna | 10 | Pompa di circolazione esterna |
| 2 | Scambiatore di calore a piastre | 1 1 | Valvola a tre vie SV3 |
| 3 | Riscaldatore elettrico di riserva (opzionale) | 1 2 | Termostato A |
| 4 | Pompa di circolazione interna | 1 3 | Sensore di temperatura ambiente interna zona A |
| 5 | Comando cablato | 1 4 | Serbatoio acqua calda sanitaria |
| 6 | Valvola di arresto | 1 5 | Scambiatore di calore |
| 7 | Valvola a tre vie SV2 | 16 | Riscaldatore elettrico serbatoio acqua calda sanitaria |
| 8 | Separatore Idraulico | 17 | Pompa di circolazione ACS |
| 9 | Riscaldatore elettrico serbatoio di accumulo | | |

## 5.4 Riscaldamento ambienti e acqua calda sanitaria (bivalente)

### 5.4.1 La fonte di calore ausiliaria provvede solo al riscaldamento degli ambienti

*Figura 1-5.4: Riscaldamento ambiente e acqua calda sanitaria con fonte di calore ausiliaria che fornisce solo il riscaldamento degli ambienti*

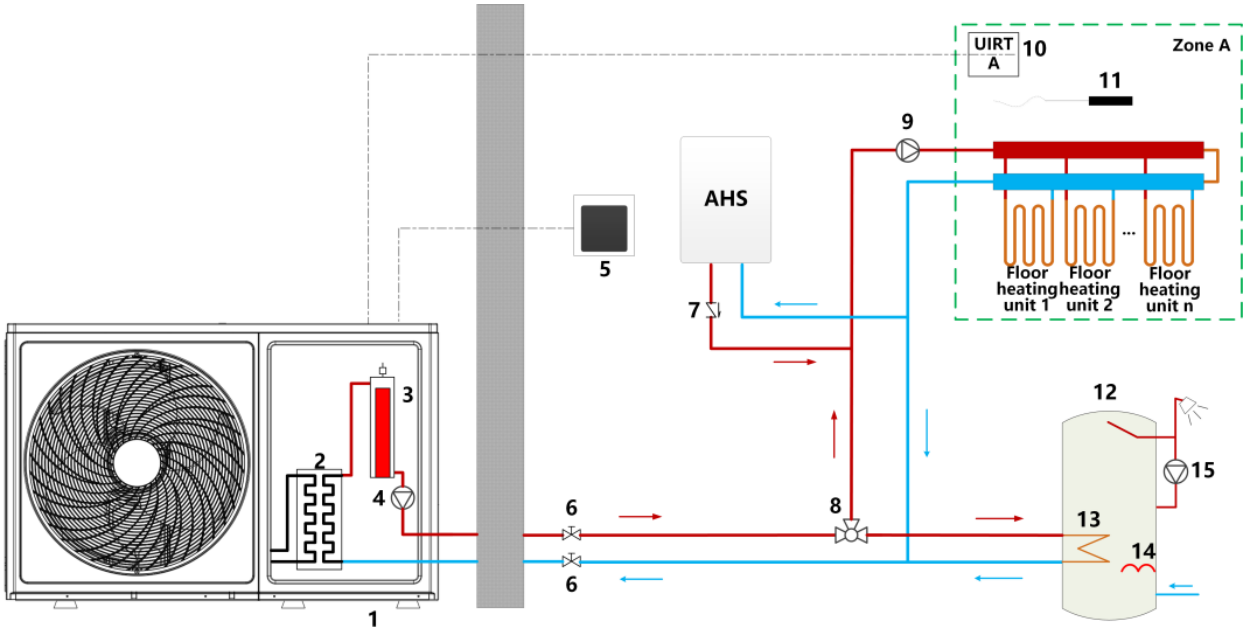


| Legenda | | | |
|---|---|---|---|
| 1 | L'unità esterna | 9 | Pompa di circolazione esterna |
| 2 | Scambiatore di calore a piastre | 1 0 | Termostato A |
| 3 | Riscaldatore elettrico di riserva (opzionale) | 1 1 | Sensore di temperatura ambiente interna zona A |
| 4 | Pompa di circolazione interna | 1 2 | Serbatoio acqua calda sanitaria |
| 5 | Comando cablato | 1 3 | Scambiatore di calore |
| 6 | Valvola di arresto | 1 4 | Riscaldatore elettrico serbatoio acqua calda sanitaria |
| 7 | Valvola di ritegno | 1 5 | Pompa di circolazione ACS |
| 8 | Valvola a tre vie SV1 | | |

### 5.4.2 La fonte di calore ausiliaria provvede al riscaldamento degli ambienti e alla produzione di acqua calda sanitaria

*Figura 1-5.5: Riscaldamento ambiente e acqua calda sanitaria con fonte di calore ausiliaria che fornisce il riscaldamento degli ambienti e acqua calda sanitaria*

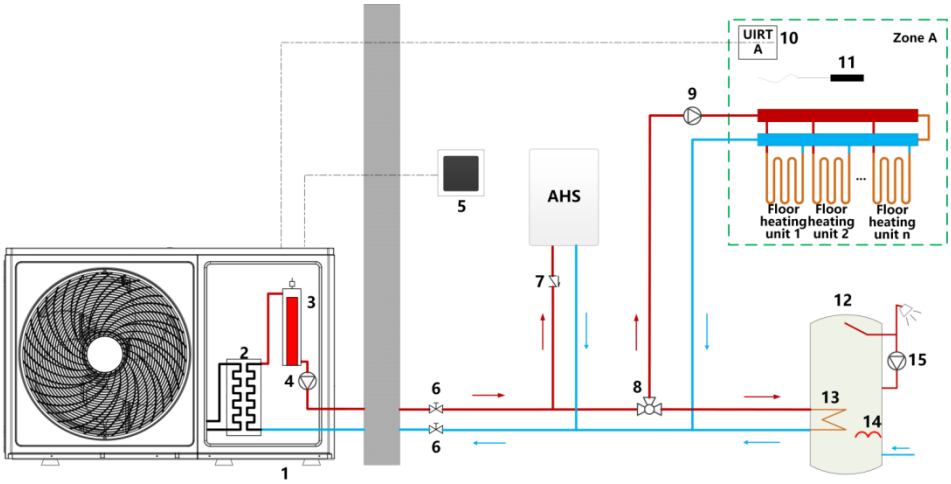


| Legenda | | | |
|---|---|---|---|
| 1 | L'unità esterna | 9 | Pompa di circolazione esterna |
| 2 | Scambiatore di calore a piastre | 10 | Termostato A |
| 3 | Riscaldatore elettrico di riserva (opzionale) | 1 1 | Sensore di temperatura ambiente interna zona A |
| 4 | Pompa di circolazione interna | 1 2 | Serbatoio acqua calda sanitaria |
| 5 | Comando cablato | 1 3 | Scambiatore di calore |
| 6 | Valvola di arresto | 1 4 | Riscaldatore elettrico serbatoio acqua calda sanitaria |
| 7 | Valvola di ritegno | 1 5 | Pompa di circolazione ACS |
| 8 | Valvola a tre vie SV1 | | |

**5.4.3 La fonte di calore ausiliaria fornisce un riscaldamento supplementare**

Se la temperatura dell'acqua in uscita dall'unità è troppo bassa per soddisfare i requisiti, l'AHS fornisce un riscaldamento supplementare per aumentare la temperatura dell'acqua fino al valore impostato. È necessaria valvola a tre vie SV2. Quando è richiesta l'assistenza di AHS, la valvola a tre vie SV2 si apre e l'acqua attraversa l'AHS per essere riscaldata ulteriormente. Quando la temperatura dell'acqua in uscita dall'unità raggiunge il valore nominale impostato, la valvola a tre vie SV2 si chiude.

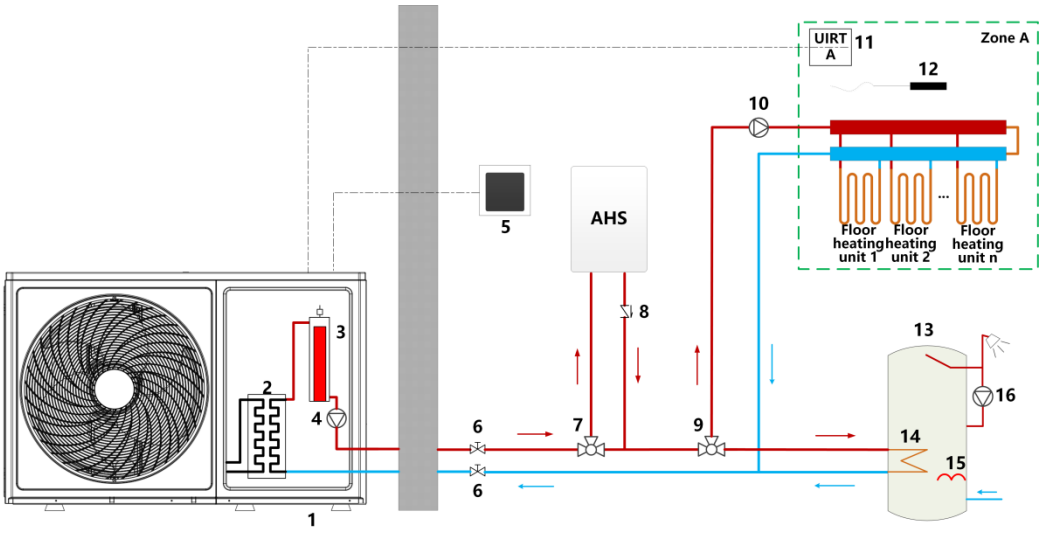


| Legenda | | | |
|---|---|---|---|
| 1 | L'unità esterna | 9 | Valvola a tre vie SV2 |
| 2 | Scambiatore di calore a piastre | 10 | Pompa di circolazione esterna |
| 3 | Riscaldatore elettrico di riserva (opzionale) | 1 1 | Termostato A |
| 4 | Pompa di circolazione interna | 1 2 | Sensore di temperatura ambiente interna zona A |
| 5 | Comando cablato | 1 3 | Serbatoio acqua calda sanitaria |
| 6 | Valvola di arresto | 1 4 | Scambiatore di calore |
| 7 | Valvola a tre vie SV1 | 1 5 | Riscaldatore elettrico serbatoio acqua calda sanitaria |
| 8 | Valvola di ritegno | 16 | Pompa di circolazione ACS |

## 5.5 Controllo a doppia zona di temperatura

*Figura 1-5.7: Riscaldamento degli ambienti tramite riscaldamento a pavimento e radiatori*

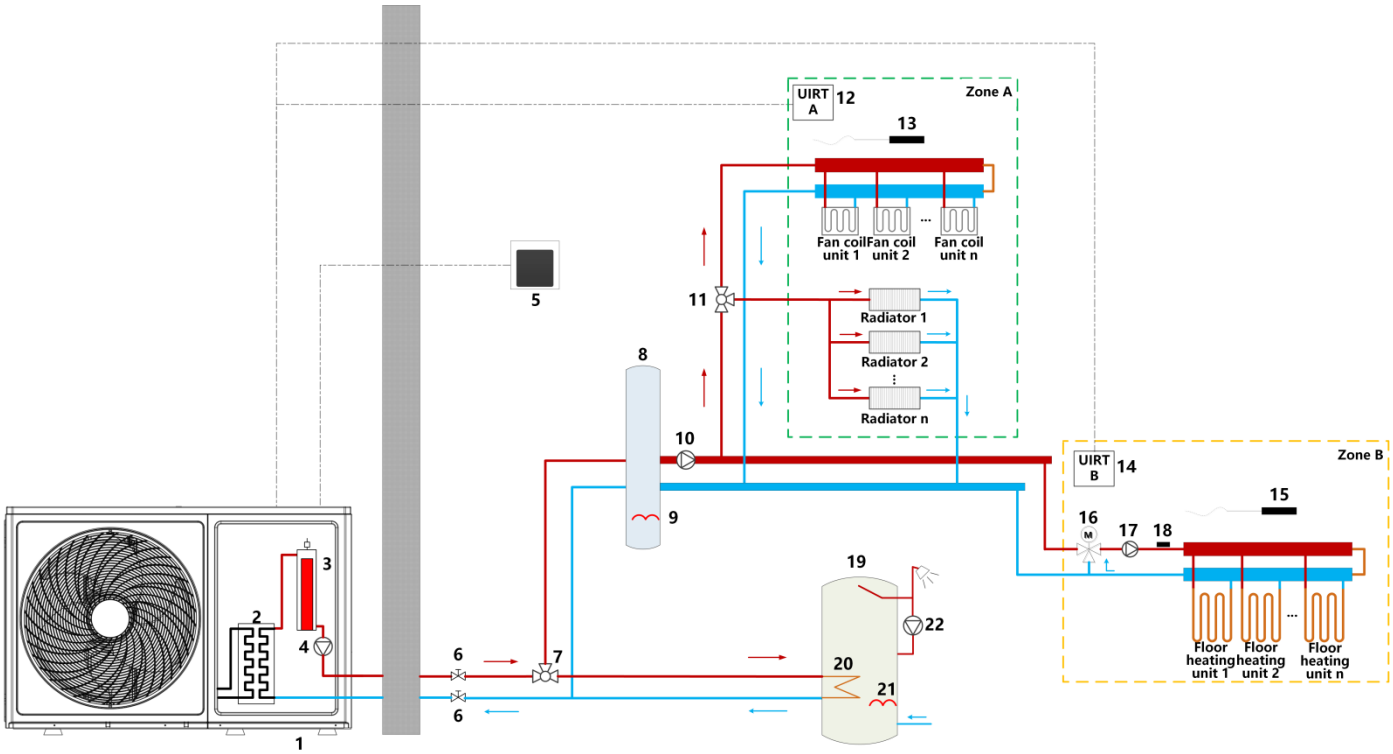


| Legenda | | | |
|---|---|---|---|
| 1 | L'unità esterna | 12 | Termostato A |
| 2 | Scambiatore di calore a piastre | 13 | Sensore di temperatura ambiente interna zona A |
| 3 | Riscaldatore elettrico di riserva (opzionale) | 1 4 | Termostato B |
| 4 | Pompa di circolazione interna | 1 5 | Sensore di temperatura ambiente interna zona B |
| 5 | Comando cablato | 1 6 | Valvola di miscelazione |
| 6 | Valvola di arresto | 17 | Pompa dell'acqua per il riscaldamento a pavimento nell'area B |
| 7 | Valvola a tre vie SV1 | 18 | Sensore di temperatura dell'acqua di riscaldamento per la zona B |
| 8 | Separatore Idraulico | 19 | Serbatoio acqua calda sanitaria |
| 9 | Riscaldatore elettrico serbatoio acqua | 20 | Scambiatore di calore |
| 10 | Pompa di circolazione esterna | 21 | Riscaldatore elettrico serbatoio acqua calda sanitaria |
| 11 | Valvola a tre vie SV2 | 22 | Pompa di circolazione ACS |

Il riscaldamento a pavimento e i ventilconvettori sono utilizzati per il riscaldamento degli ambienti, mentre i

ventilconvettori sono utilizzati per il raffrescamento degli ambienti. L'acqua calda sanitaria è fornita da un serbatoio dedicato. Nella zona A e nella zona B è possibile impostare temperature target diverse a seconda delle esigenze.

Impostare il controllo bizona nel comando cablato e selezionare il tipo di carico finale: ①Zona A: ventilconvettore + radiatore, che deve essere dotato di una valvola a tre vie SV2; ②Zona B: riscaldamento a pavimento, installare una valvola di miscelazione a monte del riscaldamento a pavimento o una valvola a tre vie + serbatoio di miscelazione (è necessario scegliere se si tratta di una valvola di miscelazione o di una valvola a tre vie + serbatoio di miscelazione sul comando cablato per realizzare il controllo). Questa zona deve inoltre essere dotata di un sensore di temperatura di ingresso dell'acqua di riscaldamento a pavimento e di una pompa per il riscaldamento a pavimento. In presenza di acqua calda sanitaria, è installata una valvola a tre vie SV1; in caso contrario, non è necessaria.

È necessaria una pompa di circolazione esterna.

Sul comando cablato è possibile effettuare separatamente le seguenti impostazioni per la zona A e la zona B.

① Per controllare la temperatura ambiente, è necessario collegare il sensore di temperatura ambiente interna della zona A o spostare il comando cablato nell'ambiente per il campionamento. Il comando cablato visualizzerà la temperatura ambiente.

② Se la temperatura dell'acqua è controllata, il sensore della temperatura ambiente interna della zona A non sarà attendibile; il regolatore cablato visualizzerà la temperatura dell'acqua.

③ Quando la temperatura ambiente e la temperatura dell'acqua sono controllate, la $T_{SA}$ è convertita in $T_{SA-W}$. Se l'utente ha impostato una curva di temperatura, il funzionamento avverrà in base alla curva corrispondente; altrimenti, sarà utilizzata la curva di temperatura 4. Il comando cablato visualizza la temperatura ambiente e la temperatura dell'acqua impostate.

- In modalità di raffrescamento, utilizzare il parametro MIN ($T_{SA-W}$, $T_S$) per controllare l'avvio e l'arresto del compressore.
- In modalità di riscaldamento, utilizzare il parametro MAX ($T_{SA-W}$, $T_S$ ) per controllare l'avvio e l'arresto del compressore.

Il termostato è abilitato nel comando cablato, il comando di commutazione e la selezione della modalità sono effettuati mediante il termostato.

① Quando un termostato qualsiasi della zona A e della zona B è acceso, l'unità si accende; quando due termostati sono spenti, l'unità si spegne.

② Quando il termostato invia un segnale C, l'unità inizia a funzionare in modalità raffrescamento;

③ Quando il termostato invia un segnale H, l'unità inizia a funzionare in modalità riscaldamento;

④ In assenza di segnali C e H sul termostato, l'unità passa allo stato di spegnimento.

⑤ Quando le modalità di impostazione dei due termostati sono diverse, il termostato valuterà quale modalità eseguire in base alla modalità automatica; in caso di incertezza sulla modalità da eseguire, funzionerà in base alla modalità di riscaldamento.

⑥ Quando il termostato è acceso e il comando cablato è spento, viene segnalata l'interruzione del funzionamento e il comando cablato può essere utilizzato per spegnere il controllo dopo l'annullamento del funzionamento termostato. Quando si seleziona il controllo con termostato, è possibile controllare solo la temperatura dell'acqua e l'interruttore del termostato non influirà sul controllo relativo all'acqua calda sanitaria.

**5.6 Riscaldamento e raffrescamento ambienti e produzione di acqua calda sanitaria compatibili con boiler solare**

Il riscaldamento a pavimento è utilizzato per il riscaldamento degli ambienti, mentre i ventilconvettori sono utilizzati per il riscaldamento/raffrescamento degli ambienti. L'acqua calda sanitaria è fornita dal serbatoio dell'acqua calda collegato sia alla scatola idronica sia al boiler solare. A seconda delle esigenze, è possibile impostare temperature target diverse per ciascuna zona di temperatura.

Impostare il controllo multizona nel comando cablato e selezionare il tipo di carico finale: ① Zona A: ventilconvettore + radiatore; la zona deve essere dotata di una valvola a tre vie SV2; ② Zona B: riscaldamento a pavimento. I installare una valvola di miscelazione dell'acqua a monte del riscaldamento a pavimento o una valvola a tre vie + serbatoio di miscelazione (è necessario scegliere se si tratta di una valvola di miscelazione o di una valvola a tre vie + serbatoio di miscelazione sul comando cablato per ottenere il controllo); inoltre la zona deve essere dotata di un sensore di temperatura di ingresso dell'acqua per il riscaldamento a pavimento e di una pompa per il riscaldamento a pavimento; ③ Zona C: tubo a pannello per riscaldamento a pavimento. Installare una valvola di miscelazione o una valvola a tre vie + serbatoio di miscelazione a monte del riscaldamento a pavimento (è necessario selezionare una valvola di miscelazione o una valvola a tre vie + serbatoio di miscelazione sul comando cablato per ottenere il controllo) e la zona deve essere dotata di un pozzetto di rilevamento della temperatura dell'acqua per il riscaldamento a pavimento e di una pompa dell'acqua per il riscaldamento a pavimento. In presenza di acqua calda sanitaria, è installata una valvola a tre vie SV1; in caso contrario, non è necessaria una pompa di circolazione esterna.

È possibile impostare separatamente le seguenti impostazioni per le zone A, B e C tramite il comando cablato.

① Per controllare la temperatura ambiente, è necessario collegare il sensore di temperatura ambiente interna della zona A o spostare il comando cablato nell'ambiente per il campionamento. Il comando cablato visualizzerà la temperatura ambiente.

② Se la temperatura dell'acqua è controllata, il sensore della temperatura ambiente interna della zona A non sarà attendibile; il regolatore cablato visualizzerà la temperatura dell'acqua.

③ Quando la temperatura ambiente e la temperatura dell'acqua sono controllate, la $T_{SA}$ è convertita in $T_{SA-W}$. Se l'utente ha impostato una curva di temperatura, il funzionamento avverrà in base alla curva corrispondente; altrimenti, sarà utilizzata la curva di temperatura 4. Il comando cablato visualizza la temperatura ambiente e la temperatura dell'acqua impostate.

- In modalità di raffrescamento, utilizzare il parametro MIN ($T_{SA}$, $T_S$) per controllare l'avvio e l'arresto del compressore.
- In modalità di riscaldamento, utilizzare il parametro MAX ($T_{SA}$, $T_S$) per controllare l'avvio e l'arresto del compressore.

Il termostato è abilitato nel comando cablato, il comando di commutazione e la selezione della modalità sono effettuati mediante il termostato.

① Quando un termostato qualsiasi è acceso, l'unità si accende; quando tutti termostati sono spenti, l'unità si spegne.

② Quando il termostato invia un segnale C, l'unità inizia a funzionare in modalità raffrescamento.

③ Quando il termostato invia un segnale H, l'unità inizia a funzionare in modalità riscaldamento;

④ In assenza di segnali C e H sul termostato, l'unità passa allo stato di spegnimento.

⑤ Quando le modalità di impostazione dei due termostati sono diverse, il termostato valuterà quale modalità eseguire in base alla modalità automatica; in caso di incertezza sulla modalità da eseguire, funzionerà in base alla modalità di riscaldamento.

⑥ Quando il termostato è acceso e il comando cablato è spento, viene segnalata l'interruzione del funzionamento e il comando cablato può essere utilizzato per spegnere il controllo dopo l'annullamento del funzionamento termostato. Quando si seleziona il controllo con termostato, è possibile controllare solo la temperatura dell'acqua e l'interruttore del termostato non influirà sul controllo relativo all'acqua calda sanitaria.

*Figura 1-5.8: Riscaldamento e raffrescamento ambienti e produzione di acqua calda sanitaria compatibile con boiler solare*

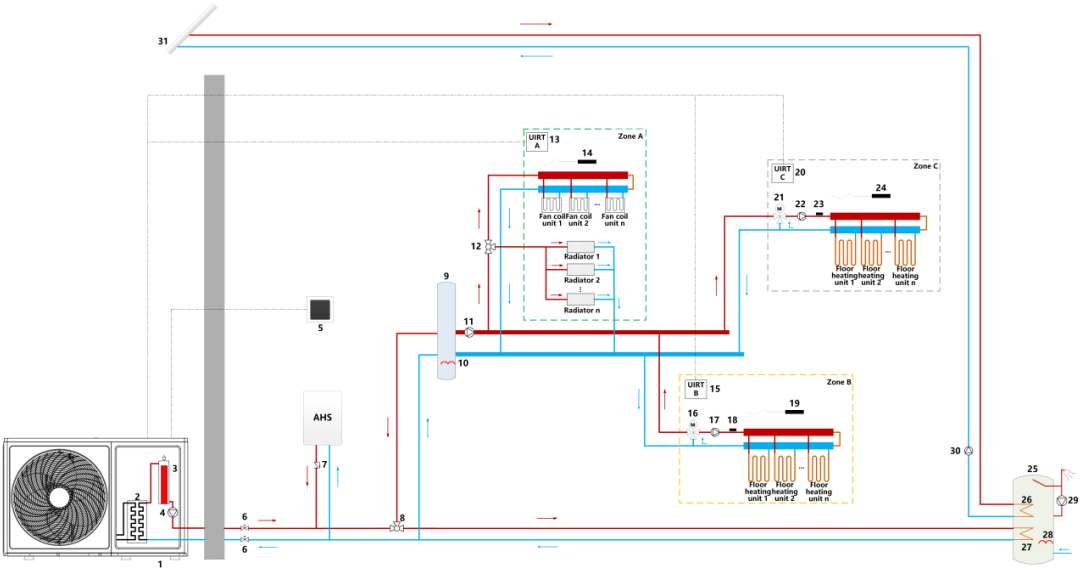


| Legenda | | | |
|---|---|---|---|
| 1 | L'unità esterna | 17 | Pompa dell'acqua per il riscaldamento a pavimento zona B |
| 2 | Scambiatore di calore a piastre | 18 | Sensore di temperatura dell'acqua di riscaldamento per la zona B |
| 3 | Riscaldatore elettrico di riserva (opzionale) | 19 | Sensore di temperatura ambiente interna zona B |
| 4 | Pompa di circolazione interna | 20 | Termostato C |
| 5 | Comando cablato | 21 | Valvola di miscelazione zona C |
| 6 | Valvola di arresto | 22 | Pompa dell'acqua per il riscaldamento a pavimento zona C |
| 7 | Valvola di ritegno | 23 | Sensore di temperatura ingresso acqua riscaldamento a pavimento zona C |
| 8 | Valvola a tre vie SV1 | 24 | Sensore di temperatura ambiente interna zona C |
| 9 | Separatore Idraulico | 25 | Serbatoio acqua calda sanitaria |
| 10 | Riscaldatore elettrico serbatoio tampone acqua | 26 | Scambiatore di calore solare |
| 11 | Pompa di circolazione esterna | 27 | Scambiatore di calore acqua calda |
| 12 | Valvola a tre vie SV2 | 28 | Riscaldatore elettrico serbatoio acqua calda sanitaria |
| 13 | Termostato A | 29 | Pompa di circolazione ACS |
| 1 4 | Sensore di temperatura ambiente interna zona A | 30 | Pompa dell'acqua a energia solare |
| 1 5 | Termostato B | 31 | Collettore solare |

| | | | |
|---|---|---|---|
| 1 6 | Valvola di miscelazione per zona B | | |

*Nota:*

*Requisiti per il volume del serbatoio di bilanciamento.*

*Per* THMLd-4(6,8,10)D/3HBp-A*, volume del serbatoio di bilanciamento ≥ 25 l*

*Per*THMLd-4(6,8,10)D/3HBp-A*, volume del serbatoio di bilanciamento ≥ 40 l*

# Parte 2 Dati tecnici

## 1 Specifiche

*Tabella 2-1.1: Specifiche THMLd-4(6,8,10)D/HBp-A[1]*

| Nome modello | | | THMLd-4D/3HBp-A | THMLd-6D/3HBp-A | THMLd-8D/3HBp-A | THMLd-10D/3HBp-A |
|---|---|---|---|---|---|---|
| Alimentazione | V/Ph/Hz | | 220-240/1/50 | | 220-240/1/50 | |
| Riscaldamento A7W35 | Capacità | kW | 4.10 | 6.10 | 8.00 | 9.50 |
| | Potenza in ingresso nominale | kW | 0.81 | 1.21 | 1.60 | 1.98 |
| | COP | | 5.06 | 5.04 | 5.00 | 4.80 |
| Riscaldamento A7W45 | Capacità | kW | 4.30 | 6.30 | 8.00 | 9.50 |
| | Potenza in ingresso nominale | kW | 1.15 | 1.71 | 2.11 | 2.60 |
| | COP | | 3.74 | 3.68 | 3.80 | 3.65 |
| Riscaldamento A7W55 | Capacità | kW | 4.40 | 6.10 | 7.40 | 9.00 |
| | Potenza in ingresso nominale | kW | 1.51 | 2.05 | 2.38 | 3.00 |
| | COP | | 2.91 | 2.98 | 3.11 | 3.00 |
| Raffrescamento A35W18 | Capacità | kW | 4.50 | 6.55 | 8.00 | 9.50 |
| | Potenza in ingresso nominale | kW | 0.83 | 1.35 | 1.67 | 2.07 |
| | EER | | 5.42 | 4.85 | 4.80 | 4.60 |
| Raffrescamento A35W7 | Capacità | kW | 4.60 | 6.95 | 7.00 | 8.00 |
| | Potenza in ingresso nominale | kW | 1.35 | 2.34 | 2.14 | 2.53 |
| | EER | | 3.41 | 2.97 | 3.27 | 3.16 |
| Classe di efficienza energetica stagionale per il riscaldamento degli ambienti | LWT a 35°C | | A+++ | | | |
| | LWT a 55°C | | A++ | | | |
| SCOP | LWT a 35°C | | 4.75 | 4.82 | 4.90 | 4.87 |
| | LWT a 55°C | | 3.27 | 3.48 | 3.44 | 3.41 |
| Livello di potenza sonora[3] | Riscaldamento A7W35 | dB | 56 | 58 | 60 | 61 |
| Refrigerante (R32) | | | 1.25kg | 1.25kg | 1.40kg | 1.40kg |
| Dimensioni unità (LxAxP) | | mm | 1220×704×390 | | 1293×860×494 | |
| Dimensioni imballaggio (LxAxP) | | mm | 1315×810×430 | | 1395×996×535 | |

| | | | | |
|---|---|---|---|---|
| Peso netto/lordo | | kg | 74.0/97.0 | 95.0/116.0 |
| Campo di funzionamento | Raffrescamento | °C | -5～43 | |
| | Riscaldamento | °C | -25～35 | |
| | ACS | °C | -25～43 | |
| Scambiatore di calore lato acqua | | | Tipo a piastre | |
| Connessione lato acqua | | | R1" | R5/4" |
| Uscita acqua | Raffrescamento | °C | 5～20 | |
| | Riscaldamento | °C | 25～65 | |
| | ACS | °C | 20～60 | |

*Tabella 2-1.1: Specifiche THMLd-12(14,16)D/HBp-A、THMLd-12(14,16)S/HBp-A1*

| Nome modello | | | THMLd-12D /3HBp-A | THMLd-14D/ 3HBp-A | THMLd-16 D/3HBp-A | THMLd-12S /6(9)HBp-A | THMLd-14D /6(9)HBp-A | THMLd-16D /6(9)HBp-A |
|---|---|---|---|---|---|---|---|---|
| Alimentazione | V/Ph/Hz | | 220-240/1/50 | | | 380-415/3/50 | | |
| Riscaldamento A7W35 | Capacità | kW | 12.10 | 14.50 | 16.00 | 12.10 | 14.50 | 16.00 |
| | Potenza in ingresso nominale | kW | 2.42 | 3.05 | 3.54 | 2.42 | 3.05 | 3.54 |
| | COP | | 5.00 | 4.75 | 4.52 | 5.00 | 4.75 | 4.52 |
| Riscaldamento A7W45 | Capacità | kW | 12.05 | 14.25 | 16.00 | 12.05 | 14.25 | 16.00 |
| | Potenza in ingresso nominale | kW | 3.14 | 3.83 | 4.42 | 3.14 | 3.83 | 4.42 |
| | COP | | 3.84 | 3.73 | 3.62 | 3.84 | 3.73 | 3.62 |
| Riscaldamento A7W55 | Capacità | kW | 12.00 | 14.00 | 16.00 | 12.00 | 14.00 | 16.00 |
| | Potenza in ingresso nominale | kW | 3.85 | 4.65 | 5.49 | 3.85 | 4.65 | 5.49 |
| | COP | | 3.12 | 3.01 | 2.91 | 3.12 | 3.01 | 2.91 |
| Raffrescamento A35W18 | Capacità | kW | 12.00 | 13.50 | 15.00 | 12.00 | 13.50 | 15.00 |
| | Potenza in ingresso nominale | kW | 3.00 | 3.60 | 4.39 | 3.00 | 3.60 | 4.39 |
| | EER | | 4.00 | 3.75 | 3.42 | 4.00 | 3.75 | 3.42 |
| Raffrescamento A35W7 | Capacità | kW | 11.60 | 12.95 | 14.30 | 11.60 | 12.95 | 14.30 |
| | Potenza in ingresso nominale | kW | 4.20 | 4.98 | 5.70 | 4.20 | 4.98 | 5.70 |

| | | | | | | | | |
|---|---|---|---|---|---|---|---|---|
| | EER | | 2.76 | 2.60 | 2.51 | 2.76 | 2.60 | 2.51 |
| Classe di efficienza energetica stagionale per il riscaldamento degli ambienti | LWT a 35°C | | A+++ | | | | | |
| | LWT a 55°C | | A++ | | | | | |
| SCOP | LWT a 35°C | | 4.70 | 4.58 | 4.56 | 4.70 | 4.58 | 4.56 |
| | LWT a 55°C | | 3.48 | 3.35 | 3.44 | 3.48 | 3.35 | 3.44 |
| Livello di potenza sonora[3] | Riscaldamento A7W35 | dB | 64 | 66 | 68 | 64 | 66 | 68 |
| Refrigerante (R32) | | | 1.74kg | 1.74kg | 1.74kg | 1.74kg | 1.74kg | 1.74kg |
| Dimensioni unità (LxAxP) | | mm | 1293×860×494 | | | | | |
| Dimensioni imballaggio (LxAxP) | | mm | 1395×996×535 | | | | | |
| Peso netto/lordo | | kg | 112.0/133.0 | | | 112.0/133.0 | | |
| Campo di funzionamento | Raffrescamento | °C | -5～43 | | | | | |
| | Riscaldamento | °C | -25～35 | | | | | |
| | ACS | °C | -25～43 | | | | | |
| Scambiatore di calore lato acqua | | | Tipo a piastre | | | | | |
| Connessione lato acqua | | | R5/4" | | | | | |
| Uscita acqua | Raffrescamento | °C | 5～20 | | | | | |
| | Riscaldamento | °C | 25～65 | | | | | |
| | ACS | °C | 20～60 | | | | | |

Nota: 1.Norme e legislazione UE pertinenti: EN14511; EN14825; EN50564; EN12102; (EU) No 811:2013; (EU) No 813:2013; OJ 2014/C 207/02:2014.

2.Classe di efficienza energetica per il riscaldamento stagionale degli ambienti, testata in condizioni climatiche medie.

3.Norma di prova: EN12102- 1

4 Il livello di pressione sonora è il valore massimo testato nelle due condizioni A7W35 e A35W18.

## 2 Dimensioni e baricentro

*Figura 2-2.1: Dimensioni e baricentro di THMLd-4(6)D/HBp-A (unità di misura: mm)*

*Figura 2-2.1: Dimensioni e baricentro di THMLd-8(10)D/HBp-A, THMLd-12(14,16)D/HBp-A,THF-12(14,16)S/HBp-A (unità di misura: mm)*

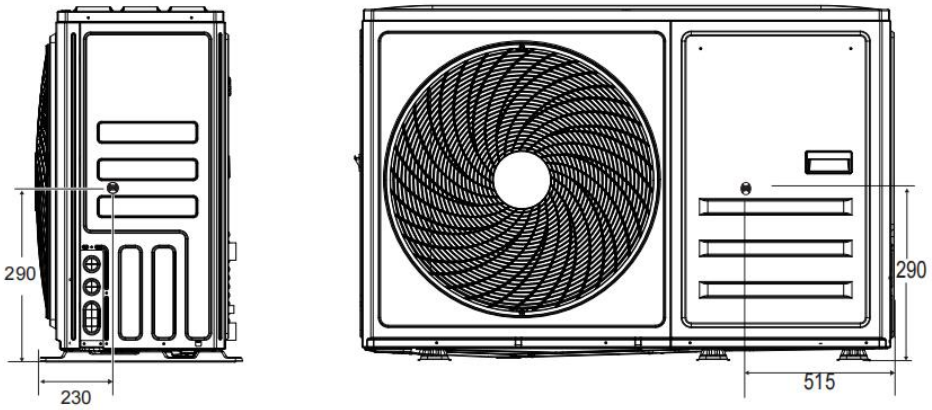


## 3 Schemi delle tubazioni

### 3.1 Unità esterna

*Figura 2-3.1: Schema delle tubazioni delle unità*

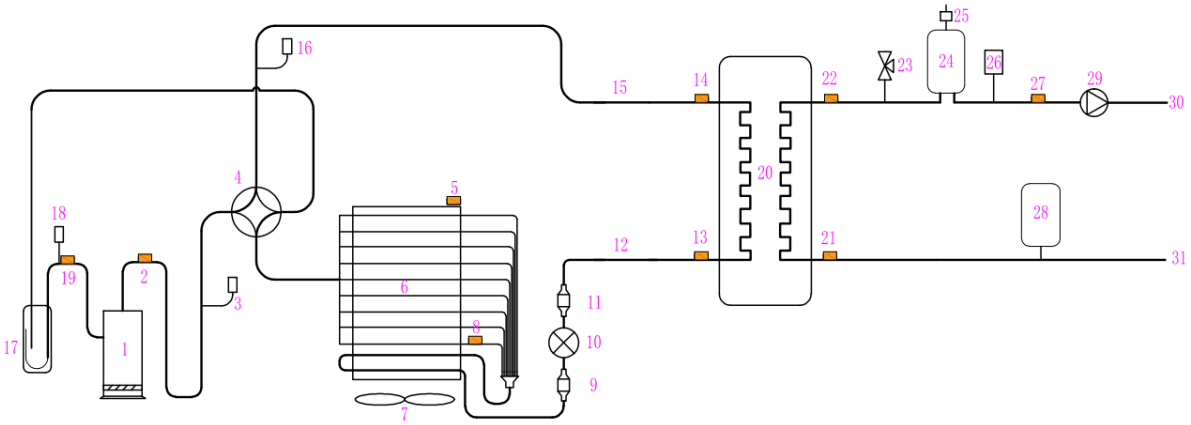


| Legenda | | | |
|---|---|---|---|
| 1 | Compressore | 17 | Separatore gas-liquido |
| 2 | Sensore di temperatura in aspirazione | 18 | Pressostato di bassa pressione (opzionale) |
| 3 | Pressostato di alta pressione (opzionale) | 19 | Sensore di temperatura in aspirazione |

| | | | |
|---|---|---|---|
| 4 | Valvola a quattro vie | 20 | Scambiatore di calore a piastre |
| 5 | Sensore di temperatura ambiente | 21 | Sensore di temperatura acqua in ingresso allo scambiatore di calore a piastre |
| 6 | Condensatore | 22 | Sensore di temperatura acqua in uscita dallo scambiatore di calore a piastre |
| 7 | Ventola | 23 | Valvola di sicurezza |
| 8 | Sensore di temperatura tubi condensatore | 24 | Riscaldatore elettrico ausiliario |
| 9 | Filtro | 25 | Valvola di scarico automatica |
| 10 | Valvola di espansione elettronica | 26 | Flussostato |
| 11 | Filtro | 27 | Sensore di temperatura di uscita totale acqua |
| 12 | Lato refrigerante liquido | 28 | Vaso di espansione |
| 13 | Sensore di temperatura del tubo del refrigerante liquido (modalità riscaldamento) | 29 | Pompa dell'acqua |
| 14 | Sensore di temperatura del tubo del refrigerante gassoso (modalità riscaldamento) | 30 | Acqua in uscita |
| 15 | Lato refrigerante gassoso | 31 | Acqua in ingresso |
| 16 | Sensore di pressione | | |

# 4 Schemi elettrici

## 4.1 Unità esterna

### THMLd-8(10)D/HBp-A, THMLd-12(14,16)D/HBp-A

*Figura 2-4.1: Schema elettrico THF-8(10)D/HBp-A, THF-12(14,16)D/HBp-A*

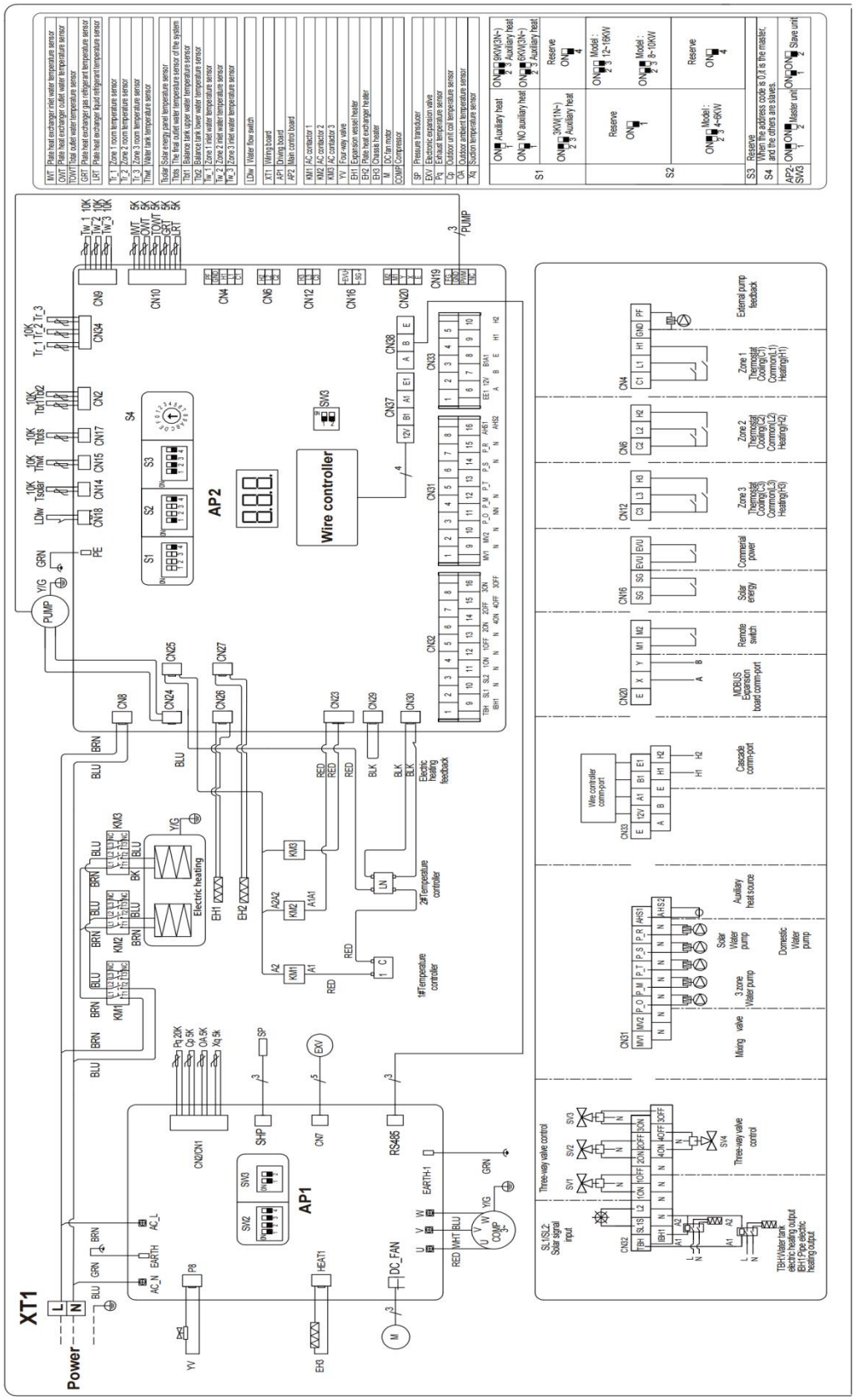

*Figura 2-4.1: Schema elettrico HF-12(14,16)S/HBp-A*

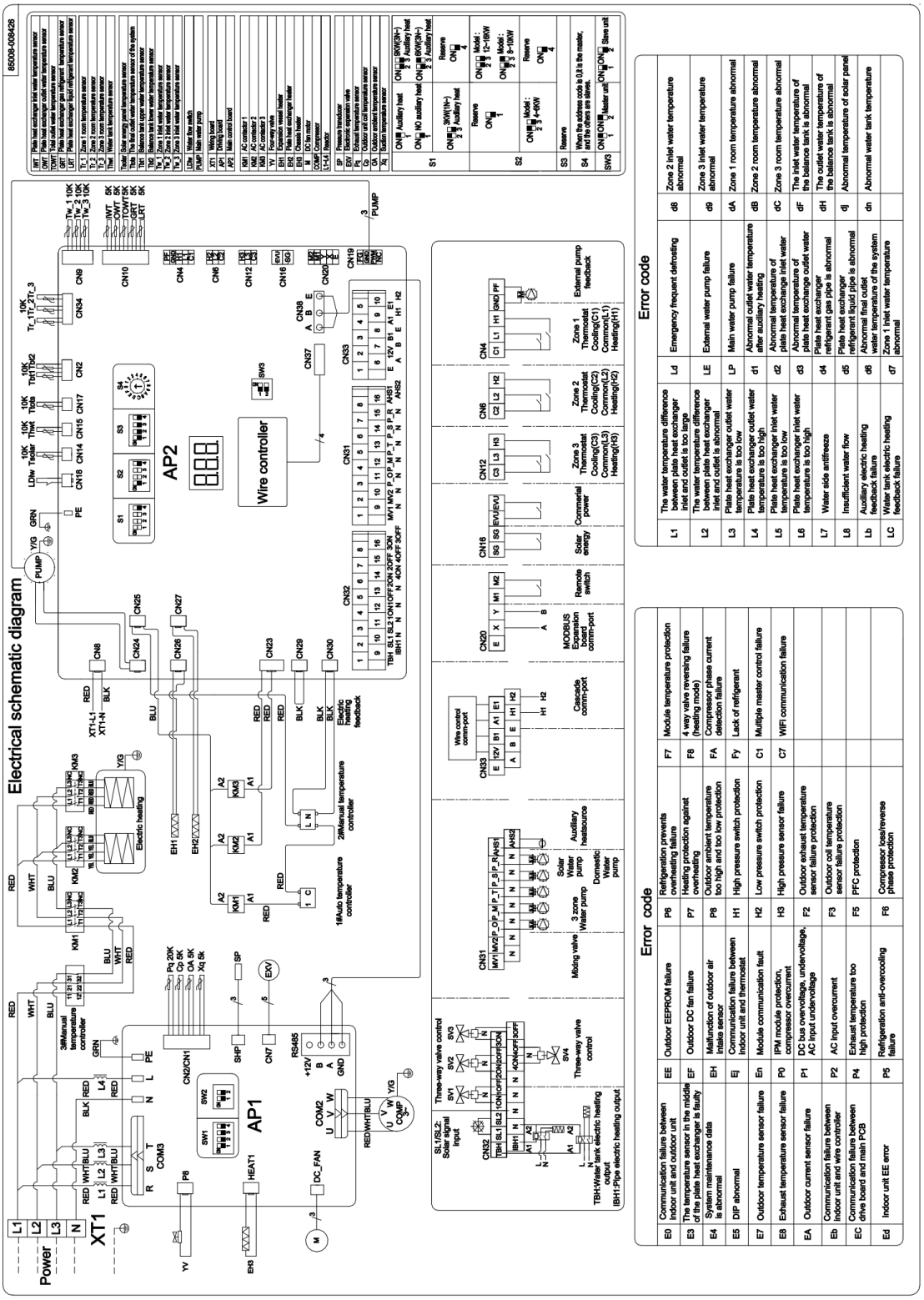


Line –FACTORY CONNECTION
Wire –FACTORY CONNECTION

# 5 Tabelle di capacità

## 5.1 Tabelle per la capacità di riscaldamento (Norma di prova: EN14511)

*Tabella 2-5.1: Capacità di riscaldamento per THMLd-8D/HBp-A*

| DB | | LWT | | | | | | | | | | | | | | | | | | | | | | | | | | |
|---|---|---|---|---|---|---|---|---|---|---|---|---|---|---|---|---|---|---|---|---|---|---|---|---|---|---|---|---|
| | | 25 | | | 30 | | | 35 | | | 40 | | | 45 | | | 50 | | | 55 | | | 60 | | | 65 | | |
| | livello HC | HC | PI | COP | HC | PI | COP | HC | PI | COP | HC | PI | COP | HC | PI | COP | HC | PI | COP | HC | PI | COP | HC | PI | COP | HC | PI | COP |
| -25 | max | 4.36 | 2.04 | 2.14 | 3.92 | 2.08 | 1.88 | 3.55 | 2.28 | 1.56 | 3.29 | 2.21 | 1.49 | 2.75 | 2.21 | 1.24 | / | / | / | / | / | / | / | / | / | / | / | / |
| | norm | 4.03 | 1.84 | 2.18 | 3.61 | 1.86 | 1.94 | 3.24 | 2.04 | 1.59 | 3.06 | 2.05 | 1.49 | 2.59 | 2.09 | 1.24 | / | / | / | / | / | / | / | / | / | / | / | / |
| | min | 2.62 | 1.18 | 2.21 | 2.43 | 1.23 | 1.97 | 2.46 | 1.52 | 1.62 | 2.34 | 1.55 | 1.51 | 1.73 | 1.40 | 1.24 | / | / | / | / | / | / | / | / | / | / | / | / |
| -20 | max | 5.57 | 2.09 | 2.66 | 4.99 | 2.19 | 2.27 | 4.69 | 2.33 | 2.01 | 4.26 | 2.51 | 1.69 | 3.63 | 2.34 | 1.55 | 3.11 | 2.31 | 1.35 | 2.58 | 2.12 | 1.22 | / | / | / | / | / | / |
| | norm | 5.10 | 1.84 | 2.76 | 4.54 | 1.94 | 2.34 | 4.23 | 2.05 | 2.06 | 3.90 | 2.27 | 1.72 | 3.36 | 2.15 | 1.56 | 2.90 | 2.12 | 1.37 | 2.48 | 2.02 | 1.23 | / | / | / | / | / | / |
| | min | 3.12 | 1.11 | 2.80 | 2.70 | 1.13 | 2.38 | 2.72 | 1.29 | 2.11 | 2.72 | 1.56 | 1.75 | 2.24 | 1.43 | 1.57 | 2.15 | 1.55 | 1.38 | 1.88 | 1.53 | 1.23 | / | / | / | / | / | / |
| -15 | max | 6.76 | 2.13 | 3.17 | 6.31 | 2.28 | 2.76 | 6.05 | 2.61 | 2.32 | 5.49 | 2.54 | 2.16 | 5.18 | 2.70 | 1.92 | 4.58 | 2.75 | 1.66 | 4.87 | 2.95 | 1.65 | 3.99 | 2.90 | 1.38 | / | / | / |
| | norm | 6.12 | 1.84 | 3.32 | 5.68 | 1.99 | 2.86 | 5.40 | 2.24 | 2.41 | 4.97 | 2.25 | 2.21 | 4.60 | 2.36 | 1.95 | 4.08 | 2.41 | 1.69 | 4.49 | 2.68 | 1.68 | 3.72 | 2.69 | 1.38 | / | / | / |
| | min | 3.16 | 0.93 | 3.40 | 3.06 | 1.05 | 2.91 | 2.88 | 1.16 | 2.47 | 3.08 | 1.35 | 2.28 | 3.31 | 1.67 | 1.98 | 3.16 | 1.84 | 1.72 | 3.31 | 1.94 | 1.71 | 2.84 | 2.03 | 1.40 | / | / | / |
| -10 | max | 7.30 | 2.08 | 3.51 | 7.13 | 2.22 | 3.21 | 7.01 | 2.34 | 3.00 | 6.77 | 2.71 | 2.50 | 6.63 | 2.79 | 2.37 | 6.19 | 2.94 | 2.11 | 5.99 | 3.08 | 1.94 | 5.20 | 2.92 | 1.78 | / | / | / |
| | norm | 6.53 | 1.76 | 3.71 | 6.35 | 1.90 | 3.35 | 6.19 | 2.00 | 3.10 | 6.07 | 2.37 | 2.56 | 6.02 | 2.51 | 2.40 | 5.64 | 2.63 | 2.14 | 5.45 | 2.78 | 1.96 | 4.78 | 2.70 | 1.77 | / | / | / |
| | min | 2.90 | 0.76 | 3.81 | 2.78 | 0.81 | 3.45 | 2.77 | 0.87 | 3.17 | 3.52 | 1.34 | 2.63 | 4.02 | 1.64 | 2.45 | 4.20 | 1.92 | 2.19 | 4.14 | 2.07 | 2.00 | 3.72 | 2.06 | 1.81 | / | / | / |
| -7 | max | 7.49 | 2.09 | 3.58 | 7.32 | 2.24 | 3.26 | 7.20 | 2.35 | 3.06 | 6.95 | 2.72 | 2.56 | 6.80 | 2.82 | 2.42 | 6.35 | 2.95 | 2.15 | 6.13 | 3.10 | 1.98 | 5.33 | 2.94 | 1.81 | / | / | / |
| | norm | 7.12 | 1.88 | 3.78 | 6.97 | 2.05 | 3.40 | 7.10 | 2.27 | 3.13 | 6.62 | 2.47 | 2.68 | 6.47 | 2.64 | 2.45 | 6.05 | 2.72 | 2.22 | 6.06 | 3.03 | 2.00 | 5.08 | 2.74 | 1.85 | / | / | / |
| | min | 1.79 | 0.46 | 3.87 | 1.69 | 0.48 | 3.52 | 1.80 | 0.55 | 3.27 | 3.08 | 1.10 | 2.79 | 3.34 | 1.31 | 2.56 | 3.31 | 1.47 | 2.26 | 3.52 | 1.69 | 2.09 | 3.42 | 1.82 | 1.89 | / | / | / |
| -5 | max | 7.89 | 2.06 | 3.83 | 7.81 | 2.20 | 3.55 | 7.61 | 2.49 | 3.06 | 7.35 | 2.65 | 2.77 | 7.29 | 2.83 | 2.58 | 7.20 | 3.05 | 2.36 | 6.36 | 2.97 | 2.14 | 6.05 | 3.06 | 1.98 | / | / | / |
| | norm | 7.11 | 1.76 | 4.03 | 6.97 | 1.90 | 3.67 | 6.62 | 2.08 | 3.18 | 6.47 | 2.20 | 2.93 | 6.36 | 2.38 | 2.68 | 6.16 | 2.53 | 2.44 | 5.48 | 2.48 | 2.21 | 5.39 | 2.67 | 2.02 | / | / | / |
| | min | 2.15 | 0.52 | 4.17 | 2.05 | 0.54 | 3.79 | 2.15 | 0.66 | 3.28 | 3.18 | 1.06 | 3.00 | 3.53 | 1.30 | 2.72 | 3.70 | 1.49 | 2.49 | 3.60 | 1.61 | 2.24 | 3.71 | 1.81 | 2.06 | / | / | / |
| 0 | max | 8.08 | 1.78 | 4.53 | 8.38 | 2.06 | 4.07 | 8.41 | 2.34 | 3.59 | 8.28 | 2.61 | 3.18 | 7.93 | 2.81 | 2.83 | 7.95 | 3.01 | 2.64 | 7.00 | 3.02 | 2.32 | 6.86 | 3.22 | 2.13 | / | / | / |
| | norm | 7.45 | 1.60 | 4.67 | 7.62 | 1.83 | 4.18 | 7.59 | 2.06 | 3.69 | 7.63 | 2.37 | 3.22 | 7.02 | 2.40 | 2.93 | 7.24 | 2.69 | 2.69 | 6.24 | 2.66 | 2.35 | 6.04 | 2.84 | 2.13 | / | / | / |
| | min | 2.17 | 0.45 | 4.78 | 2.39 | 0.55 | 4.34 | 2.35 | 0.61 | 3.82 | 3.57 | 1.07 | 3.33 | 3.50 | 1.16 | 3.01 | 4.04 | 1.47 | 2.75 | 3.75 | 1.56 | 2.41 | 4.06 | 1.87 | 2.18 | / | / | / |
| 5 | max | 8.68 | 1.53 | 5.66 | 8.77 | 1.85 | 4.75 | 8.94 | 1.98 | 4.52 | 8.66 | 2.36 | 3.67 | 8.52 | 2.62 | 3.25 | 8.13 | 2.82 | 2.89 | 7.45 | 2.77 | 2.69 | 7.12 | 2.95 | 2.41 | 3.77 | 3.34 | 1.13 |
| | norm | 7.93 | 1.35 | 5.88 | 7.92 | 1.61 | 4.91 | 8.00 | 1.71 | 4.68 | 7.92 | 2.10 | 3.77 | 7.47 | 2.19 | 3.41 | 7.35 | 2.48 | 2.97 | 6.59 | 2.39 | 2.75 | 6.22 | 2.55 | 2.44 | 3.22 | 2.77 | 1.16 |
| | min | 2.84 | 0.46 | 6.13 | 3.04 | 0.59 | 5.14 | 3.03 | 0.62 | 4.89 | 3.99 | 1.02 | 3.92 | 4.01 | 1.14 | 3.51 | 4.38 | 1.44 | 3.05 | 4.22 | 1.48 | 2.84 | 4.43 | 1.76 | 2.51 | 2.40 | 2.03 | 1.18 |
| 7 | max | 9.32 | 1.49 | 6.24 | 9.02 | 1.76 | 5.11 | 9.02 | 1.80 | 5.01 | 8.73 | 2.18 | 4.00 | 8.80 | 2.40 | 3.67 | 8.26 | 2.71 | 3.04 | 7.69 | 2.53 | 3.05 | 7.25 | 2.71 | 2.67 | 3.96 | 3.06 | 1.29 |
| | norm | 8.43 | 1.30 | 6.49 | 8.05 | 1.50 | 5.37 | 8.01 | 1.60 | 5.01 | 7.89 | 1.90 | 4.16 | 8.04 | 2.12 | 3.79 | 7.38 | 2.34 | 3.16 | 7.40 | 2.38 | 3.10 | 6.26 | 2.30 | 2.73 | 3.34 | 2.51 | 1.33 |
| | min | 3.33 | 0.49 | 6.74 | 3.39 | 0.61 | 5.54 | 3.24 | 0.61 | 5.32 | 4.11 | 0.95 | 4.34 | 4.75 | 1.19 | 3.98 | 5.13 | 1.57 | 3.26 | 4.88 | 1.50 | 3.24 | 4.76 | 1.69 | 2.81 | 2.61 | 1.93 | 1.35 |
| 10 | max | 9.95 | 1.39 | 7.15 | 9.09 | 1.62 | 5.61 | 8.63 | 1.65 | 5.23 | 8.58 | 2.08 | 4.12 | 8.57 | 2.28 | 3.75 | 8.11 | 2.47 | 3.29 | 8.09 | 2.50 | 3.23 | 7.51 | 2.77 | 2.71 | 5.42 | 2.70 | 2.01 |
| | norm | 8.87 | 1.17 | 7.55 | 7.96 | 1.36 | 5.87 | 7.61 | 1.41 | 5.40 | 7.66 | 1.79 | 4.27 | 7.75 | 2.04 | 3.80 | 7.50 | 2.22 | 3.37 | 7.04 | 2.13 | 3.30 | 6.90 | 2.50 | 2.76 | 4.77 | 2.32 | 2.06 |
| | min | 3.02 | 0.38 | 7.92 | 2.67 | 0.43 | 6.22 | 2.73 | 0.49 | 5.58 | 3.87 | 0.85 | 4.52 | 4.64 | 1.17 | 3.95 | 4.89 | 1.40 | 3.50 | 5.10 | 1.48 | 3.43 | 5.03 | 1.75 | 2.86 | 3.69 | 1.75 | 2.10 |
| 15 | max | 9.66 | 1.15 | 8.38 | 9.20 | 1.36 | 6.78 | 8.77 | 1.54 | 5.70 | 8.94 | 1.82 | 4.91 | 8.73 | 2.07 | 4.22 | 8.24 | 2.27 | 3.62 | 8.20 | 2.36 | 3.47 | 7.69 | 2.54 | 3.03 | 5.54 | 2.44 | 2.27 |
| | norm | 8.78 | 0.96 | 9.17 | 8.15 | 1.11 | 7.33 | 7.83 | 1.30 | 6.04 | 8.09 | 1.55 | 5.23 | 7.99 | 1.83 | 4.37 | 7.69 | 2.02 | 3.81 | 7.23 | 2.01 | 3.60 | 7.14 | 2.28 | 3.12 | 5.03 | 2.15 | 2.34 |
| | min | 3.78 | 0.39 | 9.66 | 3.62 | 0.47 | 7.71 | 3.43 | 0.54 | 6.34 | 4.14 | 0.75 | 5.51 | 4.84 | 1.06 | 4.56 | 5.09 | 1.28 | 3.99 | 5.91 | 1.57 | 3.77 | 5.61 | 1.77 | 3.16 | 3.71 | 1.55 | 2.39 |
| 20 | max | 9.46 | 0.98 | 9.66 | 9.32 | 1.16 | 8.01 | 9.00 | 1.35 | 6.69 | 9.32 | 1.64 | 5.69 | 8.90 | 1.85 | 4.82 | 8.36 | 2.06 | 4.06 | 8.31 | 2.14 | 3.88 | 7.87 | 2.32 | 3.40 | / | / | / |
| | norm | 8.64 | 0.81 | 10.62 | 8.29 | 0.96 | 8.65 | 8.08 | 1.13 | 7.13 | 8.46 | 1.39 | 6.08 | 8.19 | 1.62 | 5.05 | 7.85 | 1.83 | 4.30 | 7.37 | 1.82 | 4.05 | 7.35 | 2.15 | 3.41 | / | / | / |
| | min | 4.25 | 0.38 | 11.16 | 4.57 | 0.50 | 9.14 | 4.77 | 0.63 | 7.54 | 5.87 | 0.91 | 6.47 | 5.52 | 1.04 | 5.30 | 5.44 | 1.20 | 4.52 | 5.57 | 1.31 | 4.24 | 5.27 | 1.47 | 3.58 | / | / | / |
| 25 | max | 9.23 | 0.93 | 9.96 | 8.82 | 1.05 | 8.40 | 8.44 | 1.17 | 7.20 | 9.02 | 1.48 | 6.08 | 8.83 | 1.58 | 5.58 | 8.44 | 1.91 | 4.42 | 7.98 | 1.92 | 4.16 | 7.47 | 2.05 | 3.64 | / | / | / |
| | norm | 8.22 | 0.75 | 10.94 | 8.01 | 0.88 | 9.13 | 7.85 | 1.00 | 7.85 | 8.35 | 1.27 | 6.59 | 8.27 | 1.41 | 5.88 | 8.07 | 1.71 | 4.71 | 7.21 | 1.66 | 4.35 | 7.11 | 1.93 | 3.69 | / | / | / |

| | | | | | | | | | | | | | | | | | | | | | | | | | | | | |
|---|---|---|---|---|---|---|---|---|---|---|---|---|---|---|---|---|---|---|---|---|---|---|---|---|---|---|---|---|
| | min | 5.08 | 0.43 | 11.73 | 5.20 | 0.54 | 9.63 | 5.40 | 0.65 | 8.27 | 6.59 | 0.95 | 6.95 | 6.35 | 1.03 | 6.16 | 6.33 | 1.28 | 4.97 | 5.73 | 1.25 | 4.57 | 5.46 | 1.41 | 3.88 | / | / | / |
| 30 | max | 9.00 | 0.85 | 10.52 | 8.32 | 0.95 | 8.77 | 8.01 | 1.07 | 7.48 | 8.73 | 1.33 | 6.57 | 8.75 | 1.46 | 6.00 | 8.51 | 1.77 | 4.79 | 7.73 | 1.75 | 4.42 | 7.08 | 1.82 | 3.90 | / | / | / |
| | norm | 8.07 | 0.69 | 11.69 | 7.60 | 0.79 | 9.67 | 7.37 | 0.92 | 8.03 | 8.12 | 1.14 | 7.11 | 8.25 | 1.30 | 6.37 | 8.18 | 1.59 | 5.14 | 7.03 | 1.50 | 4.67 | 6.78 | 1.70 | 3.98 | / | / | / |
| | min | 5.17 | 0.42 | 12.25 | 5.12 | 0.50 | 10.24 | 5.24 | 0.61 | 8.57 | 5.98 | 0.79 | 7.53 | 6.43 | 0.96 | 6.71 | 6.60 | 1.22 | 5.39 | 5.75 | 1.17 | 4.91 | 5.35 | 1.28 | 4.19 | / | / | / |
| 35 | max | 9.36 | 0.87 | 10.82 | 8.65 | 0.95 | 9.12 | 8.33 | 1.08 | 7.70 | 9.07 | 1.35 | 6.72 | 9.10 | 1.49 | 6.11 | 8.85 | 1.76 | 5.01 | 8.05 | 1.82 | 4.43 | / | / | / | / | / | / |
| | norm | 8.46 | 0.70 | 12.08 | 7.97 | 0.80 | 10.01 | 7.73 | 0.92 | 8.42 | 8.52 | 1.15 | 7.38 | 8.65 | 1.33 | 6.53 | 8.58 | 1.58 | 5.42 | 7.38 | 1.50 | 4.90 | / | / | / | / | / | / |
| | min | 6.27 | 0.49 | 12.69 | 5.88 | 0.55 | 10.68 | 5.47 | 0.61 | 8.94 | 6.26 | 0.79 | 7.89 | 6.73 | 0.98 | 6.88 | 7.08 | 1.24 | 5.69 | 6.27 | 1.21 | 5.17 | / | / | / | / | / | / |
| 40 | max | 9.80 | 0.90 | 10.94 | 9.08 | 0.95 | 9.58 | 8.74 | 1.07 | 8.16 | 9.52 | 1.36 | 7.01 | 9.56 | 1.54 | 6.20 | 9.29 | 1.77 | 5.23 | / | / | / | / | / | / | / | / | / |
| | norm | 9.02 | 0.72 | 12.50 | 8.22 | 0.77 | 10.75 | 7.88 | 0.89 | 8.88 | 8.69 | 1.12 | 7.74 | 8.83 | 1.33 | 6.66 | 8.76 | 1.53 | 5.73 | / | / | / | / | / | / | / | / | / |
| | min | 6.68 | 0.50 | 13.24 | 6.09 | 0.54 | 11.26 | 6.21 | 0.65 | 9.52 | 6.86 | 0.83 | 8.23 | 7.26 | 1.03 | 7.05 | 7.53 | 1.25 | 6.00 | / | / | / | / | / | / | / | / | / |
| 43 | max | 10.09 | 0.87 | 11.67 | 9.36 | 0.87 | 10.79 | 9.01 | 1.03 | 8.74 | 9.81 | 1.31 | 7.50 | 9.80 | 1.50 | 6.54 | 9.57 | 1.64 | 5.83 | / | / | / | / | / | / | / | / | / |
| | norm | 9.37 | 0.71 | 13.18 | 8.55 | 0.70 | 12.14 | 8.19 | 0.85 | 9.68 | 9.03 | 1.08 | 8.35 | 9.17 | 1.29 | 7.14 | 9.09 | 1.42 | 6.41 | / | / | / | / | / | / | / | / | / |
| | min | 6.99 | 0.49 | 14.13 | 6.36 | 0.50 | 12.73 | 6.49 | 0.63 | 10.26 | 7.17 | 0.80 | 8.92 | 7.67 | 1.03 | 7.45 | 7.95 | 1.18 | 6.72 | / | / | / | / | / | / | / | / | / |

Abbreviazioni:

*LWT: Temperatura dell'acqua in uscita (°C )*

*DB: Temperatura a bulbo secco perla temperatura dell'aria esterna (°C )*

*HC: Capacità di riscaldamento totale (kW)*

*PI: Potenza in ingresso (kW)*

*Tabella 2-5.2: Capacità di riscaldamento per THMLd-10D/HBp-A*

| DB | LWT | | | | | | | | | | | | | | | | | | | | | | | | | | | | |
|---|---|---|---|---|---|---|---|---|---|---|---|---|---|---|---|---|---|---|---|---|---|---|---|---|---|---|---|---|---|
| | | 25 | | | 30 | | | 35 | | | 40 | | | 45 | | | 50 | | | 55 | | | 60 | | | 65 | | |
| | livello HC | HC | PI | COP | HC | PI | COP | HC | PI | COP | HC | PI | COP | HC | PI | COP | HC | PI | COP | HC | PI | COP | HC | PI | COP | HC | PI | COP |
| -25 | max | 4.49 | 2.06 | 2.18 | 4.04 | 2.12 | 1.90 | 3.70 | 2.30 | 1.61 | 3.40 | 2.26 | 1.50 | 2.81 | 2.24 | 1.26 | / | / | / | / | / | / | / | / | / | / | / | / |
| | norm | 4.16 | 1.87 | 2.22 | 3.72 | 1.89 | 1.96 | 3.38 | 2.07 | 1.63 | 3.15 | 2.09 | 1.50 | 2.64 | 2.12 | 1.25 | / | / | / | / | / | / | / | / | / | / | / | / |
| | min | 2.70 | 1.19 | 2.26 | 2.51 | 1.26 | 1.98 | 2.56 | 1.55 | 1.66 | 2.41 | 1.58 | 1.53 | 1.78 | 1.42 | 1.25 | / | / | / | / | / | / | / | / | / | / | / | / |
| -20 | max | 5.74 | 2.12 | 2.70 | 5.14 | 2.24 | 2.29 | 4.88 | 2.36 | 2.06 | 4.39 | 2.58 | 1.70 | 3.70 | 2.37 | 1.56 | 3.17 | 2.37 | 1.34 | 2.71 | 2.22 | 1.22 | / | / | / | / | / | / |
| | norm | 5.25 | 1.87 | 2.80 | 4.68 | 1.98 | 2.36 | 4.41 | 2.07 | 2.13 | 4.02 | 2.31 | 1.74 | 3.43 | 2.18 | 1.57 | 2.95 | 2.19 | 1.35 | 2.61 | 2.13 | 1.22 | / | / | / | / | / | / |
| | min | 3.22 | 1.12 | 2.87 | 2.77 | 1.15 | 2.41 | 2.83 | 1.30 | 2.17 | 2.81 | 1.59 | 1.77 | 2.29 | 1.45 | 1.58 | 2.19 | 1.61 | 1.37 | 1.98 | 1.60 | 1.24 | / | / | / | / | / | / |
| -15 | max | 6.97 | 2.15 | 3.24 | 6.51 | 2.34 | 2.78 | 6.30 | 2.65 | 2.38 | 5.65 | 2.60 | 2.18 | 5.29 | 2.73 | 1.94 | 4.66 | 2.85 | 1.64 | 5.12 | 3.10 | 1.65 | 3.99 | 2.99 | 1.33 | / | / | / |
| | norm | 6.31 | 1.86 | 3.38 | 5.86 | 2.03 | 2.88 | 5.62 | 2.26 | 2.48 | 5.12 | 2.29 | 2.23 | 4.69 | 2.39 | 1.97 | 4.16 | 2.48 | 1.67 | 4.72 | 2.82 | 1.68 | 3.71 | 2.78 | 1.34 | / | / | / |
| | min | 3.25 | 0.94 | 3.46 | 3.16 | 1.07 | 2.95 | 3.00 | 1.18 | 2.54 | 3.17 | 1.38 | 2.29 | 3.38 | 1.69 | 2.00 | 3.22 | 1.90 | 1.70 | 3.48 | 2.04 | 1.70 | 2.83 | 2.09 | 1.35 | / | / | / |
| -10 | max | 8.04 | 2.33 | 3.44 | 7.81 | 2.54 | 3.08 | 7.73 | 2.68 | 2.89 | 7.37 | 2.89 | 2.55 | 7.01 | 3.07 | 2.28 | 6.68 | 3.34 | 2.00 | 6.57 | 3.65 | 1.80 | 5.11 | 3.18 | 1.61 | / | / | / |
| | norm | 7.19 | 1.97 | 3.64 | 6.96 | 2.15 | 3.23 | 6.81 | 2.28 | 2.98 | 6.60 | 2.53 | 2.61 | 6.36 | 2.75 | 2.31 | 6.09 | 2.99 | 2.04 | 5.99 | 3.29 | 1.82 | 4.71 | 2.94 | 1.60 | / | / | / |
| | min | 3.19 | 0.85 | 3.74 | 3.05 | 0.92 | 3.31 | 3.05 | 0.99 | 3.08 | 3.83 | 1.42 | 2.69 | 4.25 | 1.80 | 2.36 | 4.54 | 2.19 | 2.07 | 4.55 | 2.45 | 1.86 | 3.68 | 2.24 | 1.64 | / | / | / |
| -7 | max | 8.37 | 2.29 | 3.65 | 8.14 | 2.49 | 3.26 | 8.14 | 2.64 | 3.09 | 7.68 | 2.84 | 2.71 | 7.30 | 3.02 | 2.42 | 6.96 | 3.29 | 2.11 | 6.94 | 3.60 | 1.93 | 5.33 | 3.13 | 1.70 | / | / | / |
| | norm | 7.95 | 2.11 | 3.76 | 7.85 | 2.33 | 3.36 | 8.09 | 2.65 | 3.06 | 7.17 | 2.57 | 2.79 | 6.98 | 2.85 | 2.45 | 6.65 | 3.07 | 2.17 | 6.75 | 3.50 | 1.93 | 4.88 | 2.82 | 1.73 | / | / | / |
| | min | 2.01 | 0.51 | 3.93 | 1.87 | 0.54 | 3.46 | 2.01 | 0.62 | 3.26 | 3.40 | 1.15 | 2.95 | 3.58 | 1.40 | 2.57 | 3.63 | 1.64 | 2.22 | 3.93 | 1.97 | 2.00 | 3.42 | 1.93 | 1.77 | / | / | / |
| -5 | max | 8.45 | 2.14 | 3.94 | 8.51 | 2.47 | 3.44 | 8.62 | 2.67 | 3.23 | 8.16 | 2.97 | 2.75 | 7.77 | 3.06 | 2.54 | 7.64 | 3.30 | 2.31 | 7.13 | 3.25 | 2.19 | 5.82 | 3.13 | 1.86 | / | / | / |
| | norm | 7.61 | 1.82 | 4.17 | 7.58 | 2.12 | 3.57 | 7.28 | 2.19 | 3.33 | 7.19 | 2.47 | 2.91 | 6.77 | 2.57 | 2.63 | 6.54 | 2.75 | 2.38 | 6.15 | 2.72 | 2.26 | 5.19 | 2.74 | 1.90 | / | / | / |
| | min | 2.29 | 0.53 | 4.32 | 2.23 | 0.60 | 3.70 | 2.36 | 0.69 | 3.40 | 3.54 | 1.18 | 3.00 | 3.75 | 1.40 | 2.69 | 3.92 | 1.62 | 2.43 | 4.03 | 1.75 | 2.30 | 3.57 | 1.85 | 1.93 | / | / | / |
| 0 | max | 8.67 | 1.83 | 4.73 | 8.99 | 2.31 | 3.88 | 9.08 | 2.52 | 3.60 | 8.93 | 2.96 | 3.02 | 8.45 | 3.07 | 2.75 | 8.38 | 3.30 | 2.54 | 7.75 | 3.24 | 2.39 | 6.64 | 3.33 | 1.99 | / | / | / |
| | norm | 8.00 | 1.64 | 4.87 | 8.18 | 2.05 | 3.98 | 8.20 | 2.22 | 3.70 | 8.23 | 2.69 | 3.06 | 7.48 | 2.62 | 2.85 | 7.63 | 2.95 | 2.59 | 6.91 | 2.81 | 2.46 | 5.85 | 2.94 | 1.99 | / | / | / |
| | min | 2.32 | 0.46 | 5.04 | 2.57 | 0.62 | 4.14 | 2.54 | 0.66 | 3.82 | 3.85 | 1.21 | 3.18 | 3.72 | 1.28 | 2.92 | 4.26 | 1.61 | 2.65 | 4.15 | 1.65 | 2.52 | 3.93 | 1.93 | 2.04 | / | / | / |
| 5 | max | 9.54 | 1.73 | 5.50 | 9.57 | 2.07 | 4.61 | 9.60 | 2.23 | 4.31 | 9.75 | 2.67 | 3.66 | 9.30 | 2.85 | 3.26 | 8.98 | 3.17 | 2.83 | 8.60 | 3.20 | 2.68 | 7.46 | 3.23 | 2.31 | 4.34 | 3.33 | 1.30 |
| | norm | 8.73 | 1.53 | 5.69 | 8.64 | 1.81 | 4.76 | 8.62 | 1.92 | 4.49 | 8.91 | 2.37 | 3.75 | 8.15 | 2.39 | 3.42 | 8.10 | 2.79 | 2.91 | 7.59 | 2.76 | 2.75 | 6.52 | 2.80 | 2.33 | 3.71 | 2.78 | 1.33 |
| | min | 3.13 | 0.53 | 5.89 | 3.31 | 0.67 | 4.93 | 3.26 | 0.70 | 4.64 | 4.49 | 1.15 | 3.90 | 4.38 | 1.25 | 3.51 | 4.83 | 1.62 | 2.99 | 4.87 | 1.72 | 2.82 | 4.65 | 1.94 | 2.40 | 2.76 | 2.04 | 1.35 |
| 7 | max | 10.08 | 1.77 | 5.68 | 9.89 | 1.97 | 5.01 | 9.79 | 2.07 | 4.73 | 10.13 | 2.53 | 4.01 | 9.79 | 2.70 | 3.62 | 9.34 | 3.08 | 3.03 | 9.20 | 3.14 | 2.94 | 7.82 | 2.99 | 2.62 | 4.66 | 3.14 | 1.48 |
| | norm | 9.79 | 1.69 | 5.78 | 9.58 | 1.85 | 5.17 | 9.50 | 1.98 | 4.80 | 9.75 | 2.39 | 4.07 | 9.50 | 2.60 | 3.65 | 9.10 | 2.95 | 3.09 | 9.00 | 3.00 | 3.00 | 7.32 | 2.75 | 2.66 | 4.12 | 2.69 | 1.53 |
| | min | 3.61 | 0.58 | 6.21 | 3.71 | 0.68 | 5.44 | 3.62 | 0.70 | 5.15 | 4.75 | 1.10 | 4.31 | 5.27 | 1.35 | 3.92 | 5.80 | 1.78 | 3.26 | 5.84 | 1.86 | 3.14 | 5.14 | 1.87 | 2.75 | 3.06 | 1.98 | 1.55 |
| 10 | max | 10.75 | 1.59 | 6.75 | 9.98 | 1.85 | 5.39 | 9.50 | 1.94 | 4.90 | 9.59 | 2.40 | 3.99 | 9.38 | 2.66 | 3.52 | 9.11 | 2.94 | 3.10 | 9.06 | 3.05 | 2.97 | 7.86 | 3.07 | 2.56 | 6.18 | 3.08 | 2.01 |
| | norm | 9.70 | 1.34 | 7.22 | 8.76 | 1.54 | 5.67 | 8.41 | 1.66 | 5.06 | 8.57 | 2.06 | 4.16 | 8.49 | 2.38 | 3.57 | 8.42 | 2.65 | 3.18 | 7.90 | 2.60 | 3.04 | 7.22 | 2.77 | 2.61 | 5.43 | 2.65 | 2.05 |
| | min | 3.29 | 0.44 | 7.47 | 2.93 | 0.49 | 5.96 | 3.01 | 0.56 | 5.34 | 4.31 | 0.99 | 4.36 | 5.07 | 1.37 | 3.71 | 5.49 | 1.66 | 3.32 | 5.72 | 1.81 | 3.15 | 5.26 | 1.94 | 2.71 | 4.20 | 2.00 | 2.10 |
| 15 | max | 10.94 | 1.41 | 7.75 | 10.18 | 1.64 | 6.19 | 9.69 | 1.71 | 5.66 | 9.75 | 2.13 | 4.57 | 9.60 | 2.37 | 4.06 | 9.29 | 2.61 | 3.57 | 9.24 | 2.70 | 3.42 | 8.01 | 2.73 | 2.94 | 6.30 | 2.74 | 2.30 |
| | norm | 9.89 | 1.18 | 8.36 | 9.02 | 1.35 | 6.67 | 8.67 | 1.46 | 5.96 | 8.84 | 1.81 | 4.89 | 8.76 | 2.08 | 4.21 | 8.68 | 2.31 | 3.75 | 8.14 | 2.29 | 3.55 | 7.45 | 2.44 | 3.05 | 5.73 | 2.41 | 2.37 |
| | min | 4.30 | 0.48 | 8.94 | 4.00 | 0.57 | 7.01 | 3.80 | 0.60 | 6.29 | 4.53 | 0.88 | 5.15 | 5.30 | 1.20 | 4.43 | 5.73 | 1.45 | 3.94 | 6.66 | 1.79 | 3.71 | 5.85 | 1.90 | 3.08 | 4.22 | 1.73 | 2.45 |
| 20 | max | 10.37 | 1.19 | 8.70 | 10.37 | 1.35 | 7.66 | 10.17 | 1.57 | 6.46 | 10.33 | 1.91 | 5.41 | 9.79 | 2.10 | 4.66 | 9.50 | 2.40 | 3.95 | 9.33 | 2.49 | 3.75 | 8.46 | 2.59 | 3.27 | / | / | / |
| | norm | 9.48 | 0.99 | 9.56 | 9.20 | 1.11 | 8.27 | 9.10 | 1.33 | 6.86 | 9.36 | 1.62 | 5.79 | 8.99 | 1.84 | 4.88 | 8.94 | 2.13 | 4.19 | 8.27 | 2.12 | 3.91 | 7.89 | 2.40 | 3.28 | / | / | / |
| | min | 4.67 | 0.46 | 10.12 | 5.06 | 0.58 | 8.71 | 5.38 | 0.74 | 7.24 | 6.49 | 1.06 | 6.12 | 6.06 | 1.18 | 5.14 | 6.18 | 1.40 | 4.41 | 6.25 | 1.52 | 4.11 | 5.66 | 1.64 | 3.46 | / | / | / |
| 25 | max | 9.54 | 1.04 | 9.16 | 9.50 | 1.17 | 8.11 | 9.33 | 1.37 | 6.83 | 9.48 | 1.66 | 5.72 | 8.99 | 1.82 | 4.93 | 8.76 | 2.09 | 4.19 | 8.58 | 2.16 | 3.98 | 7.77 | 2.24 | 3.47 | / | / | / |
| | norm | 8.51 | 0.83 | 10.23 | 8.62 | 0.98 | 8.78 | 8.54 | 1.17 | 7.31 | 8.78 | 1.41 | 6.21 | 8.43 | 1.61 | 5.22 | 8.38 | 1.87 | 4.48 | 7.76 | 1.85 | 4.19 | 7.40 | 2.11 | 3.51 | / | / | / |
| | min | 5.25 | 0.49 | 10.70 | 5.61 | 0.60 | 9.33 | 5.88 | 0.76 | 7.71 | 6.92 | 1.05 | 6.59 | 6.47 | 1.18 | 5.49 | 6.57 | 1.39 | 4.72 | 6.16 | 1.40 | 4.40 | 5.67 | 1.54 | 3.69 | / | / | / |
| 30 | max | 9.38 | 0.96 | 9.75 | 8.71 | 1.10 | 7.90 | 8.46 | 1.11 | 7.63 | 8.54 | 1.33 | 6.41 | 9.42 | 1.59 | 5.91 | 8.84 | 1.90 | 4.66 | 8.56 | 1.84 | 4.65 | 7.12 | 1.98 | 3.59 | / | / | / |
| | norm | 8.41 | 0.77 | 10.90 | 7.95 | 0.86 | 9.22 | 7.78 | 0.95 | 8.19 | 7.95 | 1.14 | 6.97 | 8.88 | 1.42 | 6.27 | 8.51 | 1.70 | 5.02 | 7.77 | 1.58 | 4.93 | 6.81 | 1.86 | 3.67 | / | / | / |

| | | | | | | | | | | | | | | | | | | | | | | | | | | | | |
|---|---|---|---|---|---|---|---|---|---|---|---|---|---|---|---|---|---|---|---|---|---|---|---|---|---|---|---|---|
| | min | 5.40 | 0.47 | 11.46 | 5.36 | 0.55 | 9.72 | 5.54 | 0.63 | 8.74 | 5.85 | 0.79 | 7.42 | 6.93 | 1.05 | 6.60 | 6.86 | 1.30 | 5.26 | 6.35 | 1.23 | 5.15 | 5.37 | 1.39 | 3.85 | / | / | / |
| 35 | max | 9.79 | 0.95 | 10.29 | 9.06 | 1.03 | 8.78 | 8.79 | 1.10 | 8.00 | 8.89 | 1.33 | 6.67 | 9.79 | 1.59 | 6.14 | 9.21 | 1.89 | 4.87 | 8.92 | 1.86 | 4.79 | / | / | / | / | / | / |
| | norm | 8.82 | 0.76 | 11.59 | 8.34 | 0.86 | 9.68 | 8.16 | 0.94 | 8.68 | 8.35 | 1.14 | 7.31 | 9.32 | 1.42 | 6.58 | 8.92 | 1.70 | 5.26 | 8.17 | 1.60 | 5.12 | / | / | / | / | / | / |
| | min | 6.54 | 0.53 | 12.31 | 6.16 | 0.60 | 10.25 | 5.77 | 0.63 | 9.10 | 6.13 | 0.79 | 7.78 | 7.26 | 1.05 | 6.92 | 7.36 | 1.33 | 5.52 | 6.95 | 1.29 | 5.37 | / | / | / | / | / | / |
| 40 | max | 10.27 | 0.93 | 11.02 | 9.51 | 1.01 | 9.40 | 9.22 | 1.14 | 8.10 | 9.33 | 1.33 | 7.00 | 10.26 | 1.58 | 6.48 | 9.69 | 1.86 | 5.21 | / | / | / | / | / | / | / | / | / |
| | norm | 9.40 | 0.75 | 12.51 | 8.61 | 0.82 | 10.48 | 8.31 | 0.94 | 8.84 | 8.51 | 1.10 | 7.73 | 9.50 | 1.36 | 7.00 | 9.11 | 1.61 | 5.67 | / | / | / | / | / | / | / | / | / |
| | min | 6.97 | 0.53 | 13.12 | 6.37 | 0.58 | 10.97 | 6.56 | 0.69 | 9.46 | 6.72 | 0.82 | 8.21 | 7.83 | 1.06 | 7.39 | 7.83 | 1.31 | 5.96 | / | / | / | / | / | / | / | / | / |
| 43 | max | 10.56 | 0.91 | 11.58 | 9.79 | 0.96 | 10.18 | 9.50 | 1.07 | 8.89 | 9.61 | 1.24 | 7.74 | 10.64 | 1.46 | 7.31 | 9.98 | 1.70 | 5.88 | / | / | / | / | / | / | / | / | / |
| | norm | 9.79 | 0.74 | 13.21 | 8.95 | 0.79 | 11.30 | 8.65 | 0.88 | 9.81 | 8.84 | 1.03 | 8.58 | 9.88 | 1.26 | 7.86 | 9.46 | 1.46 | 6.46 | / | / | / | / | / | / | / | / | / |
| | min | 7.29 | 0.52 | 13.98 | 6.66 | 0.55 | 12.09 | 6.84 | 0.66 | 10.31 | 7.02 | 0.77 | 9.14 | 8.27 | 1.00 | 8.28 | 8.27 | 1.22 | 6.76 | / | / | / | / | / | / | / | / | / |

Abbreviazioni:

*LWT: Temperatura dell'acqua in uscita (°C )*

*DB: Temperatura a bulbo secco perla temperatura dell'aria esterna (°C )*

*HC: Capacità di riscaldamento totale (kW)*

*PI: Potenza in ingresso (kW)*

*Tabella 2-5.3: Capacitò di riscaldamento per THMLd-12D(S)/HBp-A*

Massimo

| DB | LWT | | | | | | | | | | | | | | | | | | | | | | | | | | |
|---|---|---|---|---|---|---|---|---|---|---|---|---|---|---|---|---|---|---|---|---|---|---|---|---|---|---|---|
| | 25 | | | 30 | | | 35 | | | 40 | | | 45 | | | 50 | | | 55 | | | 60 | | | 65 | | |
| | HC | PI | COP | HC | PI | COP | HC | PI | COP | HC | PI | COP | HC | PI | COP | HC | PI | COP | HC | PI | COP | HC | PI | COP | HC | PI | COP |
| -25 | 6.00 | 2.78 | 2.16 | 6.23 | 2.91 | 2.14 | 5.00 | 2.96 | 1.69 | 4.51 | 3.12 | 1.44 | 4.21 | 3.29 | 1.28 | / | / | / | / | / | / | / | / | / | / | / | / |
| -20 | 7.61 | 3.00 | 2.54 | 7.65 | 3.08 | 2.48 | 7.17 | 3.34 | 2.15 | 6.35 | 3.41 | 1.86 | 6.02 | 3.52 | 1.71 | 5.33 | 3.55 | 1.50 | 5.05 | 3.63 | 1.39 | / | / | / | / | / | / |
| -15 | 8.86 | 3.12 | 2.84 | 8.82 | 3.34 | 2.64 | 8.82 | 3.62 | 2.44 | 7.89 | 3.62 | 2.18 | 7.35 | 3.95 | 1.86 | 6.68 | 3.97 | 1.68 | 6.30 | 4.31 | 1.46 | 5.84 | 4.69 | 1.25 | / | / | / |
| -10 | 10.95 | 3.47 | 3.15 | 10.05 | 3.68 | 2.73 | 9.95 | 3.95 | 2.52 | 9.64 | 4.34 | 2.22 | 9.27 | 4.54 | 2.04 | 8.92 | 4.62 | 1.93 | 8.56 | 4.79 | 1.79 | 6.67 | 5.13 | 1.30 | / | / | / |
| -7 | 12.24 | 3.52 | 3.48 | 10.85 | 3.62 | 3.00 | 10.95 | 3.89 | 2.81 | 10.35 | 4.27 | 2.42 | 10.35 | 4.50 | 2.30 | 10.55 | 4.74 | 2.23 | 10.55 | 5.25 | 2.01 | 8.01 | 5.06 | 1.58 | / | / | / |
| -5 | 12.34 | 3.33 | 3.71 | 11.14 | 3.55 | 3.14 | 11.24 | 3.87 | 2.91 | 10.85 | 4.26 | 2.55 | 10.85 | 4.61 | 2.35 | 10.75 | 4.75 | 2.26 | 10.55 | 5.14 | 2.05 | 8.17 | 5.14 | 1.59 | / | / | / |
| 0 | 12.34 | 2.87 | 4.30 | 11.84 | 3.13 | 3.78 | 11.94 | 3.44 | 3.47 | 12.24 | 4.04 | 3.03 | 12.24 | 4.37 | 2.80 | 11.04 | 4.61 | 2.40 | 10.75 | 4.74 | 2.27 | 8.48 | 5.03 | 1.69 | / | / | / |
| 5 | 14.53 | 2.66 | 5.46 | 13.43 | 2.97 | 4.52 | 13.53 | 3.28 | 4.13 | 13.73 | 3.70 | 3.71 | 13.53 | 4.18 | 3.24 | 12.74 | 4.46 | 2.86 | 12.74 | 4.70 | 2.71 | 11.54 | 5.06 | 2.28 | 9.87 | 5.16 | 1.91 |
| 7 | 15.42 | 2.57 | 6.00 | 14.13 | 2.83 | 4.99 | 14.53 | 3.11 | 4.67 | 14.73 | 3.57 | 4.12 | 14.43 | 4.00 | 3.61 | 13.83 | 4.43 | 3.12 | 13.83 | 4.66 | 2.97 | 12.94 | 5.07 | 2.55 | 11.44 | 5.17 | 2.21 |
| 10 | 14.93 | 2.40 | 6.22 | 14.33 | 2.62 | 5.47 | 14.23 | 2.83 | 5.03 | 14.53 | 3.34 | 4.35 | 14.23 | 3.89 | 3.66 | 13.43 | 4.11 | 3.27 | 13.03 | 4.38 | 2.98 | 12.64 | 4.79 | 2.64 | 11.64 | 4.89 | 2.38 |
| 15 | 15.02 | 1.97 | 7.63 | 14.63 | 2.21 | 6.62 | 14.33 | 2.65 | 5.41 | 14.93 | 3.17 | 4.71 | 14.53 | 3.53 | 4.12 | 13.33 | 3.73 | 3.57 | 12.04 | 3.97 | 3.03 | 12.24 | 4.32 | 2.83 | 11.64 | 4.42 | 2.63 |
| 20 | 14.53 | 1.66 | 8.75 | 14.23 | 1.88 | 7.57 | 14.13 | 2.20 | 6.42 | 14.73 | 2.75 | 5.35 | 14.73 | 3.15 | 4.67 | 13.63 | 3.37 | 4.04 | 11.94 | 3.55 | 3.36 | 10.75 | 3.71 | 2.90 | / | / | / |
| 25 | 14.33 | 1.55 | 9.24 | 14.23 | 1.73 | 8.22 | 14.13 | 1.93 | 7.32 | 14.63 | 2.35 | 6.22 | 14.63 | 2.73 | 5.36 | 13.83 | 3.00 | 4.61 | 11.94 | 3.12 | 3.83 | 9.95 | 3.36 | 2.96 | / | / | / |
| 30 | 14.53 | 1.45 | 10.02 | 14.13 | 1.62 | 8.72 | 14.33 | 1.85 | 7.74 | 14.63 | 2.22 | 6.59 | 14.63 | 2.63 | 5.56 | 13.93 | 2.82 | 4.94 | 12.54 | 2.94 | 4.26 | 10.25 | 3.4 | 3.01 | / | / | / |
| 35 | 15.12 | 1.39 | 10.88 | 14.83 | 1.60 | 9.27 | 14.63 | 1.80 | 8.13 | 15.02 | 2.17 | 6.92 | 14.53 | 2.50 | 5.81 | 14.13 | 2.72 | 5.19 | 12.84 | 2.79 | 4.60 | / | / | / | / | / | / |
| 40 | 15.62 | 1.41 | 11.08 | 15.52 | 1.59 | 9.76 | 15.32 | 1.79 | 8.56 | 15.92 | 2.17 | 7.34 | 15.22 | 2.44 | 6.24 | 14.43 | 2.69 | 5.36 | / | / | / | / | / | / | / | / | / |
| 43 | 16.12 | 1.35 | 11.94 | 15.92 | 1.50 | 10.61 | 15.82 | 1.73 | 9.14 | 16.42 | 2.11 | 7.78 | 15.92 | 2.35 | 6.77 | 14.73 | 2.57 | 5.73 | / | / | / | / | / | / | / | / | / |

Normale

| DB | LWT | | | | | | | | | | | | | | | | | | | | | | | | | | |
|---|---|---|---|---|---|---|---|---|---|---|---|---|---|---|---|---|---|---|---|---|---|---|---|---|---|---|---|
| | 25 | | | 30 | | | 35 | | | 40 | | | 45 | | | 50 | | | 55 | | | 60 | | | 65 | | |
| | HC | PI | COP | HC | PI | COP | HC | PI | COP | HC | PI | COP | HC | PI | COP | HC | PI | COP | HC | PI | COP | HC | PI | COP | HC | PI | COP |
| -25 | 5.13 | 2.24 | 2.29 | 5.29 | 2.32 | 2.28 | 4.22 | 2.37 | 1.78 | 3.86 | 2.57 | 1.50 | 3.64 | 2.82 | 1.29 | / | / | / | / | / | / | / | / | / | / | / | / |
| -20 | 6.70 | 2.45 | 2.73 | 6.70 | 2.49 | 2.69 | 6.22 | 2.72 | 2.29 | 5.59 | 2.85 | 1.96 | 5.28 | 3.01 | 1.76 | 4.70 | 3.03 | 1.55 | 4.61 | 3.30 | 1.40 | / | / | / | / | / | / |
| -15 | 7.39 | 2.41 | 3.07 | 7.31 | 2.55 | 2.87 | 7.24 | 2.78 | 2.61 | 6.60 | 2.86 | 2.31 | 6.01 | 3.13 | 1.92 | 5.48 | 3.14 | 1.75 | 5.27 | 3.58 | 1.47 | 4.94 | 4.01 | 1.23 | / | / | / |
| -10 | 9.01 | 2.69 | 3.35 | 8.22 | 2.83 | 2.90 | 8.10 | 3.06 | 2.65 | 7.96 | 3.45 | 2.31 | 7.76 | 3.70 | 2.10 | 7.50 | 3.77 | 1.99 | 7.20 | 3.91 | 1.84 | 5.67 | 4.30 | 1.32 | / | / | / |
| -7 | 11.04 | 3.11 | 3.55 | 10.25 | 3.26 | 3.14 | 9.95 | 3.33 | 2.99 | 10.05 | 4.06 | 2.48 | 10.15 | 4.25 | 2.39 | 10.25 | 4.48 | 2.29 | 9.75 | 4.78 | 2.04 | 7.19 | 4.42 | 1.63 | / | / | / |
| -5 | 10.25 | 2.55 | 4.02 | 9.17 | 2.72 | 3.37 | 9.00 | 2.89 | 3.12 | 8.83 | 3.19 | 2.77 | 8.74 | 3.48 | 2.51 | 8.43 | 3.59 | 2.35 | 8.32 | 3.91 | 2.13 | 6.71 | 4.10 | 1.64 | / | / | / |
| 0 | 9.88 | 2.09 | 4.73 | 9.30 | 2.29 | 4.06 | 9.14 | 2.46 | 3.72 | 9.46 | 2.88 | 3.29 | 9.38 | 3.14 | 2.99 | 8.09 | 3.22 | 2.51 | 7.89 | 3.38 | 2.33 | 6.67 | 3.83 | 1.74 | / | / | / |
| 5 | 11.74 | 1.95 | 6.02 | 10.75 | 2.18 | 4.93 | 10.55 | 2.35 | 4.49 | 10.75 | 2.65 | 4.06 | 10.55 | 3.01 | 3.50 | 9.70 | 3.22 | 3.01 | 9.78 | 3.42 | 2.86 | 9.16 | 3.86 | 2.37 | 8.15 | 4.05 | 2.01 |
| 7 | 12.84 | 1.96 | 6.55 | 11.84 | 2.19 | 5.41 | 12.04 | 2.44 | 4.93 | 12.34 | 2.75 | 4.49 | 12.24 | 3.32 | 3.69 | 12.14 | 3.75 | 3.24 | 11.84 | 3.90 | 3.04 | 10.75 | 4.06 | 2.65 | 9.59 | 4.10 | 2.34 |
| 10 | 11.74 | 1.72 | 6.83 | 11.14 | 1.87 | 5.96 | 10.85 | 1.97 | 5.51 | 11.24 | 2.34 | 4.80 | 10.85 | 2.74 | 3.96 | 10.05 | 2.93 | 3.43 | 9.81 | 3.16 | 3.10 | 9.87 | 3.62 | 2.73 | 9.43 | 3.80 | 2.48 |
| 15 | 11.94 | 1.41 | 8.47 | 11.54 | 1.58 | 7.31 | 10.95 | 1.84 | 5.95 | 11.54 | 2.21 | 5.22 | 11.14 | 2.48 | 4.49 | 10.05 | 2.66 | 3.78 | 9.07 | 2.85 | 3.18 | 9.61 | 3.26 | 2.95 | 9.52 | 3.39 | 2.81 |
| 20 | 11.44 | 1.16 | 9.86 | 11.04 | 1.32 | 8.37 | 10.75 | 1.50 | 7.16 | 11.34 | 1.89 | 6.00 | 11.14 | 2.17 | 5.14 | 10.05 | 2.35 | 4.28 | 8.96 | 2.50 | 3.58 | 8.33 | 2.74 | 3.04 | / | / | / |
| 25 | 11.34 | 1.09 | 10.41 | 11.14 | 1.22 | 9.13 | 10.75 | 1.33 | 8.08 | 11.34 | 1.46 | 7.77 | 11.14 | 1.89 | 5.90 | 10.35 | 2.11 | 4.90 | 8.99 | 2.21 | 4.07 | 7.81 | 2.50 | 3.12 | / | / | / |
| 30 | 11.64 | 1.04 | 11.19 | 11.14 | 1.16 | 9.61 | 10.95 | 1.29 | 8.48 | 11.44 | 1.41 | 8.12 | 11.34 | 1.93 | 5.88 | 10.45 | 2.01 | 5.20 | 9.57 | 2.14 | 4.47 | 8.13 | 2.58 | 3.15 | / | / | / |
| 35 | 12.34 | 1.02 | 12.10 | 11.94 | 1.17 | 10.21 | 11.44 | 1.32 | 8.67 | 11.94 | 1.60 | 7.46 | 11.44 | 1.86 | 6.15 | 10.95 | 1.96 | 5.58 | 9.95 | 2.06 | 4.83 | / | / | / | / | / | / |
| 40 | 13.03 | 1.06 | 12.30 | 12.84 | 1.19 | 10.79 | 12.44 | 1.33 | 9.35 | 12.94 | 1.63 | 7.94 | 12.34 | 1.84 | 6.71 | 11.44 | 1.98 | 5.78 | / | / | / | / | / | / | / | / | / |
| 43 | 13.63 | 1.02 | 13.36 | 13.33 | 1.14 | 11.70 | 12.94 | 1.30 | 9.95 | 13.63 | 1.60 | 8.52 | 13.03 | 1.80 | 7.24 | 11.84 | 1.91 | 6.20 | / | / | / | / | / | / | / | / | / |

Minimo

| DB | LWT | | | | | | | | | | | | | | | | | | | | | | | | | | |
|---|---|---|---|---|---|---|---|---|---|---|---|---|---|---|---|---|---|---|---|---|---|---|---|---|---|---|---|
| | 25 | | | 30 | | | 35 | | | 40 | | | 45 | | | 50 | | | 55 | | | 60 | | | 65 | | |
| | HC | PI | COP | HC | PI | COP | HC | PI | COP | HC | PI | COP | HC | PI | COP | HC | PI | COP | HC | PI | COP | HC | PI | COP | HC | PI | COP |
| -25 | 3.42 | 1.46 | 2.34 | 3.70 | 1.59 | 2.33 | 3.25 | 1.81 | 1.80 | 3.06 | 2.01 | 1.52 | 2.82 | 2.17 | 1.30 | / | / | / | / | / | / | / | / | / | / | / | / |
| -20 | 4.22 | 1.52 | 2.78 | 4.40 | 1.61 | 2.73 | 4.06 | 1.75 | 2.32 | 3.70 | 1.86 | 1.99 | 3.91 | 2.25 | 1.74 | 3.73 | 2.43 | 1.54 | 3.58 | 2.58 | 1.39 | / | / | / | / | / | / |
| -15 | 4.83 | 1.54 | 3.13 | 4.98 | 1.70 | 2.93 | 4.90 | 1.83 | 2.68 | 4.53 | 1.92 | 2.36 | 4.71 | 2.45 | 1.92 | 4.61 | 2.64 | 1.75 | 4.41 | 2.98 | 1.48 | 4.20 | 3.39 | 1.24 | / | / | / |
| -10 | 4.65 | 1.34 | 3.47 | 4.46 | 1.48 | 3.01 | 4.34 | 1.59 | 2.73 | 4.37 | 1.84 | 2.37 | 4.83 | 2.25 | 2.14 | 5.08 | 2.50 | 2.03 | 5.30 | 2.83 | 1.87 | 4.47 | 3.32 | 1.35 | / | / | / |
| -7 | 4.59 | 1.17 | 3.92 | 3.83 | 1.15 | 3.33 | 3.95 | 1.26 | 3.14 | 4.18 | 1.53 | 2.73 | 5.38 | 2.14 | 2.52 | 5.70 | 2.41 | 2.37 | 6.00 | 2.79 | 2.15 | 5.20 | 3.11 | 1.67 | / | / | / |
| -5 | 4.73 | 1.13 | 4.18 | 4.04 | 1.15 | 3.51 | 4.16 | 1.28 | 3.25 | 4.50 | 1.56 | 2.88 | 5.77 | 2.23 | 2.59 | 5.90 | 2.44 | 2.42 | 6.09 | 2.79 | 2.18 | 5.39 | 3.20 | 1.69 | / | / | / |
| 0 | 4.97 | 1.01 | 4.92 | 4.62 | 1.08 | 4.27 | 4.60 | 1.18 | 3.90 | 5.21 | 1.52 | 3.43 | 6.67 | 2.15 | 3.10 | 6.09 | 2.49 | 2.45 | 6.20 | 2.69 | 2.30 | 5.72 | 3.18 | 1.80 | / | / | / |
| 5 | 5.88 | 0.93 | 6.32 | 5.31 | 1.03 | 5.16 | 5.28 | 1.12 | 4.72 | 5.94 | 1.39 | 4.27 | 7.45 | 2.05 | 3.64 | 7.26 | 2.32 | 3.13 | 8.04 | 2.71 | 2.97 | 7.83 | 3.18 | 2.46 | 6.96 | 3.33 | 2.09 |
| 7 | 6.12 | 0.88 | 6.95 | 5.50 | 0.96 | 5.73 | 5.55 | 1.04 | 5.34 | 6.27 | 1.31 | 4.79 | 7.84 | 1.92 | 4.08 | 7.79 | 2.26 | 3.45 | 8.59 | 2.64 | 3.25 | 8.67 | 3.13 | 2.77 | 8.02 | 3.28 | 2.45 |
| 10 | 6.07 | 0.84 | 7.23 | 5.69 | 0.91 | 6.25 | 5.59 | 0.97 | 5.76 | 6.34 | 1.26 | 5.03 | 7.88 | 1.90 | 4.15 | 7.72 | 2.13 | 3.62 | 8.26 | 2.54 | 3.25 | 8.64 | 3.03 | 2.85 | 8.24 | 3.17 | 2.60 |
| 15 | 5.90 | 0.66 | 8.94 | 5.75 | 0.75 | 7.67 | 5.59 | 0.90 | 6.21 | 6.89 | 1.26 | 5.46 | 8.05 | 1.72 | 4.68 | 8.24 | 2.08 | 3.96 | 7.79 | 2.35 | 3.32 | 8.69 | 2.83 | 3.07 | 8.58 | 2.95 | 2.91 |
| 20 | 5.78 | 0.56 | 10.32 | 5.70 | 0.65 | 8.77 | 5.63 | 0.75 | 7.51 | 6.94 | 1.10 | 6.30 | 8.23 | 1.54 | 5.34 | 8.48 | 1.88 | 4.51 | 7.86 | 2.11 | 3.73 | 7.68 | 2.43 | 3.16 | / | / | / |
| 25 | 5.86 | 0.54 | 10.85 | 5.82 | 0.61 | 9.54 | 5.76 | 0.68 | 8.47 | 7.02 | 0.96 | 7.32 | 8.35 | 1.36 | 6.14 | 8.77 | 1.70 | 5.16 | 7.96 | 1.88 | 4.23 | 7.25 | 2.23 | 3.25 | / | / | / |
| 30 | 6.80 | 0.58 | 11.72 | 6.93 | 0.69 | 10.04 | 7.78 | 0.89 | 8.74 | 8.19 | 1.09 | 7.51 | 8.48 | 1.38 | 6.14 | 8.91 | 1.62 | 5.50 | 8.56 | 1.82 | 4.70 | 7.30 | 2.20 | 3.32 | / | / | / |
| 35 | 7.19 | 0.56 | 12.85 | 7.39 | 0.69 | 10.71 | 8.13 | 0.88 | 9.24 | 8.56 | 1.08 | 7.92 | 8.54 | 1.32 | 6.47 | 9.22 | 1.58 | 5.84 | 8.86 | 1.74 | 5.09 | / | / | / | / | / | / |
| 40 | 7.59 | 0.58 | 13.09 | 7.91 | 0.69 | 11.46 | 8.71 | 0.88 | 9.89 | 9.04 | 1.07 | 8.45 | 9.00 | 1.28 | 7.03 | 9.55 | 1.57 | 6.08 | / | / | / | / | / | / | / | / | / |
| 43 | 8.06 | 0.57 | 14.14 | 8.33 | 0.67 | 12.43 | 9.17 | 0.87 | 10.54 | 9.59 | 1.06 | 9.05 | 9.70 | 1.27 | 7.64 | 9.95 | 1.53 | 6.50 | / | / | / | / | / | / | / | / | / |

*Abbreviazioni:*

*LWT: Temperatura dell'acqua in uscita (°C )*

*DB: Temperatura a bulbo secco perla temperatura dell'aria esterna (°C )*

*HC: Capacità di riscaldamento totale (kW)*

*PI: Potenza in ingresso (kW)*

*Tabella 2-5.4: Capacitò di riscaldamento per THMLd-14D(S)/HBp-A*

| Massimo | | | | | | | | | | | | | | | | | | | | | | | | | | | |
|---|---|---|---|---|---|---|---|---|---|---|---|---|---|---|---|---|---|---|---|---|---|---|---|---|---|---|---|
| DB | LWT | | | | | | | | | | | | | | | | | | | | | | | | | | |
| | 25 | | | 30 | | | 35 | | | 40 | | | 45 | | | 50 | | | 55 | | | 60 | | | 65 | | |
| | HC | PI | COP | HC | PI | COP | HC | PI | COP | HC | PI | COP | HC | PI | COP | HC | PI | COP | HC | PI | COP | HC | PI | COP | HC | PI | COP |
| -25 | 6.57 | 3.09 | 2.13 | 6.73 | 3.20 | 2.10 | 5.40 | 3.18 | 1.70 | 4.87 | 3.35 | 1.45 | 4.45 | 3.47 | 1.28 | / | / | / | / | / | / | / | / | / | / | / | / |
| -20 | 8.22 | 3.22 | 2.55 | 8.26 | 3.30 | 2.50 | 7.75 | 3.58 | 2.17 | 6.86 | 3.65 | 1.88 | 6.22 | 3.61 | 1.72 | 5.39 | 3.61 | 1.49 | 5.11 | 3.87 | 1.32 | / | / | / | / | / | / |
| -15 | 9.56 | 3.40 | 2.81 | 9.52 | 3.65 | 2.61 | 9.52 | 3.94 | 2.42 | 8.53 | 3.95 | 2.16 | 7.59 | 4.12 | 1.84 | 6.97 | 4.32 | 1.61 | 6.43 | 4.58 | 1.40 | 5.98 | 5.05 | 1.18 | / | / | / |
| -10 | 11.84 | 3.81 | 3.11 | 11.34 | 4.18 | 2.71 | 10.95 | 4.44 | 2.47 | 10.55 | 4.70 | 2.24 | 9.59 | 4.73 | 2.03 | 9.02 | 5.01 | 1.80 | 8.68 | 5.21 | 1.67 | 6.70 | 5.30 | 1.26 | / | / | / |
| -7 | 13.63 | 4.02 | 3.39 | 12.84 | 4.28 | 3.00 | 12.64 | 4.55 | 2.78 | 12.24 | 4.94 | 2.48 | 11.84 | 5.17 | 2.29 | 10.95 | 5.33 | 2.05 | 11.24 | 5.46 | 2.06 | 7.98 | 5.31 | 1.50 | / | / | / |
| -5 | 13.83 | 3.78 | 3.66 | 13.13 | 3.87 | 3.39 | 12.44 | 4.16 | 2.99 | 12.54 | 4.61 | 2.72 | 12.04 | 4.99 | 2.41 | 11.14 | 5.24 | 2.13 | 11.04 | 5.32 | 2.08 | 8.21 | 5.06 | 1.62 | / | / | / |
| 0 | 14.23 | 3.40 | 4.18 | 13.63 | 3.54 | 3.85 | 12.34 | 3.82 | 3.23 | 12.94 | 4.32 | 2.99 | 12.64 | 4.85 | 2.61 | 11.84 | 4.99 | 2.37 | 11.74 | 5.19 | 2.26 | 9.29 | 5.48 | 1.70 | / | / | / |
| 5 | 15.32 | 2.93 | 5.23 | 14.83 | 3.30 | 4.49 | 14.23 | 3.63 | 3.92 | 14.23 | 3.95 | 3.60 | 14.23 | 4.59 | 3.10 | 13.73 | 4.98 | 2.76 | 13.73 | 5.18 | 2.65 | 11.64 | 5.38 | 2.16 | 9.71 | 5.33 | 1.82 |
| 7 | 16.22 | 2.81 | 5.77 | 15.52 | 3.15 | 4.93 | 15.42 | 3.37 | 4.58 | 15.52 | 3.86 | 4.02 | 15.62 | 4.35 | 3.59 | 14.93 | 4.81 | 3.10 | 14.43 | 4.92 | 2.93 | 13.13 | 5.20 | 2.53 | 10.35 | 4.95 | 2.09 |
| 10 | 15.42 | 2.28 | 6.76 | 15.42 | 2.89 | 5.34 | 14.83 | 3.10 | 4.78 | 15.22 | 3.60 | 4.23 | 14.93 | 4.08 | 3.66 | 15.22 | 4.62 | 3.30 | 14.13 | 4.60 | 3.07 | 13.13 | 4.91 | 2.67 | 11.14 | 4.98 | 2.24 |
| 15 | 15.22 | 2.01 | 7.57 | 15.12 | 2.62 | 5.77 | 15.12 | 2.94 | 5.14 | 15.72 | 3.56 | 4.42 | 15.42 | 3.98 | 3.88 | 15.22 | 4.37 | 3.48 | 12.94 | 4.02 | 3.22 | 12.64 | 4.48 | 2.82 | 11.84 | 4.97 | 2.38 |
| 20 | 14.83 | 1.78 | 8.33 | 14.73 | 2.20 | 6.69 | 14.53 | 2.59 | 5.61 | 15.12 | 3.04 | 4.98 | 15.02 | 3.42 | 4.39 | 14.93 | 3.84 | 3.89 | 12.64 | 3.62 | 3.49 | 10.95 | 3.77 | 2.90 | / | / | / |
| 25 | 14.83 | 1.64 | 9.04 | 14.63 | 1.92 | 7.62 | 14.53 | 2.38 | 6.10 | 14.83 | 2.68 | 5.53 | 14.63 | 2.98 | 4.91 | 14.63 | 3.43 | 4.26 | 12.44 | 3.28 | 3.79 | 10.15 | 3.40 | 2.99 | / | / | / |

| | | | | | | | | | | | | | | | | | | | | | | | | | | | |
|---|---|---|---|---|---|---|---|---|---|---|---|---|---|---|---|---|---|---|---|---|---|---|---|---|---|---|---|
| 30 | 15.22 | 1.55 | 9.82 | 14.73 | 1.80 | 8.18 | 14.83 | 2.10 | 7.06 | 15.02 | 2.42 | 6.21 | 14.93 | 2.80 | 5.33 | 14.53 | 3.14 | 4.63 | 12.74 | 2.93 | 4.35 | 10.25 | 3.40 | 3.01 | / | / | / |
| 35 | 15.92 | 1.45 | 10.98 | 15.32 | 1.70 | 9.01 | 14.93 | 1.87 | 7.98 | 15.42 | 2.26 | 6.82 | 15.22 | 2.65 | 5.74 | 14.73 | 2.95 | 4.99 | 12.94 | 2.77 | 4.67 | / | / | / | / | / | / |
| 40 | 16.12 | 1.40 | 11.51 | 16.32 | 1.59 | 10.26 | 16.12 | 1.89 | 8.53 | 15.92 | 2.20 | 7.24 | 15.72 | 2.59 | 6.07 | 14.93 | 2.78 | 5.37 | / | / | / | / | / | / | / | / | / |
| 43 | 16.42 | 1.36 | 12.07 | 16.62 | 1.54 | 10.79 | 16.42 | 1.88 | 8.73 | 16.22 | 2.12 | 7.65 | 16.02 | 2.56 | 6.26 | 15.12 | 2.73 | 5.54 | / | / | / | / | / | / | / | / | / |

Normale

| DB | LWT | | | | | | | | | | | | | | | | | | | | | | | | | | |
|---|---|---|---|---|---|---|---|---|---|---|---|---|---|---|---|---|---|---|---|---|---|---|---|---|---|---|---|
| | 25 | | | 30 | | | 35 | | | 40 | | | 45 | | | 50 | | | 55 | | | 60 | | | 65 | | |
| | HC | PI | COP | HC | PI | COP | HC | PI | COP | HC | PI | COP | HC | PI | COP | HC | PI | COP | HC | PI | COP | HC | PI | COP | HC | PI | COP |
| -25 | 5.62 | 2.48 | 2.27 | 5.72 | 2.55 | 2.24 | 4.55 | 2.55 | 1.78 | 4.17 | 2.76 | 1.51 | 3.86 | 2.97 | 1.30 | / | / | / | / | / | / | / | / | / | / | / | / |
| -20 | 7.23 | 2.63 | 2.75 | 7.23 | 2.67 | 2.71 | 6.72 | 2.92 | 2.30 | 6.04 | 3.06 | 1.97 | 5.45 | 3.08 | 1.77 | 4.75 | 3.08 | 1.54 | 4.67 | 3.52 | 1.33 | / | / | / | / | / | / |
| -15 | 7.99 | 2.63 | 3.04 | 7.90 | 2.79 | 2.83 | 7.82 | 3.03 | 2.58 | 7.12 | 3.12 | 2.28 | 6.21 | 3.26 | 1.90 | 5.73 | 3.42 | 1.68 | 5.38 | 3.81 | 1.41 | 5.06 | 4.31 | 1.18 | / | / | / |
| -10 | 9.75 | 2.96 | 3.29 | 9.31 | 3.22 | 2.89 | 8.85 | 3.43 | 2.58 | 8.72 | 3.74 | 2.33 | 8.03 | 3.85 | 2.09 | 7.59 | 4.08 | 1.86 | 7.30 | 4.26 | 1.71 | 5.70 | 4.44 | 1.28 | / | / | / |
| -7 | 12.64 | 3.56 | 3.55 | 12.14 | 3.94 | 3.08 | 11.94 | 4.21 | 2.84 | 11.84 | 4.46 | 2.65 | 11.74 | 5.02 | 2.34 | 10.85 | 5.15 | 2.11 | 10.95 | 5.37 | 2.04 | 7.37 | 4.77 | 1.55 | / | / | / |
| -5 | 11.54 | 2.89 | 3.99 | 10.75 | 2.96 | 3.63 | 9.93 | 3.11 | 3.19 | 10.15 | 3.45 | 2.94 | 9.63 | 3.77 | 2.55 | 8.74 | 3.96 | 2.21 | 8.79 | 4.05 | 2.17 | 6.74 | 4.04 | 1.67 | / | / | / |
| 0 | 11.34 | 2.48 | 4.57 | 10.75 | 2.58 | 4.17 | 9.47 | 2.72 | 3.48 | 10.05 | 3.08 | 3.26 | 9.69 | 3.48 | 2.78 | 8.74 | 3.62 | 2.41 | 8.74 | 3.70 | 2.36 | 7.14 | 4.08 | 1.75 | / | / | / |
| 5 | 12.34 | 2.15 | 5.74 | 11.84 | 2.42 | 4.89 | 11.04 | 2.60 | 4.25 | 11.14 | 2.83 | 3.94 | 11.04 | 3.31 | 3.34 | 10.45 | 3.60 | 2.90 | 10.55 | 3.77 | 2.80 | 9.26 | 4.11 | 2.25 | 8.02 | 4.19 | 1.91 |
| 7 | 15.12 | 2.43 | 6.22 | 14.43 | 2.77 | 5.21 | 14.43 | 3.15 | 4.58 | 14.53 | 3.52 | 4.13 | 14.03 | 3.92 | 3.58 | 13.93 | 4.40 | 3.17 | 13.73 | 4.68 | 2.93 | 12.24 | 4.73 | 2.59 | 9.66 | 4.50 | 2.15 |
| 10 | 12.24 | 1.63 | 7.51 | 12.04 | 2.07 | 5.82 | 11.24 | 2.17 | 5.18 | 11.74 | 2.52 | 4.66 | 11.34 | 2.87 | 3.95 | 11.34 | 3.30 | 3.44 | 10.55 | 3.31 | 3.19 | 10.25 | 3.71 | 2.76 | 9.06 | 3.88 | 2.34 |
| 15 | 12.14 | 1.43 | 8.49 | 11.84 | 1.87 | 6.33 | 11.54 | 2.05 | 5.63 | 12.24 | 2.49 | 4.92 | 11.84 | 2.80 | 4.23 | 11.44 | 3.11 | 3.68 | 9.79 | 2.88 | 3.40 | 9.95 | 3.38 | 2.94 | 9.63 | 3.78 | 2.55 |
| 20 | 11.64 | 1.25 | 9.31 | 11.44 | 1.54 | 7.43 | 11.04 | 1.77 | 6.24 | 11.64 | 2.08 | 5.60 | 11.44 | 2.35 | 4.87 | 11.04 | 2.68 | 4.12 | 9.48 | 2.55 | 3.72 | 8.50 | 2.78 | 3.06 | / | / | / |
| 25 | 11.74 | 1.15 | 10.21 | 11.54 | 1.35 | 8.55 | 11.04 | 1.63 | 6.78 | 11.44 | 1.66 | 6.89 | 11.24 | 2.06 | 5.46 | 10.95 | 2.41 | 4.54 | 9.35 | 2.32 | 4.03 | 7.91 | 2.53 | 3.13 | / | / | / |
| 30 | 12.14 | 1.11 | 10.94 | 11.64 | 1.29 | 9.02 | 11.34 | 1.46 | 7.77 | 11.64 | 1.54 | 7.56 | 11.54 | 2.05 | 5.63 | 10.95 | 2.24 | 4.89 | 9.69 | 2.13 | 4.55 | 8.13 | 2.58 | 3.15 | / | / | / |
| 35 | 12.94 | 1.06 | 12.20 | 12.34 | 1.25 | 9.87 | 11.74 | 1.36 | 8.63 | 12.24 | 1.67 | 7.33 | 11.94 | 1.96 | 6.09 | 11.34 | 2.13 | 5.33 | 10.05 | 2.05 | 4.90 | / | / | / | / | / | / |
| 40 | 13.43 | 1.04 | 12.92 | 13.53 | 1.19 | 11.37 | 13.03 | 1.41 | 9.24 | 12.94 | 1.65 | 7.84 | 12.64 | 1.96 | 6.45 | 11.74 | 2.04 | 5.76 | / | / | / | / | / | / | / | / | / |
| 43 | 14.03 | 1.02 | 13.75 | 14.03 | 1.17 | 11.99 | 13.53 | 1.41 | 9.60 | 13.43 | 1.61 | 8.34 | 13.13 | 1.96 | 6.70 | 12.14 | 2.04 | 5.95 | / | / | / | / | / | / | / | / | / |

Minimo

| DB | LWT | | | | | | | | | | | | | | | | | | | | | | | | | | |
|---|---|---|---|---|---|---|---|---|---|---|---|---|---|---|---|---|---|---|---|---|---|---|---|---|---|---|---|
| | 25 | | | 25 | | | 25 | | | 25 | | | 25 | | | 25 | | | 25 | | | 25 | | | 25 | | |
| | HC | PI | COP | HC | PI | COP | HC | PI | COP | HC | PI | COP | HC | PI | COP | HC | PI | COP | HC | PI | COP | HC | PI | COP | HC | PI | COP |
| -25 | 3.74 | 1.62 | 2.31 | 4.00 | 1.74 | 2.30 | 3.52 | 1.94 | 1.82 | 3.31 | 2.17 | 1.53 | 2.99 | 2.29 | 1.30 | / | / | / | / | / | / | / | / | / | / | / | / |
| -20 | 4.56 | 1.63 | 2.80 | 4.75 | 1.73 | 2.74 | 4.38 | 1.87 | 2.34 | 4.00 | 1.99 | 2.01 | 4.04 | 2.31 | 1.75 | 3.77 | 2.47 | 1.53 | 3.63 | 2.76 | 1.32 | / | / | / | / | / | / |
| -15 | 5.21 | 1.68 | 3.10 | 5.37 | 1.85 | 2.90 | 5.28 | 2.00 | 2.64 | 4.89 | 2.09 | 2.34 | 4.86 | 2.56 | 1.90 | 4.82 | 2.87 | 1.68 | 4.50 | 3.17 | 1.42 | 4.31 | 3.65 | 1.18 | / | / | / |
| -10 | 5.02 | 1.47 | 3.42 | 5.05 | 1.68 | 3.01 | 4.74 | 1.79 | 2.65 | 4.78 | 1.99 | 2.40 | 4.98 | 2.35 | 2.12 | 5.14 | 2.71 | 1.90 | 5.37 | 3.08 | 1.74 | 4.49 | 3.43 | 1.31 | / | / | / |
| -7 | 5.11 | 1.34 | 3.82 | 4.53 | 1.35 | 3.35 | 4.55 | 1.48 | 3.07 | 4.94 | 1.77 | 2.79 | 6.18 | 2.46 | 2.51 | 5.93 | 2.71 | 2.19 | 6.22 | 2.90 | 2.14 | 5.19 | 3.26 | 1.59 | / | / | / |
| -5 | 5.32 | 1.28 | 4.16 | 4.76 | 1.25 | 3.80 | 4.59 | 1.38 | 3.32 | 5.16 | 1.69 | 3.06 | 6.37 | 2.41 | 2.64 | 6.12 | 2.69 | 2.27 | 6.43 | 2.88 | 2.23 | 5.41 | 3.15 | 1.72 | / | / | / |
| 0 | 5.70 | 1.19 | 4.79 | 5.31 | 1.22 | 4.36 | 4.77 | 1.31 | 3.64 | 5.54 | 1.63 | 3.40 | 6.89 | 2.39 | 2.88 | 6.58 | 2.67 | 2.46 | 6.87 | 2.81 | 2.44 | 6.14 | 3.39 | 1.81 | / | / | / |
| 5 | 6.20 | 1.03 | 6.02 | 5.86 | 1.14 | 5.14 | 5.55 | 1.24 | 4.48 | 6.15 | 1.49 | 4.13 | 7.82 | 2.25 | 3.48 | 7.82 | 2.59 | 3.02 | 8.64 | 2.98 | 2.90 | 7.91 | 3.38 | 2.34 | 6.85 | 3.44 | 1.99 |
| 7 | 6.45 | 0.96 | 6.72 | 6.00 | 1.06 | 5.66 | 5.89 | 1.12 | 5.26 | 6.61 | 1.42 | 4.65 | 8.46 | 2.09 | 4.05 | 8.39 | 2.46 | 3.41 | 9.00 | 2.78 | 3.24 | 8.84 | 3.21 | 2.75 | 7.21 | 3.14 | 2.30 |
| 10 | 6.31 | 0.80 | 7.89 | 6.15 | 1.00 | 6.15 | 5.81 | 1.06 | 5.48 | 6.63 | 1.35 | 4.91 | 8.24 | 2.00 | 4.12 | 8.73 | 2.40 | 3.64 | 8.92 | 2.67 | 3.34 | 8.97 | 3.10 | 2.90 | 7.91 | 3.23 | 2.45 |
| 15 | 5.98 | 0.67 | 8.93 | 5.94 | 0.89 | 6.67 | 5.90 | 1.00 | 5.90 | 7.29 | 1.42 | 5.14 | 8.55 | 1.94 | 4.41 | 9.42 | 2.43 | 3.88 | 8.41 | 2.38 | 3.53 | 8.99 | 2.93 | 3.07 | 8.68 | 3.29 | 2.64 |
| 20 | 5.92 | 0.60 | 9.87 | 5.90 | 0.76 | 7.76 | 5.80 | 0.89 | 6.52 | 7.12 | 1.22 | 5.84 | 8.44 | 1.68 | 5.02 | 9.30 | 2.14 | 4.35 | 8.32 | 2.15 | 3.87 | 7.84 | 2.47 | 3.17 | / | / | / |
| 25 | 6.06 | 0.57 | 10.63 | 6.02 | 0.68 | 8.85 | 5.93 | 0.83 | 7.14 | 7.13 | 1.10 | 6.49 | 8.38 | 1.48 | 5.66 | 9.28 | 1.94 | 4.79 | 8.28 | 1.98 | 4.18 | 7.34 | 2.26 | 3.25 | / | / | / |
| 30 | 7.07 | 0.62 | 11.41 | 7.22 | 0.76 | 9.50 | 8.06 | 1.01 | 7.98 | 8.39 | 1.20 | 6.99 | 8.64 | 1.46 | 5.92 | 9.32 | 1.81 | 5.15 | 8.66 | 1.81 | 4.78 | 7.30 | 2.20 | 3.32 | / | / | / |
| 35 | 7.59 | 0.59 | 12.87 | 7.65 | 0.73 | 10.48 | 8.28 | 0.91 | 9.10 | 8.79 | 1.13 | 7.78 | 8.94 | 1.40 | 6.38 | 9.58 | 1.72 | 5.57 | 8.93 | 1.73 | 5.16 | / | / | / | / | / | / |
| 40 | 7.85 | 0.57 | 13.77 | 8.33 | 0.69 | 12.07 | 9.11 | 0.93 | 9.80 | 9.05 | 1.09 | 8.31 | 9.24 | 1.36 | 6.80 | 9.84 | 1.63 | 6.04 | / | / | / | / | / | / | / | / | / |
| 43 | 8.26 | 0.57 | 14.49 | 8.75 | 0.69 | 12.68 | 9.54 | 0.94 | 10.15 | 9.48 | 1.07 | 8.86 | 9.19 | 1.31 | 7.02 | 10.25 | 1.63 | 6.29 | / | / | / | / | / | / | / | / | / |

*Abbreviazioni:*

*LWT: Temperatura dell'acqua in uscita (°C )*

*DB: Temperatura a bulbo secco perla temperatura dell'aria esterna (°C )*

*HC: Capacità di riscaldamento totale (kW)*

*PI: Potenza in ingresso (kW)*

*Tabella 2-5.5: Capacitò di riscaldamento per THMLd-16D(S)/HBp-A*

| Massimo | | | | | | | | | | | | | | | | | | | | | | | | | | | |
|---|---|---|---|---|---|---|---|---|---|---|---|---|---|---|---|---|---|---|---|---|---|---|---|---|---|---|---|
| DB | LWT | | | | | | | | | | | | | | | | | | | | | | | | | | |
| | 25 | | | 30 | | | 35 | | | 40 | | | 45 | | | 50 | | | 55 | | | 60 | | | 65 | | |
| | HC | PI | COP | HC | PI | COP | HC | PI | COP | HC | PI | COP | HC | PI | COP | HC | PI | COP | HC | PI | COP | HC | PI | COP | HC | PI | COP |
| -25 | 7.65 | 4.03 | 1.90 | 7.95 | 4.22 | 1.88 | 6.58 | 4.01 | 1.64 | 5.86 | 4.43 | 1.32 | 4.94 | 4.21 | 1.17 | / | / | / | / | / | / | / | / | / | / | / | / |
| -20 | 9.52 | 3.94 | 2.42 | 9.66 | 4.43 | 2.18 | 8.12 | 4.77 | 1.70 | 7.44 | 4.76 | 1.56 | 6.52 | 4.85 | 1.34 | 5.82 | 4.54 | 1.28 | 5.34 | 4.75 | 1.12 | / | / | / | / | / | / |
| -15 | 11.74 | 4.37 | 2.69 | 11.24 | 4.60 | 2.44 | 10.65 | 4.93 | 2.16 | 10.05 | 5.24 | 1.92 | 8.98 | 5.38 | 1.67 | 7.49 | 5.32 | 1.41 | 6.79 | 5.29 | 1.28 | 6.39 | 5.59 | 1.14 | / | / | / |
| -10 | 13.33 | 4.51 | 2.96 | 12.94 | 4.78 | 2.71 | 12.64 | 5.09 | 2.48 | 12.34 | 5.43 | 2.27 | 11.04 | 5.61 | 1.97 | 9.44 | 5.56 | 1.70 | 8.88 | 5.88 | 1.51 | 7.00 | 5.59 | 1.25 | / | / | / |
| -7 | 14.23 | 4.59 | 3.10 | 14.03 | 4.89 | 2.87 | 13.83 | 5.19 | 2.66 | 13.73 | 5.55 | 2.47 | 13.03 | 6.02 | 2.17 | 12.84 | 6.22 | 2.06 | 12.54 | 6.29 | 1.99 | 8.21 | 6.18 | 1.33 | / | / | / |
| -5 | 14.53 | 4.27 | 3.40 | 14.23 | 4.61 | 3.09 | 13.93 | 4.93 | 2.83 | 13.73 | 5.33 | 2.58 | 13.33 | 5.88 | 2.27 | 12.94 | 5.82 | 2.22 | 12.54 | 5.92 | 2.12 | 8.58 | 5.97 | 1.44 | / | / | / |
| 0 | 15.02 | 3.49 | 4.31 | 14.63 | 3.91 | 3.74 | 14.23 | 4.27 | 3.33 | 13.83 | 4.80 | 2.88 | 14.03 | 5.33 | 2.63 | 13.33 | 5.14 | 2.59 | 12.74 | 5.42 | 2.35 | 9.51 | 5.54 | 1.72 | / | / | / |
| 5 | 16.72 | 3.25 | 5.14 | 14.53 | 3.61 | 4.02 | 16.02 | 4.00 | 4.00 | 15.52 | 4.57 | 3.40 | 15.82 | 4.96 | 3.19 | 15.22 | 5.05 | 3.01 | 14.43 | 5.21 | 2.77 | 12.64 | 5.36 | 2.36 | 10.65 | 5.24 | 2.03 |
| 7 | 17.41 | 3.16 | 5.51 | 15.62 | 3.12 | 5.01 | 16.72 | 3.79 | 4.41 | 16.32 | 4.25 | 3.84 | 16.52 | 4.71 | 3.51 | 16.12 | 5.05 | 3.19 | 16.12 | 5.53 | 2.91 | 14.03 | 5.34 | 2.63 | 11.24 | 5.13 | 2.19 |
| 10 | 17.91 | 3.01 | 5.95 | 16.32 | 3.34 | 4.89 | 17.51 | 3.73 | 4.69 | 17.01 | 4.33 | 3.93 | 17.21 | 4.72 | 3.65 | 16.62 | 5.12 | 3.25 | 16.02 | 5.16 | 3.10 | 14.23 | 5.15 | 2.76 | 12.14 | 4.97 | 2.44 |
| 15 | 18.81 | 2.76 | 6.81 | 19.20 | 3.08 | 6.23 | 18.81 | 3.48 | 5.40 | 18.21 | 4.08 | 4.46 | 18.41 | 4.53 | 4.06 | 17.71 | 4.79 | 3.70 | 17.41 | 5.11 | 3.41 | 14.63 | 4.83 | 3.03 | 12.44 | 4.80 | 2.59 |
| 20 | 16.62 | 2.08 | 7.99 | 16.82 | 2.38 | 7.07 | 16.62 | 2.69 | 6.18 | 17.31 | 3.40 | 5.09 | 16.02 | 3.77 | 4.25 | 14.53 | 4.06 | 3.58 | 14.93 | 4.32 | 3.45 | 13.03 | 4.39 | 2.97 | / | / | / |
| 25 | 16.12 | 1.83 | 8.81 | 16.12 | 2.23 | 7.23 | 15.92 | 2.31 | 6.89 | 16.52 | 2.87 | 5.76 | 15.62 | 3.23 | 4.84 | 14.43 | 3.46 | 4.17 | 14.03 | 3.68 | 3.81 | 12.34 | 4.05 | 3.05 | / | / | / |
| 30 | 15.52 | 1.55 | 10.01 | 15.42 | 1.88 | 8.20 | 15.32 | 2.00 | 7.66 | 15.82 | 2.45 | 6.46 | 15.22 | 2.81 | 5.42 | 14.33 | 3.01 | 4.76 | 13.13 | 3.15 | 4.17 | 12.64 | 4.11 | 3.07 | / | / | / |
| 35 | 16.22 | 1.50 | 10.81 | 16.52 | 1.84 | 8.98 | 16.22 | 1.94 | 8.36 | 16.52 | 2.42 | 6.83 | 15.82 | 2.79 | 5.67 | 14.93 | 3.00 | 4.98 | 13.33 | 3.07 | 4.34 | / | / | / | / | / | / |
| 40 | 16.82 | 1.47 | 11.44 | 17.51 | 1.75 | 10.01 | 17.11 | 1.88 | 9.10 | 17.31 | 2.40 | 7.21 | 16.32 | 2.78 | 5.87 | 15.52 | 2.98 | 5.21 | / | / | / | / | / | / | / | / | / |
| 43 | 17.11 | 1.46 | 11.72 | 17.91 | 1.71 | 10.47 | 17.51 | 1.88 | 9.31 | 17.61 | 2.39 | 7.37 | 16.62 | 2.70 | 6.15 | 15.82 | 2.94 | 5.38 | / | / | / | / | / | / | / | / | / |

| Normale | | | | | | | | | | | | | | | | | | | | | | | | | | | |
|---|---|---|---|---|---|---|---|---|---|---|---|---|---|---|---|---|---|---|---|---|---|---|---|---|---|---|---|
| DB | LWT | | | | | | | | | | | | | | | | | | | | | | | | | | |
| | 25 | | | 30 | | | 35 | | | 40 | | | 45 | | | 50 | | | 55 | | | 60 | | | 65 | | |
| | HC | PI | COP | HC | PI | COP | HC | PI | COP | HC | PI | COP | HC | PI | COP | HC | PI | COP | HC | PI | COP | HC | PI | COP | HC | PI | COP |
| -25 | 6.54 | 3.24 | 2.02 | 6.76 | 3.29 | 2.05 | 5.54 | 3.21 | 1.73 | 5.01 | 3.65 | 1.37 | 4.28 | 3.60 | 1.19 | / | / | / | / | / | / | / | / | / | / | / | / |
| -20 | 8.38 | 3.29 | 2.55 | 8.46 | 3.59 | 2.36 | 7.03 | 3.88 | 1.81 | 6.56 | 3.99 | 1.64 | 5.71 | 4.14 | 1.38 | 5.12 | 3.88 | 1.32 | 4.87 | 4.33 | 1.12 | / | / | / | / | / | / |
| -15 | 9.84 | 3.37 | 2.92 | 9.30 | 3.52 | 2.64 | 8.76 | 3.79 | 2.31 | 8.37 | 4.14 | 2.02 | 7.34 | 4.26 | 1.72 | 6.15 | 4.21 | 1.46 | 5.68 | 4.40 | 1.29 | 5.40 | 4.77 | 1.13 | / | / | / |
| -10 | 11.04 | 3.51 | 3.15 | 10.65 | 3.68 | 2.89 | 10.25 | 3.95 | 2.59 | 10.25 | 4.34 | 2.36 | 9.20 | 4.59 | 2.01 | 7.94 | 4.55 | 1.75 | 7.47 | 4.83 | 1.55 | 5.96 | 4.69 | 1.27 | / | / | / |
| -7 | 13.83 | 4.27 | 3.24 | 13.43 | 4.44 | 3.03 | 13.03 | 4.85 | 2.69 | 13.03 | 4.98 | 2.62 | 12.74 | 5.69 | 2.24 | 12.34 | 5.83 | 2.12 | 12.44 | 6.25 | 1.99 | 7.65 | 5.60 | 1.37 | / | / | / |
| -5 | 12.04 | 3.21 | 3.75 | 11.64 | 3.49 | 3.34 | 11.14 | 3.65 | 3.05 | 11.14 | 3.98 | 2.80 | 10.65 | 4.44 | 2.40 | 10.15 | 4.83 | 2.10 | 9.93 | 4.50 | 2.21 | 7.04 | 4.76 | 1.48 | / | / | / |
| 0 | 11.94 | 2.54 | 4.70 | 11.44 | 2.86 | 4.00 | 10.85 | 3.05 | 3.56 | 10.65 | 3.43 | 3.10 | 10.75 | 3.83 | 2.81 | 10.05 | 4.00 | 2.51 | 9.72 | 3.91 | 2.49 | 7.62 | 4.30 | 1.77 | / | / | / |
| 5 | 13.43 | 2.37 | 5.67 | 11.64 | 2.64 | 4.41 | 12.44 | 2.85 | 4.36 | 12.24 | 3.27 | 3.74 | 12.24 | 3.58 | 3.42 | 11.54 | 3.90 | 2.96 | 11.04 | 3.79 | 2.91 | 10.05 | 4.09 | 2.46 | 8.80 | 4.24 | 2.07 |
| 7 | 16.92 | 2.87 | 5.89 | 15.12 | 2.98 | 5.08 | 15.82 | 3.53 | 4.48 | 15.62 | 3.99 | 3.92 | 15.92 | 4.57 | 3.48 | 15.92 | 4.92 | 3.24 | 15.92 | 5.61 | 2.84 | 13.13 | 4.86 | 2.70 | 10.15 | 4.60 | 2.21 |
| 10 | 14.13 | 2.14 | 6.60 | 12.74 | 2.36 | 5.40 | 13.33 | 2.59 | 5.15 | 13.13 | 3.01 | 4.36 | 13.13 | 3.33 | 3.94 | 12.44 | 3.66 | 3.40 | 12.04 | 3.71 | 3.25 | 11.14 | 3.88 | 2.87 | 9.87 | 3.93 | 2.51 |
| 15 | 14.93 | 1.97 | 7.58 | 15.12 | 2.20 | 6.87 | 14.43 | 2.43 | 5.94 | 14.13 | 2.84 | 4.98 | 14.13 | 3.19 | 4.43 | 13.33 | 3.41 | 3.91 | 13.13 | 3.67 | 3.58 | 11.54 | 3.64 | 3.17 | 10.15 | 3.81 | 2.66 |
| 20 | 13.13 | 1.46 | 9.00 | 13.13 | 1.67 | 7.86 | 12.64 | 1.84 | 6.87 | 13.23 | 2.32 | 5.70 | 12.14 | 2.59 | 4.69 | 10.85 | 2.83 | 3.83 | 11.14 | 3.04 | 3.67 | 10.15 | 3.24 | 3.13 | / | / | / |
| 25 | 12.74 | 1.29 | 9.87 | 12.64 | 1.57 | 8.05 | 12.14 | 1.59 | 7.63 | 12.84 | 1.78 | 7.21 | 11.94 | 2.24 | 5.33 | 10.75 | 2.43 | 4.42 | 10.55 | 2.60 | 4.06 | 9.68 | 3.01 | 3.22 | / | / | / |

| | | | | | | | | | | | | | | | | | | | | | | | | | | | |
|---|---|---|---|---|---|---|---|---|---|---|---|---|---|---|---|---|---|---|---|---|---|---|---|---|---|---|---|
| 30 | 12.44 | 1.11 | 11.20 | 12.14 | 1.35 | 8.99 | 11.74 | 1.40 | 8.39 | 12.34 | 1.55 | 7.96 | 11.74 | 2.06 | 5.70 | 10.85 | 2.15 | 5.04 | 9.95 | 2.29 | 4.34 | 10.05 | 3.12 | 3.22 | / | / | / |
| 35 | 13.23 | 1.10 | 12.03 | 13.23 | 1.35 | 9.80 | 12.74 | 1.41 | 9.03 | 13.13 | 1.79 | 7.34 | 12.44 | 2.07 | 6.01 | 11.44 | 2.16 | 5.30 | 10.35 | 2.27 | 4.56 | / | / | / | / | / | / |
| 40 | 14.03 | 1.10 | 12.75 | 14.53 | 1.31 | 11.09 | 13.83 | 1.40 | 9.88 | 14.03 | 1.80 | 7.79 | 13.13 | 2.10 | 6.25 | 12.24 | 2.19 | 5.59 | / | / | / | / | / | / | / | / | / |
| 43 | 14.63 | 1.10 | 13.30 | 15.02 | 1.29 | 11.65 | 14.33 | 1.41 | 10.16 | 14.63 | 1.81 | 8.08 | 13.63 | 2.06 | 6.62 | 12.74 | 2.19 | 5.82 | / | / | / | / | / | / | / | / | / |

| Minimo | | | | | | | | | | | | | | | | | | | | | | | | | | | |
|---|---|---|---|---|---|---|---|---|---|---|---|---|---|---|---|---|---|---|---|---|---|---|---|---|---|---|---|
| DB | LWT | | | | | | | | | | | | | | | | | | | | | | | | | | |
| | 25 | | | 25 | | | 25 | | | 25 | | | 25 | | | 25 | | | 25 | | | 25 | | | 25 | | |
| | HC | PI | COP | HC | PI | COP | HC | PI | COP | HC | PI | COP | HC | PI | COP | HC | PI | COP | HC | PI | COP | HC | PI | COP | HC | PI | COP |
| -25 | 4.36 | 2.11 | 2.07 | 4.72 | 2.25 | 2.10 | 4.28 | 2.44 | 1.75 | 3.99 | 2.86 | 1.40 | 3.31 | 2.77 | 1.20 | / | / | / | / | / | / | / | / | / | / | / | / |
| -20 | 5.28 | 2.04 | 2.59 | 5.55 | 2.33 | 2.38 | 4.59 | 2.50 | 1.83 | 4.34 | 2.60 | 1.67 | 4.23 | 3.10 | 1.36 | 4.08 | 3.11 | 1.31 | 3.79 | 3.38 | 1.12 | / | / | / | / | / | / |
| -15 | 6.42 | 2.15 | 2.99 | 6.34 | 2.34 | 2.71 | 5.91 | 2.50 | 2.36 | 5.74 | 2.77 | 2.07 | 5.75 | 3.33 | 1.73 | 5.17 | 3.54 | 1.46 | 4.76 | 3.66 | 1.30 | 4.60 | 4.04 | 1.14 | / | / | / |
| -10 | 5.67 | 1.74 | 3.26 | 5.77 | 1.93 | 2.99 | 5.49 | 2.06 | 2.67 | 5.60 | 2.31 | 2.43 | 5.72 | 2.80 | 2.04 | 5.38 | 3.03 | 1.78 | 5.50 | 3.49 | 1.58 | 4.69 | 3.62 | 1.29 | / | / | / |
| -7 | 5.35 | 1.53 | 3.50 | 4.94 | 1.55 | 3.18 | 4.97 | 1.68 | 2.96 | 5.55 | 1.99 | 2.79 | 6.80 | 2.86 | 2.38 | 6.91 | 3.17 | 2.18 | 7.07 | 3.27 | 2.16 | 5.33 | 3.80 | 1.40 | / | / | / |
| -5 | 5.57 | 1.43 | 3.90 | 5.13 | 1.47 | 3.49 | 5.14 | 1.62 | 3.18 | 5.69 | 1.94 | 2.93 | 7.05 | 2.84 | 2.48 | 7.08 | 3.29 | 2.15 | 7.27 | 3.20 | 2.27 | 5.66 | 3.72 | 1.52 | / | / | / |
| 0 | 6.01 | 1.22 | 4.93 | 5.69 | 1.35 | 4.22 | 5.46 | 1.46 | 3.74 | 5.90 | 1.81 | 3.26 | 7.62 | 2.62 | 2.91 | 7.54 | 2.91 | 2.59 | 7.48 | 2.91 | 2.57 | 6.29 | 3.43 | 1.83 | / | / | / |
| 5 | 6.77 | 1.13 | 5.99 | 5.75 | 1.25 | 4.60 | 6.24 | 1.36 | 4.59 | 6.74 | 1.71 | 3.94 | 8.70 | 2.43 | 3.58 | 8.66 | 2.82 | 3.07 | 9.06 | 3.00 | 3.02 | 8.61 | 3.36 | 2.56 | 7.51 | 3.51 | 2.14 |
| 7 | 6.93 | 1.08 | 6.41 | 5.64 | 1.05 | 5.37 | 6.40 | 1.27 | 5.04 | 6.94 | 1.56 | 4.45 | 8.97 | 2.26 | 3.97 | 8.96 | 2.58 | 3.47 | 9.91 | 3.13 | 3.17 | 9.41 | 3.29 | 2.86 | 7.83 | 3.41 | 2.30 |
| 10 | 7.31 | 1.05 | 6.97 | 6.48 | 1.14 | 5.68 | 6.88 | 1.27 | 5.41 | 7.40 | 1.62 | 4.57 | 9.53 | 2.31 | 4.13 | 9.51 | 2.66 | 3.58 | 10.15 | 2.99 | 3.39 | 9.73 | 3.24 | 3.00 | 8.62 | 3.38 | 2.55 |
| 15 | 7.36 | 0.93 | 7.92 | 7.53 | 1.05 | 7.17 | 7.35 | 1.18 | 6.23 | 8.41 | 1.62 | 5.19 | 10.25 | 2.21 | 4.64 | 10.95 | 2.67 | 4.10 | 11.34 | 3.02 | 3.76 | 10.45 | 3.16 | 3.31 | 9.12 | 3.37 | 2.71 |
| 20 | 6.64 | 0.70 | 9.48 | 6.73 | 0.82 | 8.20 | 6.62 | 0.92 | 7.19 | 8.13 | 1.36 | 5.98 | 8.99 | 1.85 | 4.86 | 9.07 | 2.26 | 4.02 | 9.77 | 2.57 | 3.80 | 9.37 | 2.87 | 3.27 | / | / | / |
| 25 | 6.59 | 0.63 | 10.46 | 6.61 | 0.79 | 8.36 | 6.51 | 0.81 | 8.03 | 7.95 | 1.17 | 6.79 | 8.94 | 1.61 | 5.55 | 9.15 | 1.96 | 4.67 | 9.33 | 2.22 | 4.20 | 8.99 | 2.69 | 3.34 | / | / | / |
| 30 | 7.25 | 0.62 | 11.70 | 7.54 | 0.80 | 9.43 | 8.34 | 0.96 | 8.69 | 8.87 | 1.21 | 7.33 | 8.84 | 1.47 | 6.01 | 9.20 | 1.74 | 5.29 | 8.91 | 1.95 | 4.57 | 9.00 | 2.66 | 3.39 | / | / | / |
| 35 | 7.71 | 0.61 | 12.64 | 8.24 | 0.79 | 10.43 | 9.00 | 0.94 | 9.58 | 9.43 | 1.21 | 7.80 | 9.29 | 1.48 | 6.28 | 9.72 | 1.74 | 5.59 | 9.18 | 1.92 | 4.78 | / | / | / | / | / | / |
| 40 | 8.18 | 0.61 | 13.41 | 8.96 | 0.76 | 11.78 | 9.70 | 0.93 | 10.43 | 9.84 | 1.19 | 8.27 | 9.63 | 1.46 | 6.60 | 10.25 | 1.75 | 5.86 | / | / | / | / | / | / | / | / | / |
| 43 | 8.60 | 0.61 | 14.09 | 9.40 | 0.76 | 12.37 | 10.15 | 0.94 | 10.80 | 10.35 | 1.21 | 8.55 | 10.15 | 1.46 | 6.95 | 10.65 | 1.75 | 6.08 | / | / | / | / | / | / | / | / | / |

*Abbreviazioni:*

*LWT: Temperatura dell'acqua in uscita (°C )*

*DB: Temperatura a bulbo secco perla temperatura dell'aria esterna (°C )*

*HC: Capacità di riscaldamento totale (kW)*

*PI: Potenza in ingresso (kW)*

## 5.2 tabelle per la capacità di raffrescamento (Norma di prova: EN14511)

*Tabella 2-5.6: Capacità di raffrescamento per THMLd-8D/HBp-A*

| DB | LWT | | | | | | | | | | | | | | | |
|---|---|---|---|---|---|---|---|---|---|---|---|---|---|---|---|---|
| | | 5 | | | 10 | | | 15 | | | 20 | | | 25 | | |
| | Livello CC | CC | PI | EER | CC | PI | EER | CC | PI | EER | CC | PI | EER | CC | PI | EER |
| -5 | max | / | / | / | / | / | / | 6.26 | 0.65 | 9.67 | 8.05 | 0.78 | 10.38 | 8.57 | 0.72 | 11.83 |
| | norm | / | / | / | / | / | / | 5.04 | 0.46 | 10.89 | 6.55 | 0.54 | 12.11 | 6.96 | 0.52 | 13.38 |
| | min | / | / | / | / | / | / | 3.26 | 0.29 | 11.34 | 4.22 | 0.34 | 12.55 | 4.51 | 0.32 | 14.26 |
| 0 | max | / | / | / | / | / | / | 6.05 | 0.73 | 8.28 | 7.11 | 0.75 | 9.43 | 7.60 | 0.71 | 10.65 |
| | norm | / | / | / | / | / | / | 4.88 | 0.51 | 9.49 | 5.79 | 0.53 | 10.92 | 6.18 | 0.50 | 12.37 |
| | min | / | / | / | / | / | / | 3.17 | 0.32 | 9.93 | 3.75 | 0.33 | 11.50 | 4.03 | 0.32 | 12.74 |
| 5 | max | / | / | / | / | / | / | 5.84 | 0.84 | 6.93 | 6.17 | 0.73 | 8.41 | 6.64 | 0.70 | 9.44 |
| | norm | / | / | / | / | / | / | 4.67 | 0.62 | 7.58 | 4.95 | 0.53 | 9.33 | 5.39 | 0.52 | 10.36 |
| | min | / | / | / | / | / | / | 2.52 | 0.31 | 8.17 | 2.69 | 0.28 | 9.75 | 2.90 | 0.27 | 10.94 |
| 10 | max | / | / | / | / | / | / | 6.16 | 0.76 | 8.10 | 7.75 | 0.86 | 9.05 | 8.13 | 0.81 | 10.09 |
| | norm | / | / | / | / | / | / | 4.95 | 0.56 | 8.92 | 6.24 | 0.61 | 10.20 | 6.62 | 0.59 | 11.18 |
| | min | / | / | / | / | / | / | 2.74 | 0.29 | 9.53 | 3.49 | 0.32 | 11.03 | 3.68 | 0.31 | 12.01 |
| 15 | max | / | / | / | 5.85 | 0.89 | 6.59 | 7.18 | 1.02 | 7.06 | 8.93 | 1.17 | 7.61 | 9.54 | 1.14 | 8.35 |
| | norm | / | / | / | 4.39 | 0.63 | 6.94 | 6.04 | 0.81 | 7.43 | 7.67 | 0.92 | 8.36 | 8.01 | 0.88 | 9.13 |
| | min | / | / | / | 2.70 | 0.37 | 7.34 | 3.23 | 0.40 | 8.07 | 3.84 | 0.42 | 9.19 | 4.58 | 0.45 | 10.20 |
| 20 | max | 5.57 | 1.17 | 4.75 | 6.92 | 1.32 | 5.26 | 8.21 | 1.39 | 5.92 | 10.10 | 1.63 | 6.19 | 10.93 | 1.67 | 6.53 |
| | norm | 4.34 | 0.87 | 5.01 | 5.60 | 0.99 | 5.66 | 6.85 | 1.07 | 6.41 | 8.69 | 1.31 | 6.66 | 9.52 | 1.32 | 7.23 |
| | min | 2.20 | 0.42 | 5.25 | 2.45 | 0.42 | 5.86 | 3.40 | 0.50 | 6.75 | 4.78 | 0.68 | 7.00 | 5.40 | 0.70 | 7.67 |
| 25 | max | 6.34 | 1.51 | 4.20 | 7.66 | 1.66 | 4.61 | 9.07 | 1.73 | 5.25 | 11.03 | 1.94 | 5.69 | 12.50 | 2.06 | 6.07 |
| | norm | 5.03 | 1.13 | 4.44 | 6.29 | 1.26 | 4.97 | 7.68 | 1.37 | 5.62 | 9.62 | 1.55 | 6.21 | 11.03 | 1.62 | 6.80 |
| | min | 2.41 | 0.53 | 4.55 | 2.61 | 0.50 | 5.22 | 3.64 | 0.62 | 5.89 | 5.08 | 0.78 | 6.55 | 6.00 | 0.84 | 7.17 |
| 30 | max | 7.12 | 1.93 | 3.70 | 8.40 | 2.05 | 4.10 | 9.95 | 2.12 | 4.70 | 11.96 | 2.24 | 5.33 | 14.07 | 2.45 | 5.75 |
| | norm | 5.72 | 1.45 | 3.95 | 7.00 | 1.60 | 4.37 | 8.54 | 1.70 | 5.03 | 10.58 | 1.86 | 5.70 | 12.60 | 1.99 | 6.34 |
| | min | 2.72 | 0.67 | 4.05 | 2.87 | 0.63 | 4.54 | 4.00 | 0.76 | 5.26 | 5.53 | 0.92 | 6.02 | 6.78 | 1.03 | 6.58 |
| 35 | max | 7.24 | 2.30 | 3.16 | 8.59 | 2.36 | 3.65 | 10.01 | 2.37 | 4.21 | 11.51 | 2.45 | 4.70 | 13.32 | 2.55 | 5.22 |
| | norm | 5.64 | 1.70 | 3.31 | 7.06 | 1.80 | 3.93 | 8.25 | 1.81 | 4.56 | 10.05 | 1.99 | 5.05 | 12.14 | 2.13 | 5.70 |
| | min | 2.57 | 0.75 | 3.40 | 3.27 | 0.80 | 4.11 | 4.13 | 0.84 | 4.89 | 5.35 | 0.98 | 5.46 | 6.68 | 1.09 | 6.12 |
| 40 | max | 6.48 | 2.57 | 2.52 | 7.27 | 2.42 | 3.01 | 8.70 | 2.60 | 3.35 | 10.03 | 2.56 | 3.92 | 12.02 | 2.89 | 4.17 |
| | norm | 5.29 | 1.96 | 2.70 | 6.14 | 1.90 | 3.24 | 7.58 | 2.10 | 3.61 | 9.00 | 2.10 | 4.28 | 10.92 | 2.33 | 4.69 |
| | min | 2.39 | 0.89 | 2.69 | 2.88 | 0.86 | 3.36 | 3.71 | 1.00 | 3.72 | 4.81 | 1.08 | 4.45 | 6.21 | 1.31 | 4.76 |
| 43 | max | 4.99 | 2.33 | 2.14 | 5.53 | 2.23 | 2.47 | 6.60 | 2.19 | 3.01 | 7.99 | 2.21 | 3.61 | 9.84 | 2.54 | 3.87 |
| | norm | 4.10 | 1.84 | 2.23 | 4.35 | 1.69 | 2.57 | 5.25 | 1.66 | 3.17 | 6.84 | 1.75 | 3.90 | 7.78 | 1.84 | 4.24 |
| | min | 1.40 | 0.61 | 2.29 | 2.08 | 0.79 | 2.65 | 2.74 | 0.83 | 3.30 | 3.48 | 0.87 | 4.01 | 4.96 | 1.13 | 4.38 |

*Abbreviazioni:*

*LWT: Temperatura dell'acqua in uscita (°C )*

*DB: Temperatura a bulbo secco perla temperatura dell'aria esterna (°C )*

*CC: Capacità di raffrescamento totale (kW)*

*PI: Potenza in ingresso (kW)*

*Tabella 2-5.7: Capacità di raffrescamento per THMLd-10D/HBp-A*

| DB | LWT | | | | | | | | | | | | | | | |
|---|---|---|---|---|---|---|---|---|---|---|---|---|---|---|---|---|
| | | 5 | | | 10 | | | 15 | | | 20 | | | 25 | | |
| | Livello CC | CC | PI | EER | CC | PI | EER | CC | PI | EER | CC | PI | EER | CC | PI | EER |
| -5 | max | / | / | / | / | / | / | 6.86 | 0.72 | 9.47 | 8.61 | 0.84 | 10.30 | 9.16 | 0.79 | 11.67 |
| | norm | / | / | / | / | / | / | 5.53 | 0.51 | 10.74 | 7.01 | 0.59 | 11.84 | 7.44 | 0.56 | 13.26 |
| | min | / | / | / | / | / | / | 3.58 | 0.32 | 11.36 | 4.52 | 0.37 | 12.30 | 4.83 | 0.35 | 13.93 |
| 0 | max | / | / | / | / | / | / | 6.64 | 0.81 | 8.22 | 7.60 | 0.83 | 9.20 | 8.13 | 0.78 | 10.49 |
| | norm | / | / | / | / | / | / | 5.36 | 0.57 | 9.45 | 6.20 | 0.58 | 10.67 | 6.62 | 0.54 | 12.24 |
| | min | / | / | / | / | / | / | 3.48 | 0.36 | 9.74 | 4.01 | 0.36 | 11.23 | 4.30 | 0.34 | 12.78 |
| 5 | max | / | / | / | / | / | / | 6.41 | 0.93 | 6.86 | 6.61 | 0.81 | 8.20 | 7.11 | 0.77 | 9.29 |
| | norm | / | / | / | / | / | / | 5.14 | 0.68 | 7.52 | 5.30 | 0.58 | 9.12 | 5.76 | 0.57 | 10.09 |
| | min | / | / | / | / | / | / | 2.76 | 0.35 | 7.98 | 2.87 | 0.30 | 9.71 | 3.11 | 0.29 | 10.88 |
| 10 | max | / | / | / | / | / | / | 6.58 | 0.79 | 8.36 | 8.01 | 0.82 | 9.81 | 8.62 | 0.88 | 9.83 |
| | norm | / | / | / | / | / | / | 5.29 | 0.58 | 9.15 | 6.45 | 0.59 | 10.90 | 7.02 | 0.65 | 10.75 |
| | min | / | / | / | / | / | / | 2.93 | 0.29 | 9.98 | 3.60 | 0.31 | 11.75 | 3.89 | 0.34 | 11.56 |
| 15 | max | / | / | / | 6.49 | 1.16 | 5.62 | 7.65 | 1.08 | 7.07 | 9.29 | 1.15 | 8.06 | 10.43 | 1.22 | 8.52 |
| | norm | / | / | / | 4.87 | 0.82 | 5.94 | 6.42 | 0.86 | 7.46 | 7.99 | 0.91 | 8.80 | 8.76 | 0.94 | 9.34 |
| | min | / | / | / | 2.99 | 0.48 | 6.29 | 3.44 | 0.43 | 7.98 | 4.00 | 0.41 | 9.80 | 5.01 | 0.48 | 10.45 |
| 20 | max | 6.32 | 1.36 | 4.66 | 7.41 | 1.50 | 4.93 | 8.71 | 1.52 | 5.72 | 10.57 | 1.67 | 6.32 | 12.24 | 1.71 | 7.14 |
| | norm | 4.93 | 1.01 | 4.89 | 5.99 | 1.13 | 5.29 | 7.27 | 1.19 | 6.12 | 9.10 | 1.34 | 6.81 | 10.65 | 1.35 | 7.91 |
| | min | 2.49 | 0.49 | 5.10 | 2.63 | 0.48 | 5.53 | 3.61 | 0.56 | 6.48 | 5.01 | 0.69 | 7.22 | 6.05 | 0.72 | 8.35 |
| 25 | max | 7.27 | 1.78 | 4.08 | 8.51 | 1.95 | 4.35 | 9.92 | 1.97 | 5.03 | 11.76 | 2.11 | 5.57 | 13.65 | 2.21 | 6.17 |
| | norm | 5.76 | 1.34 | 4.31 | 6.98 | 1.49 | 4.69 | 8.39 | 1.58 | 5.33 | 10.26 | 1.69 | 6.06 | 12.05 | 1.74 | 6.91 |
| | min | 2.76 | 0.63 | 4.42 | 2.89 | 0.59 | 4.87 | 3.97 | 0.70 | 5.64 | 5.41 | 0.85 | 6.39 | 6.56 | 0.91 | 7.22 |
| 30 | max | 8.22 | 2.30 | 3.57 | 9.62 | 2.49 | 3.86 | 11.14 | 2.52 | 4.42 | 12.95 | 2.62 | 4.94 | 15.06 | 2.85 | 5.29 |
| | norm | 6.61 | 1.74 | 3.80 | 8.01 | 1.94 | 4.12 | 9.56 | 2.02 | 4.74 | 11.46 | 2.16 | 5.30 | 13.48 | 2.31 | 5.85 |
| | min | 3.14 | 0.81 | 3.90 | 3.29 | 0.76 | 4.35 | 4.47 | 0.90 | 4.95 | 5.98 | 1.07 | 5.58 | 7.26 | 1.20 | 6.03 |
| 35 | max | 8.29 | 2.63 | 3.15 | 9.76 | 2.62 | 3.72 | 11.09 | 2.75 | 4.03 | 12.45 | 2.73 | 4.55 | 14.22 | 2.93 | 4.86 |
| | norm | 6.44 | 2.05 | 3.15 | 8.01 | 2.10 | 3.82 | 9.14 | 2.11 | 4.33 | 10.86 | 2.22 | 4.88 | 12.97 | 2.44 | 5.32 |
| | min | 2.94 | 0.90 | 3.26 | 3.72 | 0.93 | 4.00 | 4.57 | 0.99 | 4.63 | 5.78 | 1.09 | 5.30 | 7.13 | 1.25 | 5.69 |
| 40 | max | 6.74 | 2.67 | 2.52 | 7.64 | 2.56 | 2.99 | 8.92 | 2.66 | 3.36 | 10.03 | 2.56 | 3.92 | 12.02 | 2.89 | 4.17 |
| | norm | 5.51 | 2.04 | 2.71 | 6.46 | 2.01 | 3.21 | 7.77 | 2.14 | 3.63 | 9.00 | 2.10 | 4.28 | 10.92 | 2.33 | 4.69 |
| | min | 2.49 | 0.92 | 2.70 | 3.03 | 0.91 | 3.34 | 3.81 | 1.02 | 3.74 | 4.81 | 1.08 | 4.45 | 6.21 | 1.31 | 4.76 |
| 43 | max | 5.19 | 2.42 | 2.15 | 5.81 | 2.37 | 2.46 | 6.76 | 2.24 | 3.02 | 7.99 | 2.21 | 3.61 | 9.84 | 2.54 | 3.87 |
| | norm | 4.26 | 1.91 | 2.23 | 4.57 | 1.79 | 2.55 | 5.39 | 1.69 | 3.19 | 6.84 | 1.75 | 3.90 | 7.78 | 1.84 | 4.24 |
| | min | 1.46 | 0.64 | 2.29 | 2.18 | 0.83 | 2.63 | 2.81 | 0.85 | 3.31 | 3.48 | 0.87 | 4.01 | 4.96 | 1.13 | 4.38 |

*Abbreviazioni:*

*LWT: Temperatura dell'acqua in uscita (°C )*

*DB: Temperatura a bulbo secco perla temperatura dell'aria esterna (°C )*

*CC: Capacità di raffrescamento totale (kW)*

*PI: Potenza in ingresso (kW)*

*Tabella 2-5.8: Capacità di raffrescamento per THMLd-12D(S)/HBp-A*

| Massimo | | | | | | | | | | | | | | | |
|---|---|---|---|---|---|---|---|---|---|---|---|---|---|---|---|
| DB | LWT | | | | | | | | | | | | | | |
| | 5 | | | 10 | | | 15 | | | 20 | | | 25 | | |
| | CC | PI | EER | CC | PI | EER | CC | PI | EER | CC | PI | EER | CC | PI | EER |
| -5 | / | / | / | / | / | / | 9.60 | 1.28 | 7.50 | 10.44 | 1.42 | 7.37 | 11.45 | 1.37 | 8.35 |
| 0 | / | / | / | / | / | / | 9.38 | 1.58 | 5.93 | 10.95 | 1.50 | 7.32 | 11.95 | 1.51 | 7.92 |
| 5 | / | / | / | / | / | / | 9.17 | 1.72 | 5.32 | 11.47 | 1.58 | 7.27 | 12.44 | 1.65 | 7.57 |
| 10 | / | / | / | / | / | / | 10.86 | 2.06 | 5.27 | 13.21 | 1.93 | 6.85 | 14.25 | 1.95 | 7.32 |
| 15 | / | / | / | 10.56 | 2.33 | 4.53 | 12.56 | 2.34 | 5.36 | 14.94 | 2.28 | 6.56 | 16.06 | 2.25 | 7.14 |
| 20 | 7.82 | 2.04 | 3.83 | 12.21 | 2.97 | 4.10 | 14.23 | 3.14 | 4.54 | 16.01 | 3.16 | 5.08 | 16.61 | 2.85 | 5.82 |
| 25 | 10.15 | 3.02 | 3.37 | 13.87 | 3.63 | 3.82 | 15.90 | 3.93 | 4.04 | 17.09 | 4.03 | 4.24 | 17.16 | 3.46 | 4.96 |
| 30 | 10.04 | 3.60 | 2.79 | 13.50 | 4.15 | 3.25 | 15.26 | 4.19 | 3.64 | 16.25 | 4.17 | 3.90 | 16.19 | 3.76 | 4.31 |
| 35 | 9.94 | 4.54 | 2.19 | 13.14 | 4.92 | 2.67 | 14.60 | 4.58 | 3.19 | 15.42 | 4.40 | 3.51 | 15.34 | 4.02 | 3.81 |
| 40 | 8.15 | 4.55 | 1.79 | 9.92 | 4.35 | 2.28 | 10.72 | 3.94 | 2.72 | 12.25 | 4.07 | 3.01 | 13.30 | 3.79 | 3.51 |
| 43 | 5.23 | 3.74 | 1.40 | 6.14 | 3.28 | 1.87 | 7.37 | 3.04 | 2.43 | 8.57 | 3.21 | 2.67 | 10.73 | 3.28 | 3.27 |
| Normale | | | | | | | | | | | | | | | |
| DB | LWT | | | | | | | | | | | | | | |
| | 5 | | | 10 | | | 15 | | | 20 | | | 25 | | |
| | CC | PI | EER | CC | PI | EER | CC | PI | EER | CC | PI | EER | CC | PI | EER |
| -5 | / | / | / | / | / | / | 7.73 | 0.91 | 8.47 | 8.50 | 0.99 | 8.51 | 9.30 | 0.97 | 9.52 |
| 0 | / | / | / | / | / | / | 7.57 | 1.12 | 6.78 | 8.93 | 1.06 | 8.48 | 9.72 | 1.06 | 9.22 |
| 5 | / | / | / | / | / | / | 7.34 | 1.27 | 5.80 | 9.21 | 1.14 | 8.10 | 10.10 | 1.22 | 8.32 |
| 10 | / | / | / | / | / | / | 8.72 | 1.52 | 5.75 | 10.62 | 1.39 | 7.65 | 11.60 | 1.44 | 8.07 |
| 15 | / | / | / | 7.92 | 1.63 | 4.86 | 10.55 | 1.81 | 5.82 | 12.84 | 1.75 | 7.36 | 13.50 | 1.68 | 8.05 |
| 20 | 6.10 | 1.52 | 4.02 | 9.88 | 2.21 | 4.46 | 11.87 | 2.37 | 4.99 | 13.78 | 2.45 | 5.61 | 14.46 | 2.20 | 6.56 |
| 25 | 8.04 | 2.25 | 3.56 | 11.39 | 2.72 | 4.17 | 13.46 | 3.06 | 4.41 | 14.91 | 3.16 | 4.73 | 15.15 | 2.66 | 5.68 |
| 30 | 8.08 | 2.72 | 2.97 | 11.25 | 3.20 | 3.52 | 13.10 | 3.29 | 3.99 | 14.38 | 3.36 | 4.28 | 14.50 | 2.98 | 4.86 |
| 35 | 7.72 | 3.36 | 2.30 | 10.78 | 3.71 | 2.91 | 12.03 | 3.43 | 3.51 | 13.46 | 3.49 | 3.86 | 13.98 | 3.28 | 4.27 |
| 40 | 6.65 | 3.47 | 1.92 | 8.39 | 3.37 | 2.49 | 9.33 | 3.11 | 3.00 | 10.99 | 3.26 | 3.38 | 12.06 | 2.98 | 4.05 |
| 43 | 4.29 | 2.94 | 1.45 | 4.82 | 2.45 | 1.97 | 5.86 | 2.24 | 2.61 | 7.34 | 2.48 | 2.96 | 8.48 | 2.31 | 3.66 |
| Minimo | | | | | | | | | | | | | | | |
| DB | LWT | | | | | | | | | | | | | | |
| | 5 | | | 10 | | | 15 | | | 20 | | | 25 | | |
| | CC | PI | EER | CC | PI | EER | CC | PI | EER | CC | PI | EER | CC | PI | EER |
| -5 | / | / | / | / | / | / | 5.00 | 0.56 | 8.83 | 5.49 | 0.62 | 8.78 | 6.03 | 0.60 | 9.98 |
| 0 | / | / | / | / | / | / | 4.90 | 0.69 | 7.09 | 5.78 | 0.65 | 8.84 | 6.32 | 0.66 | 9.56 |
| 5 | / | / | / | / | / | / | 3.95 | 0.63 | 6.23 | 4.98 | 0.58 | 8.61 | 5.44 | 0.60 | 8.95 |
| 10 | / | / | / | / | / | / | 4.83 | 0.77 | 6.24 | 5.94 | 0.72 | 8.20 | 6.43 | 0.73 | 8.75 |
| 15 | / | / | / | 4.85 | 0.94 | 5.16 | 5.66 | 0.91 | 6.22 | 6.42 | 0.79 | 8.11 | 7.71 | 0.86 | 8.92 |
| 20 | 3.09 | 0.73 | 4.18 | 4.32 | 0.92 | 4.65 | 5.89 | 1.12 | 5.29 | 7.59 | 1.29 | 5.92 | 8.20 | 1.19 | 6.93 |
| 25 | 3.86 | 1.06 | 3.65 | 4.71 | 1.08 | 4.38 | 6.36 | 1.37 | 4.64 | 7.86 | 1.59 | 4.96 | 8.23 | 1.39 | 5.95 |
| 30 | 3.84 | 1.27 | 3.03 | 4.61 | 1.26 | 3.68 | 6.13 | 1.47 | 4.17 | 7.51 | 1.66 | 4.51 | 7.81 | 1.55 | 5.04 |
| 35 | 3.52 | 1.49 | 2.36 | 5.00 | 1.65 | 3.04 | 6.02 | 1.60 | 3.76 | 7.17 | 1.72 | 4.18 | 7.70 | 1.69 | 4.56 |
| 40 | 3.00 | 1.57 | 1.91 | 3.93 | 1.54 | 2.56 | 4.57 | 1.47 | 3.11 | 5.88 | 1.68 | 3.50 | 6.86 | 1.67 | 4.12 |
| 43 | 1.47 | 0.98 | 1.48 | 2.31 | 1.14 | 2.03 | 3.07 | 1.13 | 2.72 | 3.74 | 1.23 | 3.04 | 5.41 | 1.43 | 3.80 |

*Abbreviazioni:*

*LWT: Temperatura dell'acqua in uscita (°C )*

*DB: Temperatura a bulbo secco perla temperatura dell'aria esterna (°C )*

*CC: Capacità di raffrescamento totale (kW)*

*PI: Potenza in ingresso (kW)*

*Tabella 2-5.9: Capacitò di raffrescamento* per *THMLd-14D(S)/HBp-A*

| **Massimo** | | | | | | | | | | | | | | | |
|---|---|---|---|---|---|---|---|---|---|---|---|---|---|---|---|
| **DB** | **LWT** | | | | | | | | | | | | | | |
| | **5** | | | **10** | | | **15** | | | **20** | | | **25** | | |
| | **CC** | **PI** | **EER** | **CC** | **PI** | **EER** | **CC** | **PI** | **EER** | **CC** | **PI** | **EER** | **CC** | **PI** | **EER** |
| -5 | / | / | / | / | / | / | 10.1 | 1.33 | 7.57 | 11.0 | 1.48 | 7.44 | 12.1 | 1.43 | 8.43 |
| 0 | / | / | / | / | / | / | 9.85 | 1.68 | 5.87 | 11.5 | 1.59 | 7.24 | 12.6 | 1.60 | 7.84 |
| 5 | / | / | / | / | / | / | 9.62 | 1.77 | 5.44 | 12.1 | 1.62 | 7.43 | 13.1 | 1.69 | 7.73 |
| 10 | / | / | / | / | / | / | 11.4 | 2.19 | 5.21 | 13.2 | 1.93 | 6.85 | 14.3 | 1.95 | 7.32 |
| 15 | / | / | / | 11.1 | 2.33 | 4.60 | 13.2 | 2.33 | 5.45 | 15.6 | 2.33 | 6.67 | 16.5 | 2.33 | 7.26 |
| 20 | 8.21 | 2.18 | 3.77 | 12.9 | 3.18 | 4.04 | 15.0 | 3.35 | 4.47 | 16.0 | 3.16 | 5.08 | 16.6 | 2.85 | 5.82 |
| 25 | 10.7 | 3.21 | 3.32 | 14.6 | 3.86 | 3.77 | 16.7 | 4.18 | 3.99 | 17.1 | 4.03 | 4.24 | 17.2 | 3.46 | 4.96 |
| 30 | 10.6 | 3.98 | 2.65 | 14.2 | 4.55 | 3.11 | 16.0 | 4.58 | 3.49 | 16.3 | 4.20 | 3.87 | 16.2 | 3.76 | 4.31 |
| 35 | 10.5 | 4.83 | 2.16 | 13.8 | 5.35 | 2.58 | 15.4 | 4.90 | 3.13 | 15.4 | 4.46 | 3.45 | 15.4 | 4.14 | 3.71 |
| 40 | 8.15 | 4.55 | 1.79 | 9.92 | 4.35 | 2.28 | 10.8 | 3.94 | 2.72 | 12.3 | 4.07 | 3.01 | 13.3 | 3.79 | 3.51 |
| 43 | 5.23 | 3.74 | 1.40 | 6.14 | 3.28 | 1.87 | 7.37 | 3.04 | 2.43 | 8.57 | 3.21 | 2.67 | 10.8 | 3.28 | 3.27 |
| **Normale** | | | | | | | | | | | | | | | |
| **DB** | **LWT** | | | | | | | | | | | | | | |
| | **5** | | | **10** | | | **15** | | | **20** | | | **25** | | |
| | **CC** | **PI** | **EER** | **CC** | **PI** | **EER** | **CC** | **PI** | **EER** | **CC** | **PI** | **EER** | **CC** | **PI** | **EER** |
| -5 | / | / | / | / | / | / | 8.11 | 0.94 | 8.56 | 8.92 | 1.04 | 8.60 | 9.77 | 1.02 | 9.61 |
| 0 | / | / | / | / | / | / | 7.94 | 1.19 | 6.71 | 9.38 | 1.12 | 8.39 | 10.3 | 1.12 | 9.13 |
| 5 | / | / | / | / | / | / | 7.71 | 1.30 | 5.93 | 9.66 | 1.17 | 8.28 | 10.7 | 1.25 | 8.50 |
| 10 | / | / | / | / | / | / | 9.17 | 1.61 | 5.69 | 10.7 | 1.39 | 7.65 | 11.6 | 1.44 | 8.07 |
| 15 | / | / | / | 8.28 | 1.68 | 4.94 | 11.1 | 1.86 | 5.92 | 13.5 | 1.80 | 7.48 | 13.9 | 1.69 | 8.19 |
| 20 | 6.40 | 1.62 | 3.96 | 10.4 | 2.36 | 4.40 | 12.5 | 2.53 | 4.92 | 13.8 | 2.45 | 5.61 | 14.5 | 2.20 | 6.56 |
| 25 | 8.44 | 2.40 | 3.52 | 12.0 | 2.90 | 4.12 | 14.2 | 3.25 | 4.35 | 14.9 | 3.16 | 4.73 | 15.2 | 2.66 | 5.68 |
| 30 | 8.48 | 3.01 | 2.82 | 11.9 | 3.51 | 3.37 | 13.8 | 3.59 | 3.83 | 14.4 | 3.39 | 4.25 | 14.5 | 2.98 | 4.86 |
| 35 | 8.11 | 3.58 | 2.27 | 11.4 | 4.02 | 2.81 | 12.7 | 3.67 | 3.45 | 13.5 | 3.54 | 3.80 | 14.0 | 3.37 | 4.15 |
| 40 | 6.65 | 3.47 | 1.92 | 8.39 | 3.37 | 2.49 | 9.33 | 3.11 | 3.00 | 11.0 | 3.26 | 3.38 | 12.1 | 2.98 | 4.05 |
| 43 | 4.29 | 2.94 | 1.45 | 4.82 | 2.45 | 1.97 | 5.86 | 2.24 | 2.61 | 7.34 | 2.48 | 2.96 | 8.48 | 2.31 | 3.66 |
| **Minimo** | | | | | | | | | | | | | | | |
| **DB** | **LWT** | | | | | | | | | | | | | | |
| | **5** | | | **10** | | | **15** | | | **20** | | | **25** | | |
| | **CC** | **PI** | **EER** | **CC** | **PI** | **EER** | **CC** | **PI** | **EER** | **CC** | **PI** | **EER** | **CC** | **PI** | **EER** |
| -5 | / | / | / | / | / | / | 5.25 | 0.59 | 8.92 | 5.76 | 0.65 | 8.86 | 6.33 | 0.63 | 10.08 |
| 0 | / | / | / | / | / | / | 5.16 | 0.73 | 7.01 | 6.07 | 0.69 | 8.75 | 6.64 | 0.70 | 9.47 |
| 5 | / | / | / | / | / | / | 4.14 | 0.65 | 6.37 | 5.24 | 0.59 | 8.80 | 5.71 | 0.62 | 9.15 |
| 10 | / | / | / | / | / | / | 5.09 | 0.82 | 6.16 | 5.94 | 0.72 | 8.20 | 6.43 | 0.73 | 8.75 |

| | | | | | | | | | | | | | | | |
|---|---|---|---|---|---|---|---|---|---|---|---|---|---|---|---|
| 15 | / | / | / | 5.08 | 0.96 | 5.24 | 5.91 | 0.93 | 6.32 | 6.71 | 0.81 | 8.25 | 7.90 | 0.87 | 9.07 |
| 20 | 3.24 | 0.78 | 4.12 | 4.54 | 0.99 | 4.58 | 6.19 | 1.19 | 5.21 | 7.59 | 1.29 | 5.92 | 8.20 | 1.19 | 6.93 |
| 25 | 4.05 | 1.13 | 3.60 | 4.95 | 1.15 | 4.32 | 6.68 | 1.46 | 4.58 | 7.86 | 1.59 | 4.96 | 8.23 | 1.39 | 5.95 |
| 30 | 4.03 | 1.40 | 2.88 | 4.84 | 1.38 | 3.53 | 6.44 | 1.61 | 4.01 | 7.51 | 1.68 | 4.48 | 7.81 | 1.55 | 5.04 |
| 35 | 3.69 | 1.59 | 2.33 | 5.26 | 1.79 | 2.94 | 6.32 | 1.71 | 3.69 | 7.17 | 1.74 | 4.11 | 7.70 | 1.74 | 4.44 |
| 40 | 3.00 | 1.57 | 1.91 | 3.93 | 1.54 | 2.56 | 4.57 | 1.47 | 3.11 | 5.88 | 1.68 | 3.50 | 6.86 | 1.67 | 4.12 |
| 43 | 1.47 | 0.98 | 1.48 | 2.31 | 1.14 | 2.03 | 3.07 | 1.13 | 2.72 | 3.74 | 1.23 | 3.04 | 5.41 | 1.43 | 3.80 |

*Abbreviazioni:*

*LWT: Temperatura dell'acqua in uscita (°C )*

*DB: Temperatura a bulbo secco perla temperatura dell'aria esterna (°C )*

*CC: Capacità di raffrescamento totale (kW)*

*PI: Potenza in ingresso (kW)*

*Tabella 2-5.9: Capacitò di raffrescamento* per *THMLd-16D(S)/HBp-A*

| **Massimo** | | | | | | | | | | | | | | | |
|---|---|---|---|---|---|---|---|---|---|---|---|---|---|---|---|
| **DB** | **LWT** | | | | | | | | | | | | | | |
| | **5** | | | **10** | | | **15** | | | **20** | | | **25** | | |
| | **CC** | **PI** | **EER** | **CC** | **PI** | **EER** | **CC** | **PI** | **EER** | **CC** | **PI** | **EER** | **CC** | **PI** | **EER** |
| -5 | / | / | / | / | / | / | 10.1 | 1.33 | 7.57 | 11.0 | 1.48 | 7.44 | 12.1 | 1.43 | 8.43 |
| 0 | / | / | / | / | / | / | 9.85 | 1.68 | 5.87 | 11.5 | 1.59 | 7.24 | 12.6 | 1.60 | 7.84 |
| 5 | / | / | / | / | / | / | 9.62 | 1.77 | 5.44 | 12.1 | 1.62 | 7.43 | 13.1 | 1.69 | 7.73 |
| 10 | / | / | / | / | / | / | 11.4 | 2.19 | 5.21 | 13.2 | 1.93 | 6.85 | 14.3 | 1.95 | 7.32 |
| 15 | / | / | / | 11.5 | 2.44 | 4.67 | 13.6 | 2.45 | 5.53 | 16.2 | 2.38 | 6.77 | 17.1 | 2.31 | 7.37 |
| 20 | 9.03 | 2.44 | 3.70 | 14.1 | 3.57 | 3.96 | 15.9 | 3.58 | 4.42 | 17.0 | 3.38 | 5.03 | 17.6 | 3.06 | 5.76 |
| 25 | 11.8 | 3.61 | 3.25 | 16.0 | 4.34 | 3.69 | 17.5 | 4.49 | 3.90 | 18.0 | 4.33 | 4.14 | 18.0 | 3.72 | 4.84 |
| 30 | 11.6 | 4.48 | 2.59 | 15.6 | 5.14 | 3.04 | 17.3 | 5.08 | 3.41 | 17.2 | 4.68 | 3.68 | 17.0 | 4.04 | 4.21 |
| 35 | 11.5 | 5.45 | 2.11 | 15.2 | 6.03 | 2.52 | 16.6 | 5.63 | 2.94 | 16.4 | 4.98 | 3.27 | 16.3 | 4.49 | 3.62 |
| 40 | 8.96 | 5.14 | 1.75 | 11.0 | 4.91 | 2.22 | 11.8 | 4.44 | 2.65 | 13.5 | 4.71 | 2.86 | 14.7 | 4.38 | 3.34 |
| 43 | 6.01 | 4.52 | 1.33 | 7.37 | 4.14 | 1.78 | 9.06 | 3.93 | 2.31 | 10.6 | 4.15 | 2.54 | 12.1 | 3.87 | 3.11 |
| **Normale** | | | | | | | | | | | | | | | |
| **DB** | **LWT** | | | | | | | | | | | | | | |
| | **5** | | | **10** | | | **15** | | | **20** | | | **25** | | |
| | **CC** | **PI** | **EER** | **CC** | **PI** | **EER** | **CC** | **PI** | **EER** | **CC** | **PI** | **EER** | **CC** | **PI** | **EER** |
| -5 | / | / | / | / | / | / | 8.11 | 0.94 | 8.56 | 8.92 | 1.04 | 8.60 | 9.77 | 1.02 | 9.61 |
| 0 | / | / | / | / | / | / | 7.94 | 1.19 | 6.71 | 9.38 | 1.12 | 8.39 | 10.3 | 1.12 | 9.13 |
| 5 | / | / | / | / | / | / | 7.71 | 1.30 | 5.93 | 9.66 | 1.17 | 8.28 | 10.7 | 1.25 | 8.50 |
| 10 | / | / | / | / | / | / | 9.17 | 1.61 | 5.69 | 10.7 | 1.39 | 7.65 | 11.6 | 1.44 | 8.07 |
| 15 | / | / | / | 8.56 | 1.71 | 5.02 | 11.5 | 1.90 | 6.01 | 13.9 | 1.83 | 7.59 | 14.3 | 1.72 | 8.31 |
| 20 | 7.05 | 1.81 | 3.88 | 11.5 | 2.64 | 4.31 | 13.2 | 2.71 | 4.87 | 14.6 | 2.63 | 5.56 | 15.4 | 2.36 | 6.49 |
| 25 | 9.29 | 2.70 | 3.43 | 13.2 | 3.27 | 4.02 | 14.9 | 3.49 | 4.25 | 15.7 | 3.39 | 4.62 | 15.9 | 2.86 | 5.55 |
| 30 | 9.33 | 3.39 | 2.75 | 13.0 | 3.95 | 3.29 | 14.9 | 3.97 | 3.74 | 15.3 | 3.77 | 4.04 | 15.2 | 3.21 | 4.75 |
| 35 | 8.91 | 4.03 | 2.21 | 12.5 | 4.53 | 2.75 | 13.7 | 4.21 | 3.24 | 14.3 | 3.96 | 3.60 | 14.8 | 3.66 | 4.05 |
| 40 | 7.32 | 3.91 | 1.87 | 9.23 | 3.80 | 2.43 | 10.3 | 3.51 | 2.93 | 12.1 | 3.77 | 3.21 | 13.3 | 3.45 | 3.84 |
| 43 | 4.93 | 3.57 | 1.38 | 5.79 | 3.10 | 1.87 | 7.21 | 2.90 | 2.48 | 9.02 | 3.22 | 2.81 | 9.51 | 2.73 | 3.48 |
| **Minimo** | | | | | | | | | | | | | | | |

| DB | LWT | | | | | | | | | | | | | | |
|---|---|---|---|---|---|---|---|---|---|---|---|---|---|---|---|
| | 5 | | | 10 | | | 15 | | | 20 | | | 25 | | |
| | CC | PI | EER | CC | PI | EER | CC | PI | EER | CC | PI | EER | CC | PI | EER |
| -5 | / | / | / | / | / | / | 5.25 | 0.59 | 8.92 | 5.76 | 0.65 | 8.86 | 6.33 | 0.63 | 10.08 |
| 0 | / | / | / | / | / | / | 5.16 | 0.73 | 7.01 | 6.07 | 0.69 | 8.75 | 6.64 | 0.70 | 9.47 |
| 5 | / | / | / | / | / | / | 4.14 | 0.65 | 6.37 | 5.24 | 0.59 | 8.80 | 5.71 | 0.62 | 9.15 |
| 10 | / | / | / | / | / | / | 5.09 | 0.82 | 6.16 | 5.94 | 0.72 | 8.20 | 6.43 | 0.73 | 8.75 |
| 15 | / | / | / | 5.26 | 0.98 | 5.32 | 6.11 | 0.95 | 6.41 | 6.94 | 0.83 | 8.37 | 8.18 | 0.88 | 9.21 |
| 20 | 3.56 | 0.88 | 4.04 | 4.99 | 1.12 | 4.49 | 6.56 | 1.28 | 5.15 | 8.05 | 1.38 | 5.86 | 8.69 | 1.27 | 6.86 |
| 25 | 4.45 | 1.27 | 3.52 | 5.45 | 1.29 | 4.22 | 7.01 | 1.57 | 4.47 | 8.25 | 1.70 | 4.85 | 8.64 | 1.49 | 5.81 |
| 30 | 4.43 | 1.58 | 2.81 | 5.34 | 1.55 | 3.44 | 6.95 | 1.78 | 3.91 | 7.96 | 1.87 | 4.26 | 8.19 | 1.67 | 4.92 |
| 35 | 4.06 | 1.79 | 2.27 | 5.78 | 2.01 | 2.87 | 6.82 | 1.97 | 3.47 | 7.60 | 1.95 | 3.90 | 8.16 | 1.88 | 4.33 |
| 40 | 3.31 | 1.77 | 1.86 | 4.32 | 1.73 | 2.50 | 5.04 | 1.66 | 3.03 | 6.46 | 1.94 | 3.33 | 7.56 | 1.93 | 3.91 |
| 43 | 1.69 | 1.20 | 1.41 | 2.77 | 1.44 | 1.93 | 3.77 | 1.46 | 2.58 | 4.59 | 1.59 | 2.89 | 6.06 | 1.68 | 3.61 |

# 6 Limiti di funzionamento

*Figura 2-6.1: Limiti di funzionamento del riscaldamento[1]*

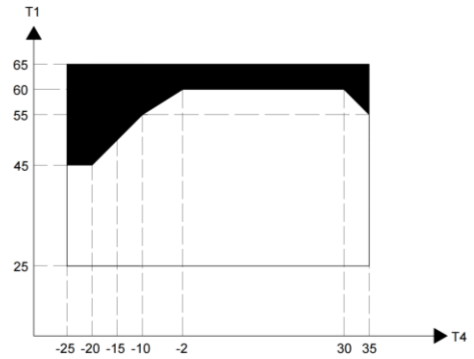


*Figura 2-6.2: Limiti di funzionamento del raffrescamento[1]*

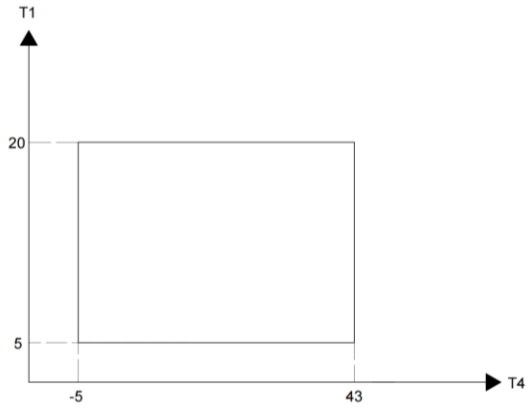


*Figura 2-6.3: Limiti di funzionamento per l'acqua calda sanitaria[1]*

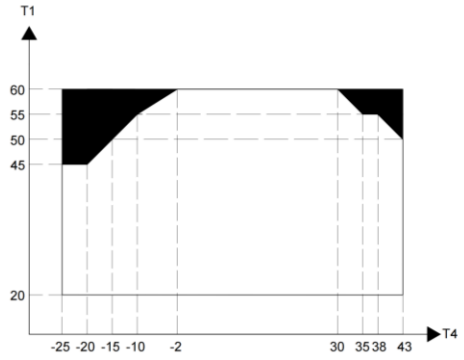


Abbreviazioni:

T4: Temperatura esterna (°C)

T1: Temperatura dell'acqua in uscita (°C )

IBH: Riscaldatore elettrico di riserva

AHS: Sorgente di calore aggiuntiva

Note:

1. ■ Solo IBH

2. □ Solo HP

# 7 Prestazioni idroniche

*Figura 2-7.1: Prestazioni idroniche THMLd-4(6，8，10)D/HBp-A*

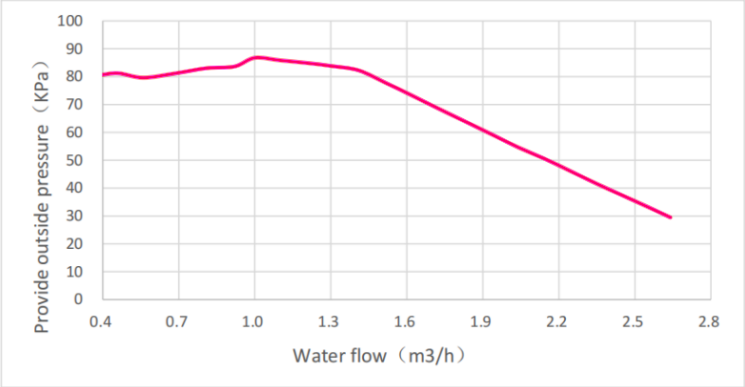


*Figura 2-7.1: Prestazioni idroniche THMLd-12D(S)/HBp-A,THMLd-14D(S)/HBp-A,THMLd-16D(S)/HBp-A*

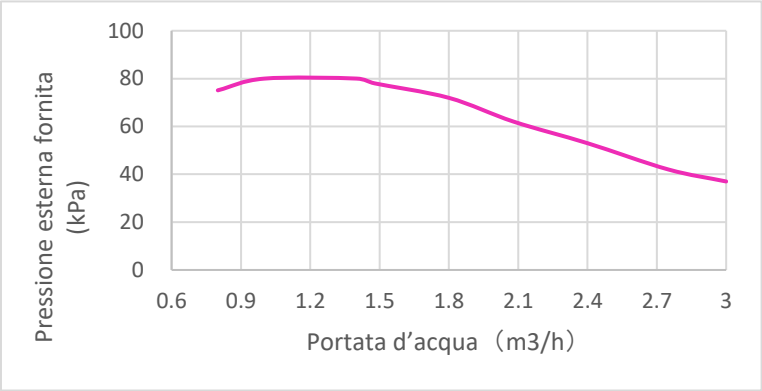


# 8 Livelli sonori

## 8.1 Panoramica

*Tabella 2-8.1* livelli di pressione sonora

| Nome modello | dB |
|---|---|
| *THMLd-4D/3HBp-A* | 44 |
| *THMLd-6D/3HBp-A* | 45 |
| *THMLd-8D/3HBp-A* | 47 |
| *THMLd-10D/3HBp-A* | 50 |
| *THMLd-12D/3HBp-A* | 53 |
| *THMLd-14D/3HBp-A* | 54 |
| *THMLd-16D/3HBp-A* | 55 |
| *THMLd-12S/6(9)HBp-A* | 53 |

| | |
|---|---|
| *THMLd-14S/6(9)HBp-A* | 54 |
| *THMLd-16S/6(9)HBp-A* | 55 |

Note:

1. Il livello di pressione sonora è misurato a 1 m davanti all'unità e a (1+H)/2 m (dove H è l'altezza dell'unità) dal pavimento in una camera semi-anecoica. Durante il funzionamento in loco, i livelli di pressione sonora possono essere più elevati a causa del rumore ambientale. Il livello di pressione sonora è il valore massimo testato nelle due condizioni di cui alla Nota 2 e alla Nota 3. Per il modello da 16 kW, il valore è calcolato ed è fornito a solo titolo di riferimento.

*Figura 2-8.1: Misura dei livelli di pressione sonora (unità di misura: mm)*

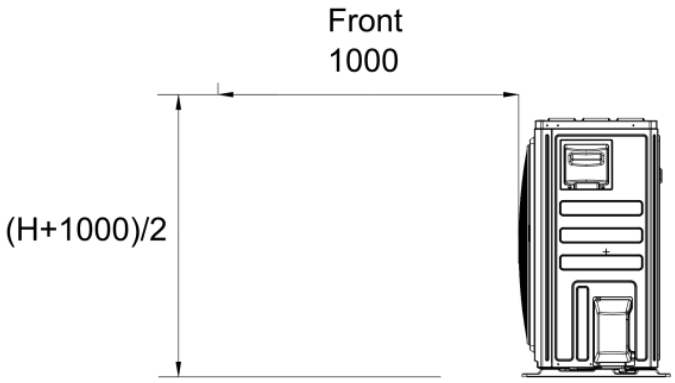


Note:

1. Il livello di pressione sonora è misurato a 1 m davanti all'unità e a (1+H)/2 m (dove H è l'altezza dell'unità) dal pavimento in una camera semi-anecoica. Durante il funzionamento in loco, i livelli di pressione sonora possono essere più elevati a causa del rumore ambientale. Il livello di pressione sonora è il valore massimo testato nelle due condizioni di cui alla Nota 2 e alla Nota 3.
   Per il modello da 16 kW, il valore è calcolato ed è fornito a solo titolo di riferimento.

2. Temperatura aria esterna 7$^{o}$C DB, 85% R.H.; EWT 30$^{o}$C, LWT 35$^{o}$C.

3. Temperatura aria esterna 35$^{o}$C DB; EWT 23$^{o}$C, LWT 18$^{o}$C.

# 9 Accessori

## 9.1 Unità esterna

| Nome | Forma | Quantità |
|---|---|---|
| Manuale dei dati tecnici | | 1 |
| Tubo flessibile di scarico | | 1 |
| Etichetta energetica | | 2 |
| Manuale d’uso (comando cablato) | | 1 |
| Manuale d'installazione ed uso | | 1 |
| Sensore di temperatura del serbatoio dell'acqua | | 1 |
| Comando cablato | | 1 |
| Cavo comando cablato | / | 1 |
| Filtro a Y | | 1 |

# Parte 3 Installazione e impostazione in loco

# 1 Prefazione alla parte 3

## 1.1 Note sui box per gli installatori

Le informazioni contenute nel presente Manuale tecnico possono essere utilizzate principalmente per la progettazione di un sistema TCL Tri-Thermal Mono. Altre informazioni importanti che possono essere utili soprattutto durante l'installazione sul campo sono state inserite in box intitolati “Note per gli installatori” come nell'esempio seguente.

- I box delle note per gli installatori contengono informazioni importanti che possono essere utili soprattutto durante l'installazione sul campo, piuttosto che durante la progettazione a tavolino degli impianti.

## 1.2 Definizioni

Nel presente Manuale tecnico, il termine “legislazione applicabile” si riferisce a tutte le leggi, gli standard, i codici, le norme, i regolamenti e le altre legislazioni nazionali, locali e di altro tipo che si applicano in una determinata situazione.

## 1.3 Precauzioni

Tutte le installazioni del sistema, inclusa l’installazione delle tubazioni del refrigerante, delle tubazioni dell’acqua e degli impianti elettrici, devono essere eseguite esclusivamente da professionisti competenti e adeguatamente qualificati, certificati e accreditati e in conformità a tutte le normative vigenti.

# 2 Installazione

## 2.1 Accettazione e disimballaggio

- Quando le unità vengono consegnate, verificare che non abbiano subito danni durante la spedizione. In caso di danni alla superficie o all'esterno di un'unità, presentare un rapporto scritto allo spedizioniere.
- Verificare che il modello, le specifiche e la quantità delle unità consegnate siano conformi all’ordine.
- Verificare che tutti gli accessori ordinati siano stati inclusi. Conservare il Manuale d'uso per futura consultazione.

## 2.2 Sollevamento

- Non rimuovere alcun elemento dell'imballaggio prima del sollevamento. Se le unità non sono imballate o se l'imballaggio è danneggiato, utilizzare tavole o un materiale di imballaggio adeguato per proteggere le unità.
- Sollevare un'unità alla volta utilizzando due corde per garantirne la stabilità.
- Durante il sollevamento, mantenere le unità in posizione verticale, assicurandosi che l'angolo rispetto alla verticale non superi i 30°.

### 2.3 Considerazioni sulla collocazione

La collocazione dell'unità esterna deve tenere in considerazione quanto segue:

- Il monoblocco non deve essere esposto all'irraggiamento diretto di una fonte di calore ad alta temperatura.
- Il monoblocco non deve essere installato in posizioni in cui polvere o sporcizia possano intaccare gli scambiatori di calore.
- Il monoblocco non deve essere installato in luoghi in cui si possa verificare l'esposizione a olio o a gas corrosivi o nocivi, come gas acidi o alcalini.
- Il monoblocco non deve essere installato in luoghi esposti a livelli elevati di salinità.
- Il monoblocco deve essere installato in posizioni con scarichi efficienti e ben ventilate.
- Il monoblocco deve essere installato in luoghi in cui il rumore dell'unità non disturbi i vicini.

**2.4 Installazione in condizioni di vento forte**

Un vento che soffia a una velocità di 5 m/s o più contro l'uscita dell'aria di un'unità esterna blocca il flusso d'aria attraverso l'unità, causando il deterioramento della capacità dell'unità stessa, un più rapido accumulo di gelo in modalità di riscaldamento o in modalità produzione di acqua calda sanitaria (Figura 3-2.1: Direzione di installazione in presenza di vento forte) e una potenziale perturbazione del funzionamento a causa dell'aumento della pressione nel circuito del refrigerante. L'esposizione a un vento molto forte può anche causare una rotazione eccessivamente rapida della ventola, con possibili danni alla stessa. Nei luoghi in cui è possibile che si verifichi un'esposizione a venti forti, è necessario tenere in considerazione quanto segue:

Per l'installazione dell'unità esterna in un luogo in cui è possibile prevedere la direzione del vento. Posizionare il lato di uscita ad angolo retto rispetto alla direzione del vento; fare riferimento alla Figura 3-2.1.

*Figura 3-2.4: Direzione di installazione in presenza di vento forte*

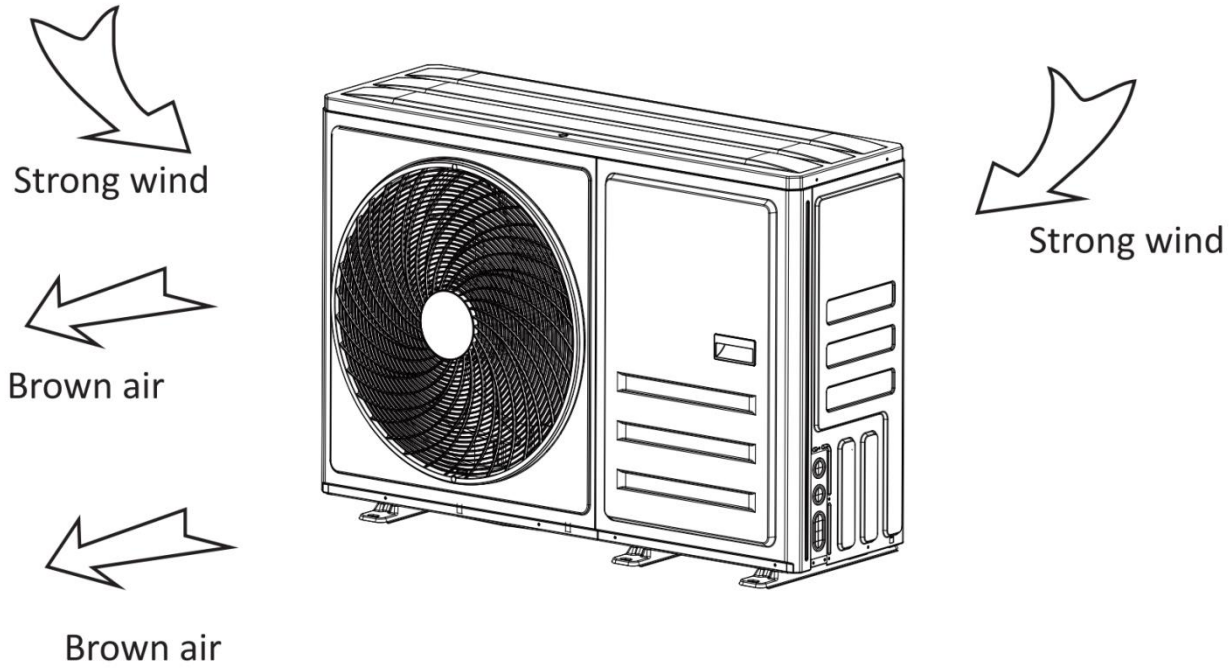


Se il lato di uscita dell'aria è rivolto verso il muro di un edificio, una recinzione o un riparo. Assicurarsi che lo spazio a disposizione sia sufficiente per l'installazione.

**2.5 Installazione in climi freddi**

L'installazione in climi freddi deve tenere in considerazione quanto segue: *Figura 3-2.5: Protezione dalla neve*

Non installare mai l'unità in un luogo in cui il lato di aspirazione possa essere esposto direttam

Per evitare l'esposizione al vento, installare un deflettore sul lato di scarico dell'aria dell'unità.

Per evitare l'esposizione al vento, installare l'unità con il lato di aspirazione rivolto verso la par

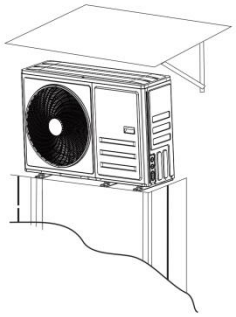

In caso di forti nevicate, installare una tettoia per evitare che la neve penetri nell'unità. Inoltre, l'altezza della struttura di base deve essere aumentata in modo da sollevare l'unità dal suolo. Fare riferimento alla Figura 3-2.2.

**2.6 Installazione in climi caldi**

Poiché la temperatura esterna è misurata tramite il termistore dell'aria dell'unità esterna, assicurarsi di installare l'unità esterna all'ombra o realizzare una tettoia in modo da evitare l'esposizione dell'unità alla luce solare diretta e l'influenza del calore del sole. In caso contrario l'unità potrebbe entrare in modalità protezione.

**2.7 Struttura di base**

La progettazione della struttura di base dell'unità esterna deve tenere in considerazione quanto segue:

Una base solida evita vibrazioni e rumori eccessivi. Le basi delle unità esterne devono essere realizzate su un terreno solido o su strutture sufficientemente robuste da sostenere il peso dell'unità.

Le basi devono essere alte almeno 100 mm per garantire un drenaggio sufficiente ed evitare che l'acqua penetri nella base stessa dell'unità.

È possibile utilizzare basi in acciaio o in calcestruzzo.

Il monoblocco non deve essere installato su strutture portanti che potrebbero essere danneggiate dall'accumulo di acqua in caso di ostruzione dello scarico.

Fissare saldamente l'unità alla fondazione mediante il bullone a espansione Φ10. È consigliabile avvitare i bulloni nella fondazione fino a raggiungere una lunghezza di 20 mm dalla superficie della fondazione stessa.

*Figura 3-2.7: Fissaggio dell'unità*

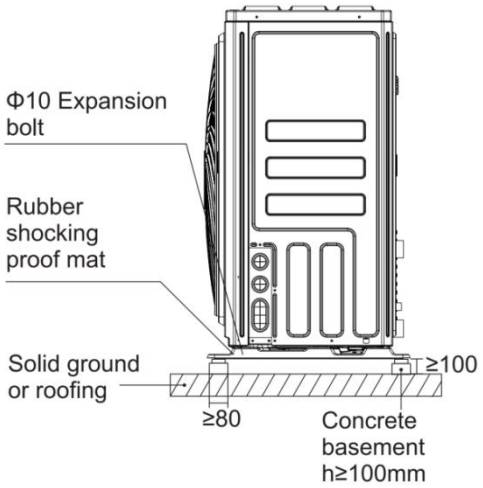


**2.8 Drenaggio**

È necessario prevedere una fossa di drenaggio per consentire lo scarico della condensa che potrebbe formarsi sullo scambiatore di calore lato aria quando l'unità funziona in modalità riscaldamento o acqua calda sanitaria. Il drenaggio deve garantire che la condensa sia incanalata lontano da strade e sentieri, soprattutto in climi in cui la condensa potrebbe congelare.

*Figura 3-2.4: Foro di scarico dei modelli 8-16kW*

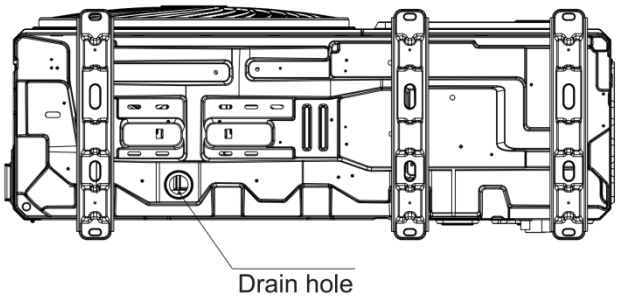


**2.9 Distanze**

## Installazione di unità singola

Le unità esterne devono essere distanziate in modo da consentire un flusso d'aria sufficiente attraverso ogni unità. Un flusso d'aria sufficiente attraverso gli scambiatori di calore è essenziale per il corretto funzionamento del monoblocco.

*Figura 3-2.5: Requisiti di installazione per unità singola (Unità di misura: mm)*

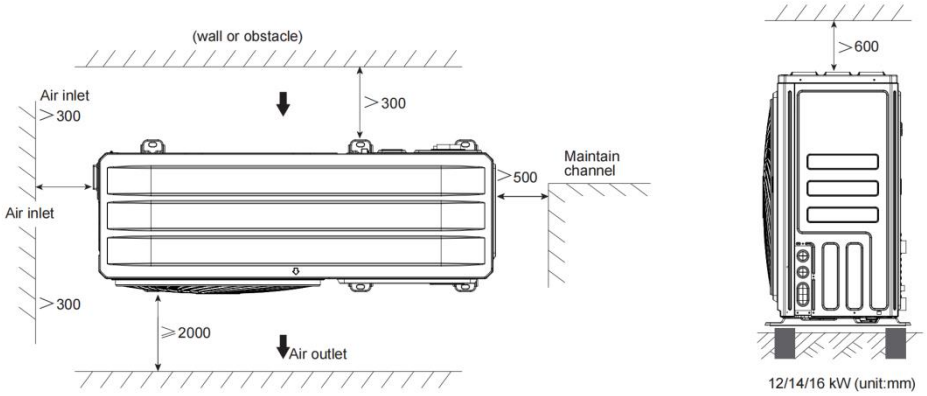


*Figura 3-2.6: Installazione con ostacoli davanti all'unità Tabella 3-2.1: Distanza minima da ostacoli davanti all'unità*

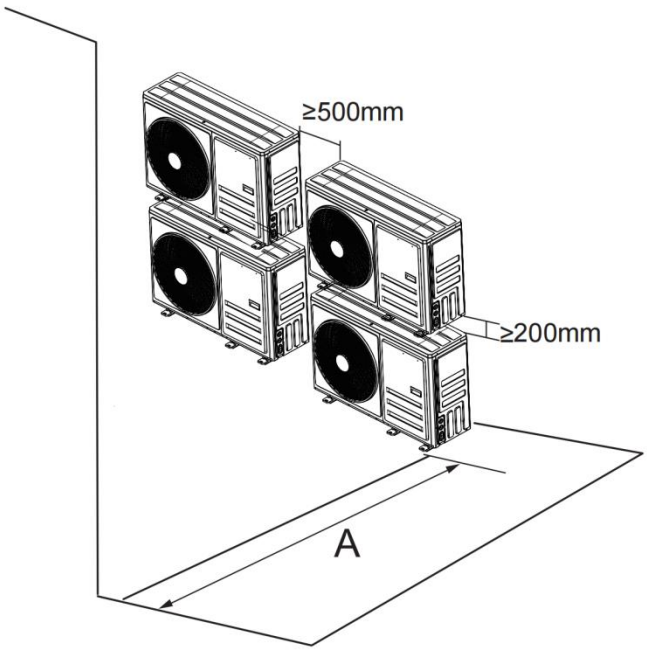


| Nome modello | A (mm) |
|---|---|
| *THMLd-4D/HBp-A*<br>*THMLd-6D/HBp-A* | 1000 |
| *THMLd-8D/HBp-A*<br>*THMLd-10D/HBp-A*<br>*THMLd-12D(S)/HBp-A*<br>*THMLd-14D(S)/HBp-A*<br>*THMLd-16D(S)/HBp-A* | 1500 |

*Figura 3-2.7: Installazione con ostacoli dietro l'unità*

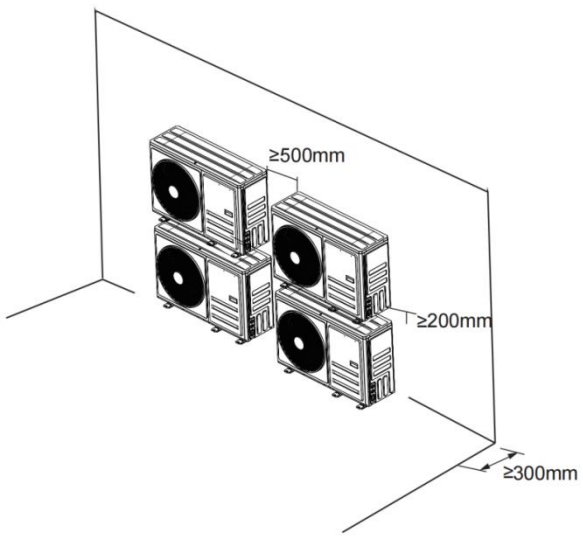


## Installazione su file

*Figura 3-2.8: Installazione su fila singola*

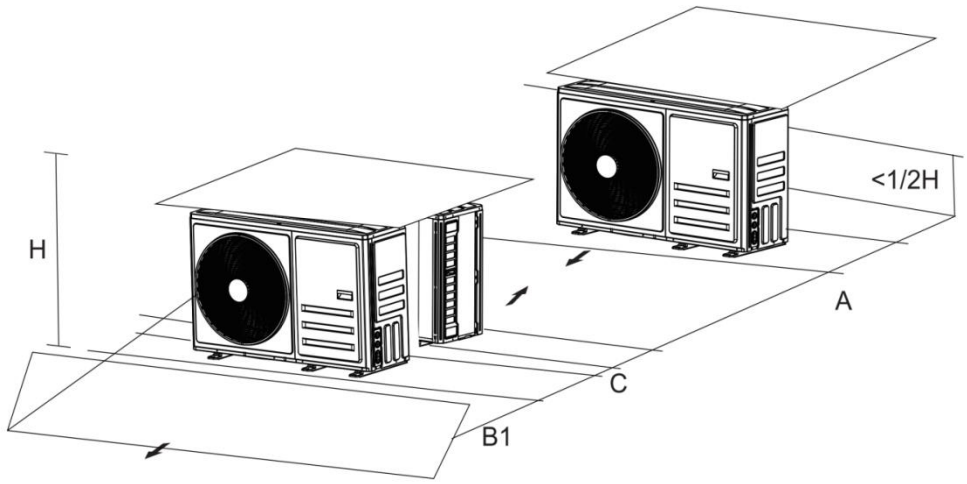


*Tabella 3-2.2: Requisiti di distanza per installazione su fila singola*

| Nome modello | A (mm) | B1 (mm) | B2 (mm) | C (mm) |
|---|---|---|---|---|
| *THMLd-4D/HBp-A*<br>*THMLd-6D/HBp-A* | ≥1500 | ≥500 | ≥150 | ≥300 |
| *THMLd-8D/HBp-A*<br>*THMLd-10D/HBp-A*<br>*THMLd-12D(S)/HBp-A*<br>*THMLd-14D(S)/HBp-A*<br>*THMLd-16D(S)/HBp-A* | ≥2000 | ≥1000 | ≥150 | ≥300 |

*Figura 3-2.9: Installazione su più file*

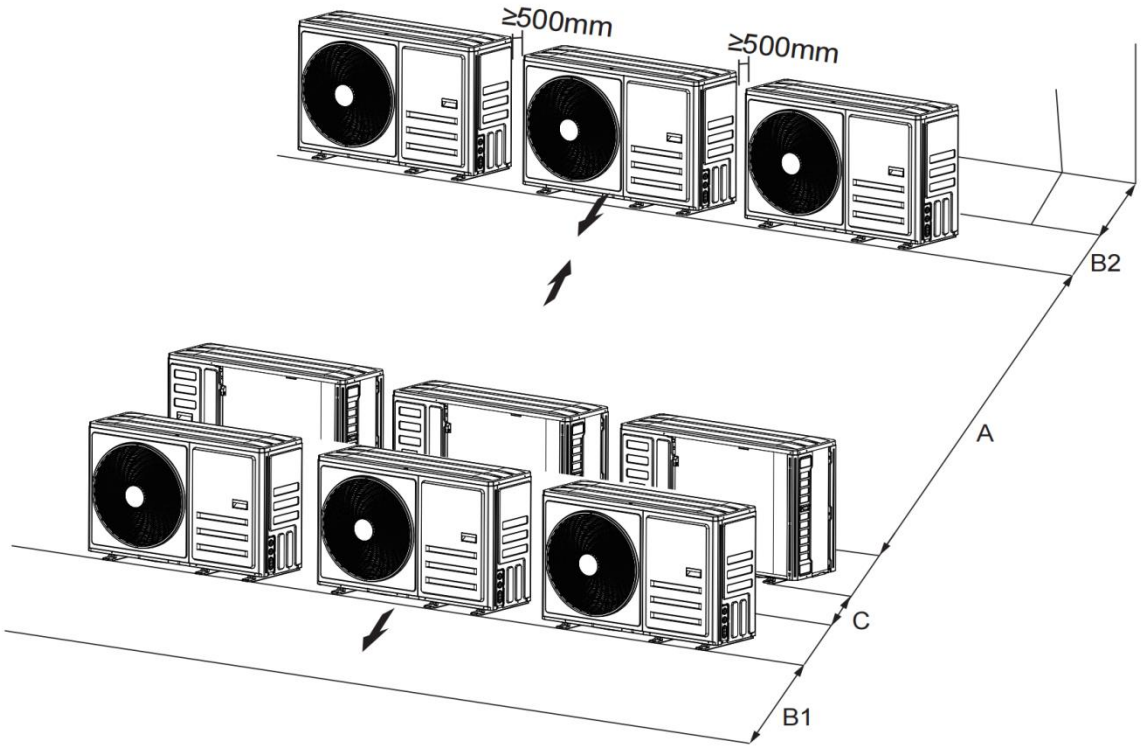


*Tabella 3-2.3: Requisiti di distanza per installazione su file multiple*

| Nome modello | A (mm) | B1 (mm) | B2 (mm) | C (mm) |
|---|---|---|---|---|
| *THMLd-4D/HBp-A*<br>*THMLd-6D/HBp-A* | ≥2500 | ≥1000 | ≥300 | ≥600 |
| *THMLd-8D/HBp-A*<br>*THMLd-10D/HBp-A*<br>*THMLd-12D(S)/HBp-A*<br>*THMLd-14D(S)/HBp-A*<br>*THMLd-16D(S)/HBp-A* | ≥3000 | ≥1500 | ≥300 | ≥600 |

# 3 Tubazioni dell'acqua

## 3.1 Controlli dei circuiti idraulici

Le unità Tri-Thermal Mono sono dotate di un ingresso e di un'uscita per il collegamento a un circuito idraulico. Le unità Tri-Thermal Mono devono essere collegate solo a circuiti idraulici chiusi. Il collegamento a un circuito idraulico aperto provocherebbe un'eccessiva corrosione

delle tubazioni dell'acqua. Utilizzare esclusivamente materiali conformi a tutte le normative vigenti.

Prima di proseguire con l'installazione dell'unità, verificare quanto segue:

- La pressione massima dell'acqua ≤ 3 bar.
- La temperatura massima dell'acqua ≤ 70°C secondo l'impostazione del dispositivo di sicurezza.
- Utilizzare sempre materiali compatibili con l'acqua utilizzata nell'impianto e con i materiali utilizzati nell'unità.

- Assicurarsi che i componenti installati nelle tubazioni sul campo siano in grado di resistere alla pressione e alla temperatura dell'acqua.
- Tutti i punti bassi del sistema devono essere dotati di rubinetti di scarico per consentire il drenaggio completo del circuito durante la manutenzione.
- Tutti i punti alti dell'impianto devono essere dotati di sfiati per l'aria. Gli sfiati devono essere situati in punti facilmente accessibili per la manutenzione. All'interno dell'unità è presente una valvola automatica di spurgo dell'aria. Verificare che la valvola di spurgo dell'aria non sia serrata in modo da consentire il rilascio automatico dell'aria presente nel circuito idraulico.

### 3.2 Controlli del volume d'acqua e della pre-pressione del vaso di espansione

I monoblocchi sono dotati di un vaso di espansione (8 l) con una pre-pressione predefinita di 1,5 bar. Per garantire il corretto funzionamento dell'unità, potrebbe essere necessario regolare la pre-pressione del vaso di espansione. Fare riferimento alla Tabella 3-3.1. Il volume totale dell'acqua nell'impianto deve essere di almeno 25 l (per le unità da 4/6/8kW, il volume minimo è 15 l) e non deve superare i limiti specificati nella Figura 3-3.1.

*Tabella 3-3.1: Regolazione della pre-pressione del vaso di espansione*

| Differenza tra le altezze di installazione 1 | Volume dell'acqua ≤ X l[2] | Volume dell'acqua > X l[2] |
|---|---|---|
| ≤ 12 m | Non è necessaria la regolazione della pre-pressione | Azioni richieste:<br>• La pre-pressione deve essere diminuita; calcolare secondo "Calcolo della pre-pressione del vaso di espansione "3<br>•Controllare se il volume dell'acqua è minore del volume massimo consentito (fare riferimento alla Figura 3-3.1) |
| > 12 m | Azioni richieste:<br>• La pre-pressione deve essere aumentata; calcolare secondo "Calcolo della pre-pressione del vaso di espansione"[2]<br>•Controllare se il volume dell'acqua è minore del volume massimo consentito (fare riferimento alla Figura 3-3.1) | Vaso di espansione nell'unità esterna troppo piccolo per l'impianto. È necessario un vaso di espansione esterno (fornito in loco). |

*Note:*

*1. Il dislivello è quello tra il punto più alto del circuito idraulico e il vaso di espansione dell'unità esterna. A meno che l'unità non si trovi nel punto più alto dell'impianto, nel qual caso il dislivello di installazione è considerato pari a zero.*

*2. Per le unità monofase da 12~16 kW e trifase da 12~16 kW, questo valore è 72 l, mentre per le unità da 4~10 kW è 30 l.*

*3. Calcolo della pre-pressione del vaso di espansione:*

*La pre-pressione (Pg) da impostare dipende dal dislivello massimo di installazione (H) ed è calcolata come Pg(bar)=(H(m)/10+0,3) bar*

Per determinare il volume d'acqua massimo consentito nell'intero circuito, procedere come segue:

- Determinare la pre-pressione calcolata (Pg) per il volume d'acqua massimo corrispondente utilizzando la figura 3-3.1.

*Figura 3-3.1: Volume d'acqua massimo*

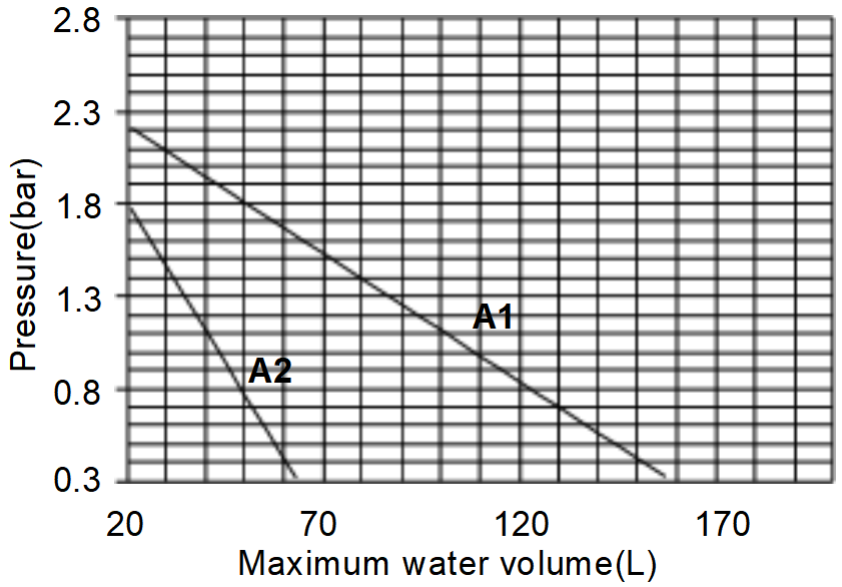


A1: Impianto senza glicole per unità monofase da 10~16 kW
e unità trifase da 12~16 kW

A2: Impianto senza glicole per unità da 4/6/8 kW

Verificare che il volume totale dell'acqua nell'intero circuito idraulico sia inferiore a questo valore. In caso contrario, il vaso di espansione all'interno dell'unità è troppo piccolo per l'impianto.

**Esempio**

L'unità (16 kW) è installata nel punto più alto del circuito idraulico. Il volume totale dell'acqua nel circuito idraulico è di 150 l.

Poiché 150 l sono più di 72 l, la pre-pressione deve essere diminuita, facendo riferimento alla Tabella 3-3:1.

La pre-pressione richiesta è: Pg(bar) = (H(m)/10+0,3) bar = (0/10+0,3) bar = 0,3 bar

Il volume d'acqua massimo corrispondente, come indicato nella Figura 3-1.7, è di circa 160 l.

Poiché il volume totale dell'acqua (150 l) è inferiore al volume dell'acqua massimo (160 l), il vaso di espansione è sufficiente per l'impianto.

Quando è necessario modificare la pre-pressione predefinita del vaso di espansione (1,5 bar), seguire le linee guida:

Utilizzare solo azoto secco per regolare la pre-pressione del vaso di espansione.

Una regolazione inadeguata della pre-pressione del vaso di espansione può causare il malfunzionamento dell'impianto. La pre-pressione deve essere regolata solo da un installatore autorizzato.

Se il vaso di espansione dell'unità è troppo piccolo per l'impianto, è necessario un vaso di espansione aggiuntivo.

Calcolare la pre-pressione del vaso di espansione: Pg(bar) = (H(m)/10+0,3) bar Anche il vaso di espansione installato nell'unità deve regolare la pre-pressione.

Calcolare il volume necessario del vaso di espansione aggiuntivo: V1=0,0693*Vacqua/(2,5-Pg)-V0 Vacqua: il volume dell'acqua nell'impianto

V0: il volume del vaso di espansione di cui è dotata l'unità (per 5~9 kW, V0=2 l; per 10~16 kW, V0=5 l)

### 3.3 Collegamento dei circuiti idraulici

I collegamenti di ingresso e uscita dell'acqua devono essere eseguiti correttamente in conformità alle etichette apposte sull'unità esterna. L'ingresso di aria, umidità o polvere nel circuito idraulico può causare problemi. Pertanto, quando si collega il circuito idraulico, tenere sempre presente quanto segue:

Utilizzare solo tubi puliti.

Tenere l'estremità del tubo verso il basso per rimuovere le bave.

Coprire l'estremità del tubo quando lo si inserisce attraverso una parete per evitare l'ingresso di polvere e sporcizia.

Utilizzare un buon sigillante per filetti per sigillare le connessioni. La sigillatura deve essere in grado di resistere alle pressioni e alle temperature dell’impianto.

Quando si utilizzano tubazioni metalliche non in rame, assicurarsi di isolare i due tipi di materiali l'uno dall'altro per evitare effetti di corrosione galvanica.

Poiché il rame è un materiale morbido, utilizzare strumenti adeguati per collegare il circuito idraulico. Utensili inadeguati possono danneggiare i tubi.

### 3.4 Protezione antigelo del circuito idraulico

La formazione di ghiaccio può causare danni al sistema idronico. Poiché l'unità esterna può essere esposta a temperature inferiori allo zero, è necessario prestare attenzione per evitare il congelamento dell’impianto. Tutte le parti interne del sistema idronico sono isolate per ridurre le perdite di calore. Anche le tubazioni sul campo devono essere isolate.

Il software integra funzioni speciali che utilizzano la pompa di calore per proteggere l'intero impianto dal congelamento.

Quando la temperatura del flusso d'acqua nell'impianto scende a un determinato valore, l'unità riscalda l'acqua, utilizzando la pompa di calore, il rubinetto elettrico o il riscaldatore di riserva. La funzione di protezione antigelo si disattiva solo quando la temperatura sale fino a un determinato valore.

In caso di interruzione dell'alimentazione elettrica, le funzioni di cui sopra non proteggeranno l'unità dal

congelamento.

Poiché un'interruzione dell'alimentazione elettrica potrebbe verificarsi quando l'unità non è sorvegliata, il fornitore raccomanda di utilizzare un liquido antigelo nell'impianto dell'acqua.

In base alla temperatura esterna minima prevista, assicurarsi che l'impianto dell'acqua sia riempito con una concentrazione di glicole conforme a quanto indicato nella tabella seguente. L'aggiunta di glicole all'impianto influisce sulle prestazioni dell'unità. Il fattore di correzione della capacità dell'unità, della portata e della perdita di carico del sistema è elencato nelle tabelle 3-3.2 e 3-3.3.

*Tabella 3-3.2: Glicole etilenico*

| Concentrazione di glicole etilenico (%) | Coefficiente di modifica | | | | Temperatura esterna minima (°C) |
|---|---|---|---|---|---|
| | Modifica della capacità di raffrescamento | Modifica della potenza in ingresso | Resistenza dell'acqua | Modifica della portata d'acqua | |
| 0 | 1.000 | 1.000 | 1.000 | 1.000 | 0 |
| 10 | 0.984 | 0.998 | 1.118 | 1.019 | -5 |
| 20 | 0.973 | 0.995 | 1.268 | 1.051 | -15 |
| 30 | 0.965 | 0.992 | 1.482 | 1.092 | -25 |

*Tabella 3-3.3: Glicole propilenico*

| Concentrazione di glicole propilenico (%) | Coefficiente di modifica | | | | Temperatura esterna minima (°C) |
|---|---|---|---|---|---|
| | Modifica della capacità di raffrescamento | Modifica della potenza in ingresso | Resistenza dell'acqua | Modifica della portata d'acqua | |
| 0 | 1.000 | 1.000 | 1.000 | 1.000 | 0 |
| 10 | 0.976 | 0.996 | 1.071 | 1.000 | -4 |
| 20 | 0.961 | 0.992 | 1.189 | 1.016 | -12 |
| 30 | 0.948 | 0.988 | 1.380 | 1.034 | -20 |

Il glicole non inibito diventa acido per effetto dell'ossigeno. Questo processo è accelerato dalla presenza di rame e a temperature più elevate. Il glicole acido non inibito attacca le superfici metalliche e forma cellule di corrosione galvanica che causano gravi danni all'impianto. È di estrema importanza:

- Che il trattamento dell'acqua sia eseguito correttamente da uno specialista qualificato.
- Selezionare un glicole con inibitori di corrosione per contrastare gli acidi formati dall'ossidazione dei glicoli.
- In caso di installazione con un serbatoio di acqua calda sanitaria, è consentito solo l'uso di glicole propilenico. In altri impianti è possibile utilizzare il glicole etilenico.
- Non utilizzare glicole per autoveicoli perché i loro inibitori di corrosione hanno una durata limitata e contengono silicati che potrebbero sporcare o intasare l'impianto;

- che le tubazioni zincate non siano utilizzate negli impianti con glicole in quanto potrebbero causare la precipitazione di alcuni elementi nel liquido.

## 3.4 Immagazzinaggio delle tubazioni in rame

### 3.4.1 Fornitura, conservazione e sigillatura delle tubazioni in rame

**Nota per gli installatori:**

- Assicurarsi che le tubazioni non si pieghino o si deformino durante la consegna o l'immagazzinaggio.
- Nei cantieri, conservare le tubazioni in un luogo dedicato.
- Per evitare la penetrazione di polvere o umidità, le tubazioni devono essere mantenute sigillate durante l'immagazzinaggio e fino al momento del collegamento. ▪ Se le tubazioni devono essere utilizzate entro un breve periodo, sigillare le aperture con tappi o nastro adesivo. Se le tubazioni tubazioni essere immagazzinate per un periodo di tempo prolungato, caricarle di azoto a 0,2-0,5 MPa e sigillare le aperture mediante brasatura.
- La conservazione direttamente sul terreno espone le tubazioni al rischio di penetrazione di polvere e acqua. È possibile utilizzare supporti in legno per sollevare le tubazioni da terra.
- Durante l'installazione, se devono essere inserite in un foro in una parete, assicurarsi di sigillare le tubazioni per evitare la penetrazione di polvere e/o calcinacci.
- Assicurarsi di sigillare le tubazioni installate all'esterno (soprattutto sono installate verticalmente) per evitare che la penetrazione della pioggia.

## 3.5 Flussostato dell'acqua

Nel flussostato potrebbe penetrare acqua. Poiché non può essere drenata, potrebbe congelare alle basse temperature.
Il flussostato deve pertanto essere rimosso e asciugato prima della reinstallazione nell'unità.
Ruotare in senso antiorario per rimuovere il flussostato dell'acqua.
Asciugare a fondo il flussostato dell'acqua.

## 3.6 Aggiunta di acqua

Collegare l'alimentazione dell'acqua alla valvola di riempimento e aprire la valvola.

Assicurarsi che la valvola di spurgo automatico dell'aria sia aperta (almeno 2 giri).

Fare riferimento alla Figura 3-3.3.

Rabboccare l'acqua finché il manometro non indica una pressione di circa 2,0 bar. Eliminare il più possibile l'aria presente nel circuito utilizzando la valvola di spurgo dell'aria. La presenza di aria nel circuito idraulico potrebbe causare il malfunzionamento del riscaldatore elettrico di riserva.

Do not fasten the black plastic cover on the automatic air purge valve at the topside of the unit when the system is running.Open the automatic bleed valve, turn it counterclockwise for 1.5-2 turns to release air from the system.

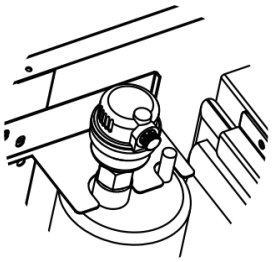

## 3.7 Isolamento delle tubazioni dell'acqua

L'intero circuito idraulico, incluse tutte le tubazioni, deve essere isolato per evitare la formazione di condensa durante il funzionamento in modalità raffrescamento, la riduzione della capacità di riscaldamento e raffrescamento e prevenire il congelamento delle tubazioni esterne dell'acqua durante l'inverno. Il materiale isolante deve avere almeno un grado di resistenza al fuoco B1 e deve essere conforme a tutte le normative vigenti. Lo spessore dei materiali sigillanti deve essere di almeno 13 mm con una conducibilità termica di 0,039 W/mK per evitare il congelamento delle tubazioni esterne dell'acqua. Se la temperatura ambiente esterna è superiore a 30°C e l'umidità è superiore a RH 80%, lo spessore dei materiali sigillanti deve essere di almeno 20 mm per evitare la formazione di condensa sulla superficie della tenuta.

# 4 Cablaggi elettrici

## 4.1 Informazioni generali

**Attenzione**

- L'installazione e il cablaggio devono essere eseguiti da professionisti competenti e adeguatamente qualificati, certificati e accreditati e in conformità a tutte le normative vigenti.
- Gli impianti elettrici devono essere messi a terra in conformità a tutte le normative vigenti.
- Gli interruttori di sovracorrente e gli interruttori di corrente residua (interruttori di guasto verso terra) devono essere utilizzati in conformità a tutte le normative vigenti.
- Gli schemi di cablaggio illustrati nel presente manuale forniscono solo una guida generale per i collegamenti e non intendono includere né includono tutti i dettagli di installazioni specifiche.
- Le tubazioni dell'acqua, il cablaggio di alimentazione e il cablaggio di comunicazione son o generalmente instradati in parallelo. Tuttavia il cablaggio di comunicazione non deve essere collegato al cablaggio di alimentazione. Per evitare interferenze con i segnali, il cablaggio di alimentazione e quello di comunicazione non devono passare nella stessa canalina. Se l'alimentazione è inferiore a 10 A, è necessario mantenere una distanza di almeno 300 mm tra le canaline del cablaggio di alimentazione e di comunicazione; se l'alimentazione è compresa tra 10 A e 50 A, è necessario mantenere una distanza di almeno 500 mm.

## 4.2 Precauzioni

- Fissare i cavi in modo che non entrino in contatto con le tubazioni (soprattutto sul lato alta pressione).
- Fissare il cablaggio elettrico con fascette in modo che non entri in contatto con le tubazioni, in particolare sul lato alta pressione.
- Assicurarsi di non esercitare alcuna pressione esterna sui connettori dei terminali.
- Quando si installa il dispositivo di interruzione del circuito di terra, assicurarsi che sia compatibile con l'inverter (resistente ai disturbi elettrici ad alta frequenza) per evitare l'apertura non necessaria del dispositivo di interruzione del circuito di terra.
- Questa unità è dotata di un inverter. L'installazione di un condensatore di rifasamento non solo riduce l'effetto di miglioramento del fattore di potenza, ma può anche causare un riscaldamento anomalo del condensatore a

causa delle onde ad alta frequenza. Non installare mai un condensatore di rifasamento per evitare incidenti.

### 4.3 Guida

- La maggior parte del cablaggio di campo dell'unità deve essere effettuato sulla morsettiera all'interno della scatola degli interruttori. Per accedere alla morsettiera, rimuovere il pannello di servizio della scatola degli interruttori.
- Fissare tutti i cavi con fascette.
- Per il riscaldatore elettrico di riserva è necessario un circuito di alimentazione elettrica dedicato.
- Un impianto dotato di un serbatoio dell’acqua calda sanitaria (fornito in loco) richiede un circuito di alimentazione dedicato per il riscaldatore a immersione.

Fissare i cablaggi nell'ordine indicato di seguito:

- Posare il cablaggio elettrico in modo che il coperchio anteriore non si sollevi durante le operazioni di cablaggio e fissarlo saldamente.
- Per le operazioni di cablaggio, seguire gli schemi elettrici. Fare riferimento alle Figure da 2-4:1 a 2-4:5 della sezione 2, 4 “Schemi elettrici”.
- Installare i cavi e fissare saldamente il coperchio in modo che si inserisca correttamente.

### 4.4 Panoramica dei cablaggi

*Figura 3-5.1: Panoramica dei cablaggi*

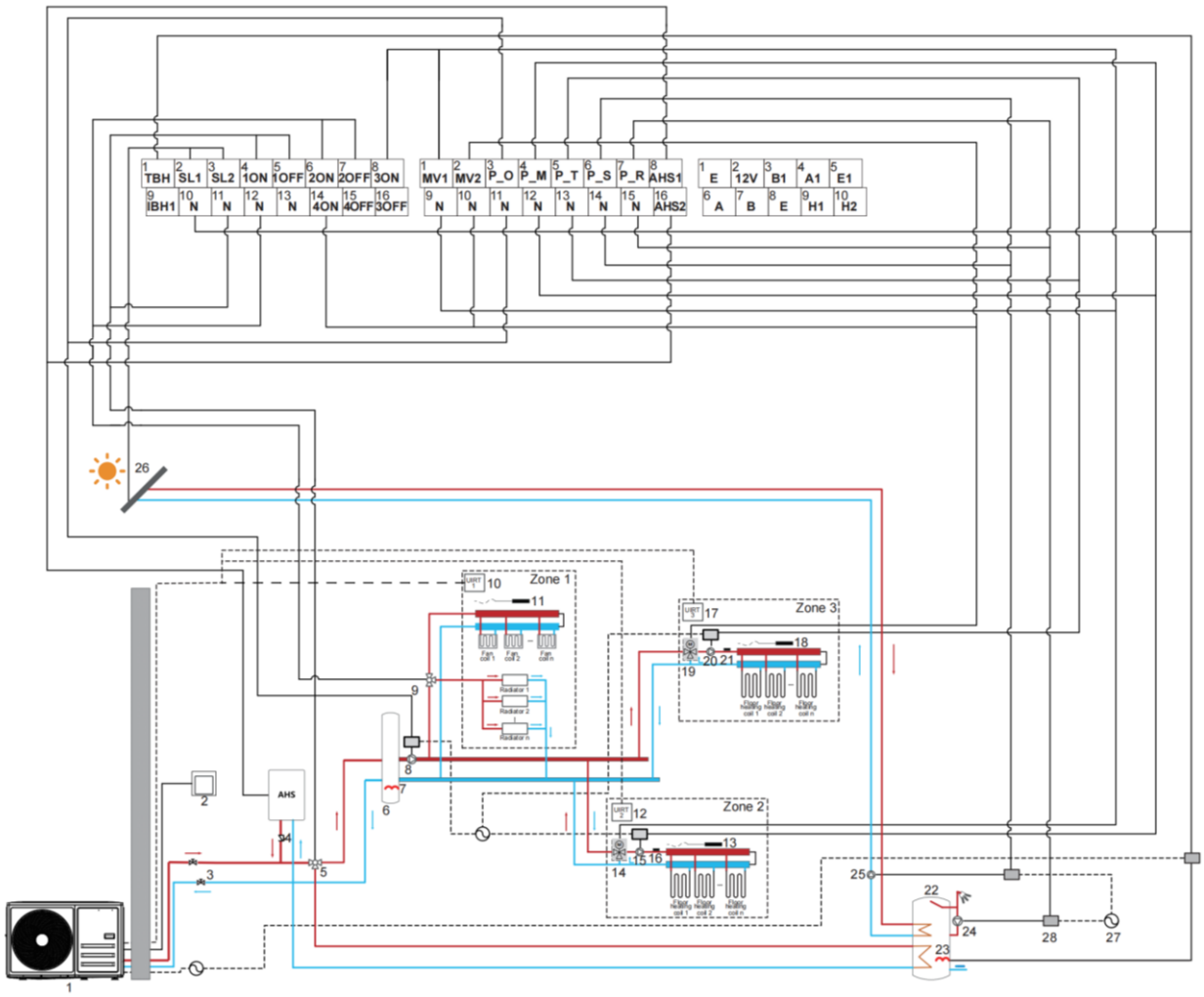


| Codice | Assieme | Codice | Assieme |
|---|---|---|---|
| 1 | Monoblocco | 15 | Pompa zona 2 (P_M) |
| 2 | Comando cablato | 16 | Sensore di temperatura ingresso acqua riscaldamento a pavimento zona 2 (Tw_2) |
| 3 | Valvola di arresto | 17 | Termostato ambiente zona 3 |
| 4 | Valvola di ritegno | 18 | Sensore di temperatura interna zona 3 (Tr_3) |
| 5 | Valvola a tre vie 1(SV1) | 19 | Valvola di miscelazione zona 3 |
| 6 | Serbatoio tampone | 20 | Pompa zona 3 (P T) |
| 7 | Riscaldatore elettrico serbatoio tampone (IBH1) | 21 | Sensore di temperatura ingresso acqua riscaldamento a pavimento zona 3 |
| 8 | Pompa zona 1 (P_O) | 22 | Serbatoio acqua calda sanitaria |
| 9 | Valvola a tre vie 2(SV2) | 23 | Riscaldamento elettrico serbatoio acqua (TBH) |
| 10 | Termostato ambiente zona 1 | 24 | Pompa acqua calda sanitaria (P_R) |
| 11 | Sensore di temperatura interna zona 1 (Tr_1) | 25 | Pompa dell'acqua a energia solare (P_S) |

| | | | |
|---|---|---|---|
| 12 | Termostato ambiente zona 2 | 26 | Pannelli solari |
| 13 | Sensore di temperatura interna zona 2 (Tr_2) | 27 | Alimentazione |
| 14 | Valvola di miscelazione zona 2 | 28 | Contattore |

*a. Quando si utilizza la valvola di miscelazione nella zona 3, i terminali collegati sono in posizione 8(3ON), 14(4ON), 13(N).*

*b. La posizione dei terminali 1(MV1) e 8(3ON) controlla la rotazione in senso orario della valvola di miscelazione, 2(MV2) e 14(4ON) controllano la rotazione in senso antiorario della valvola di miscelazione.*

*c.I codici 7-34 sono forniti in loco.*

| **Requisiti di cablaggio** | | | | |
|---|---|---|---|---|
| **Elemento** | **Descrizione** | **Corrente** | **Numero richiesto di conduttori** | **Corrente di funzionamento massima** |
| 1 | Cavo di segnale kit a energia solare | CA | 2 | 200 mA |
| 2 | Cavo interfaccia utente | CA | 5 | 200 mA |
| 3 | Cavo termostato ambiente | CA | 2 | 200 mA(1) |
| 4 | Cavo di controllo pompa solare | CA | 2 | 200 mA(1) |
| 5 | Cavo di controllo pompa di circolazione esterna | CA | 2 | 200 mA(1) |
| 6 | Cavo di controllo pompa ACS | CA | 2 | 200 mA(1) |
| 7 | SV2: Cavo di controllo valvola a tre vie | CA | 3 | 200 mA(1) |
| 8 | SV1: Cavo di controllo valvola a tre vie | CA | 3 | 200 mA(1) |
| 9 | Cavo di controllo riscaldatore booster | CA | 2 | 200 mA(1) |

(1) Sezione minima dei cavi AWG18 (0,75 $mm^2$).

Se la corrente del carico è elevata, è necessario un contattore CA.

## 6 Pompa di circolazione interna

La pompa è controllata tramite un segnale digitale a modulazione di larghezza di impulso a bassa tensione: questo significa che la velocità di rotazione dipende dal segnale di ingresso. La velocità varia in funzione del profilo di ingresso. La relazione tra pressione statica esterna e portata d'acqua è descritta nella Parte 2, sezione 7 "Prestazioni idroniche".

TCL

Ananda GmbH

Daimlerstr. 6

D-76185 Karlsruhe

Mail:info@ananda-trading.de