Angebotszeichnung
QUOTATION DRAWING

Teil-Nr *ITEM-NO*	Stueck *QTY*	Benennung *PART - NAME*	Werkstoff *MATERIAL*	Oberflaeche *SURFACE*
1	1	Housing NW 12-10-0 °	PA66-GF30	black
2	1	Weld ring NW 12	PA66-GF30	black
3	1	Locking bail NW 12	EN10270-3-1.4310-NS-1.5	black
4	1	O-RING 16.0 X 3.0	EPDM-60	black

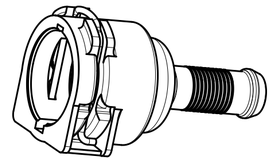

MASSSTAB/*SCALE* 1:1

SCHNITT/*SECTION* A-A

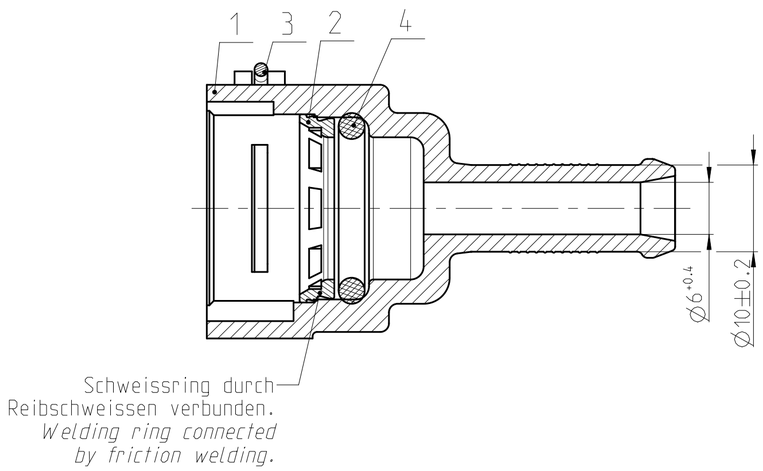

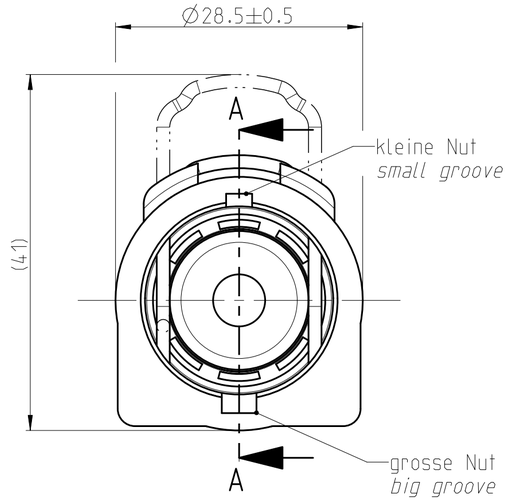

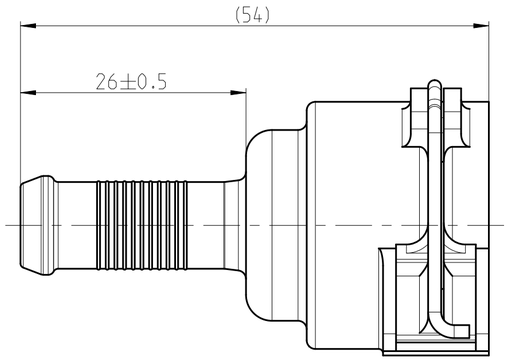

Ansicht Stutzen/*View spigot*
MASSSTAB/*SCALE* 2:1

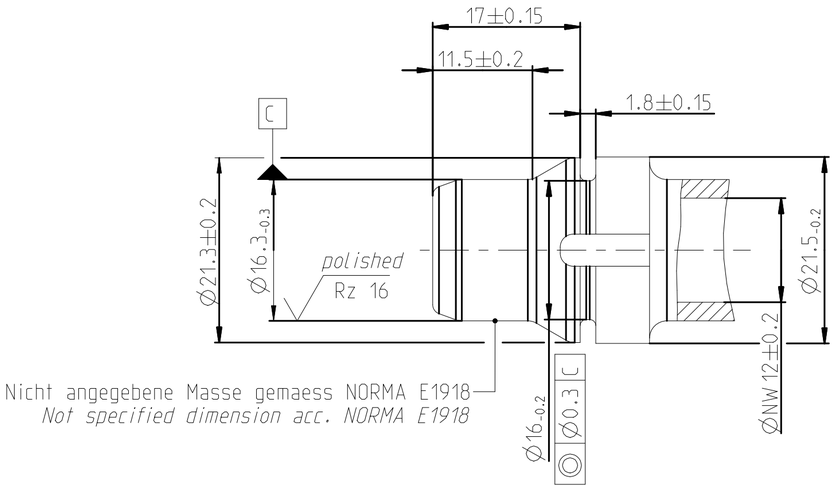

NORMAQUICK - ASSEMBLY MARKING	
Customer part-No.:	-
Trademark:	-
Manufacturer code:	NORMA-RSS
NORMA date code:	XX YY
Material code molding part:	>PA66-GF30<

B

Performance features for NQ PS3 - VDA	
Medium	coolant water
Operation temperature	-40°C thrue 135°C, short-term up to 150°C (max. 30 min. over lifetime)
Operation pressure	0 to 2 bar, partial pulsating (sinusoidal)

INDEX Teil *PART*	Zeichg *DWG*	Anz. *QTY.*	Anderung *DESCRIPTION*	Aend.Nr. *CHANGE-NO.*	Datum *DATE*	Bearb. *DRAWN*	Gepr. *CHECKED*
-	-	-	-	-	-	-	-
-	-	-	-	-	-	-	-
-	B	1	*Drawing separeted; 1) Notes added;*	-	2015-02-02	Mandalapure	Ries
-	A	1	Stueckliste Pos.3 war DIN2076-1.4310-1.5/*Part list Pos.3 was DIN2076-1.4310-1.5*	607696	2009-07-08	RK/IC	Bauer

Allgemeintoleranz: *GENERAL TOLERANCE:*	Form- und Lagetoleranz: *FORM AND POS. TOL.:*	Abmass fuer Winkel: *DEVIATION FOR ANGLE:*	Gewicht / *WEIGHT:* errechnet *CALCULATED*	gewogen *actual*	Volumen: *VOLUME:*	Pruefkennzeichnung: *TEST MARKING:*
DIN 16901-130	DIN ISO 2768	±2 °	-	-	- cm³	

Projektions-Methode 1
1st ANGLE PROJECTION
DIN ISO 128-30

Material: see parts list
Material-No.: - -
Oberflaeche: see parts list
SURF. QUAL.: -

Massstab: *SCALE:* 2:1 -		Datum/*DATE*	Name/*NAME*
	Bearb./*DRAWN*	2003-10-27	TS/SK
	Gepr./*CHECKED*	-	Bauer
	Norm	-	-

NORMA-Patentnummer:
PATENT NUMBER:

Bandlaenge:
LENGTH OF BAND:

Schutzvermerk nach ISO 16016 beachten
CONSIDER AFTER PROTECTION NOTICE ISO 16016

ZNE:
-

Ursprung/Anfrage:
ENQUIRY-No.:
9900011609

NORMA Germany GmbH
Postfach 1149 ● 63461 Maintal

© COPYRIGHT BY NORMA Group

PART NAME:
NORMAQUICK PS3 NW 12-10-0 °
Locking Bail black
-

Benennung:
NORMAQUICK PS3 NW 12-10-0 °
Verriegelungsbuegel schwarz
-

Kunde/*CUSTOMER:* -

DIN A	*SHEET:*	*SHEETS*
2	1	1

Zeichnungs-Nr./*DRAWING-NO.:* 0702 8016 012

INDEX *PART*	*DWG*	TYPE
00	0B	Q

SUB.F.: - *SUB.FROM:* -

CAD-SYSTEM Pro/Engineer
DRAWING-NAME: 07028016012_Q
MODEL-NAME: 07028016012
MODEL-TYP: ASSEM