TEST REPORT

Reference No......	:	WTZ20F11088526R1X1N
Applicant.....	:	Huizhou Ledsun Lighting Co.,Ltd.
Address.....	:	4F of Huicheng industrial building, Huitai Indutry zone,
Manufacturer	:	Huizhou Ledsun Lighting Co.,Ltd.
Address.....	:	4F of Huicheng industrial building, Huitai Indutry zone,
Product Name.....	:	LED Desk Lamp
Model No......	:	LS1048, LS1058
Ratings.....	:	110-240VAC, 50/60Hz, LED 8.5W
Regulation.....	:	COMMISSION REGULATION (EU) 2019/2020 COMMISSION REGULATION (EU) 2021/341 COMMISSION DELEGATED REGULATION (EU) 2019/2015 COMMISSION DELEGATED REGULATION (EU) 2021/340
Test standard.....	:	See following pages
Test Category.....	:	Entrusted Test
Date of Receipt sample.....	:	2020-11-23
Date of Test.....	:	2020-11-23 to 2021-05-28
Date of Issue.....	:	2021-05-28
Test Report Form No......	:	WPL-EU2020-02A
Test Result.....	:	See following pages

Remarks:
The results shown in this test report refer only to the sample(s) tested, this test report cannot be reproduced, except in full, without prior written permission of the company. The report would be invalid without specific stamp of test institute and the signatures of compiler and approver.

Prepared By:
Waltek Testing Group (Foshan) Co., Ltd.
Address: No.13-19, 2/F., 2nd Building, Sunlink International Machinery City,
Chencun, Shunde District, Foshan, Guangdong, China
Tel:+86-757-23811398 Fax:+86-757-23811381 E-mail:info@waltek.com.cn

Compiled by:

Finn Yu / Project Engineer

Approved by:

Akin Xu / Manager

Test item description.....:	LED Module
Type of test objects.....:	LED Module of LS1048/LS1058
Trademark.....:	N/A
Subcontract / test (clause)…....:	N/A
Address…….....:	N/A
Order description……..…:	Evaluation ecodesign requirements and energy labelling of light sources according to (EU) 2019/2020, (EU) 2021/341, (EU) 2019/2015 and (EU) 2021/340; and ecodesign requirements of separate control gears according to (EU) 2019/2020 and (EU) 2021/341.

Product information	
• Light sources	☒
Supplier's name or trade mark: ---	
Supplier's address: ---	
Model identifier: LED Module of LS1048/LS1058	
Type of light source:	
- Lighting technology used:	☐ HL ☐ LFL T5 HE ☐ LFL T5 HO ☐ CFLni ☐ other FL ☐ HPS ☐ MH ☐ other HID ☒ LED ☐ OLED ☐ mixed_____ ☐ other_____.
- Non-directional or directional:	☒ NDLS ☐ DLS
- Light source cap-type (or other electric interface):	☐ - ☒ N/A
- Mains or non-mains:	☒ MLS ☐ NMLS
- Connected light source (CLS):	☐ yes ☒ no
- Colour-tuneable light source:	☐ yes ☒ no
- Envelope:	☒ no ☐ second ☐ non-clear
- High luminance light source:	☐ yes ☒ no
- Anti-glare shield:	☐ yes ☒ no
- Dimmable:	☐ yes ☐ only with specific dimmers ☒ no

General product parameters

Energy consumption in on-mode [kWh/1000h]	5/9/5
Energy efficiency class	☐ A ☐ B ☐ C ☐ D ☒ E ☐ F ☐ G
Useful luminous flux (Φ_{use}) [lm]	550/1100/570 in ☒ sphere ☐ wide cone ☐ narrow cone
Correlated colour temperature [K]	3000/4000/6500
On-mode power (P_{on}) [W]	4.5/8.5/4.5
Standby power (P_{sb}) [W]	0.00
Networked standby power (P_{net}) for CLS [W]	☐ - ☒ N/A
Colour rendering index	80
Outer dimensions [mm]	Height: - ; Width: - ; Depth: - . (Supplier considered)
Spectral power distribution	See Appendix 2
Claim of equivalent power [W]	☐ yes - ☒ N/A
Chromaticity coordinates (x and y)	x=0.433, y=0.401 / x=0.366, y=0.366 / x=0.314, y=0.338

Peak luminous intensity [cd] *(directional)*	☐ - ☒ N/A
Beam angle [°] *(directional)*	☐ - ☒ N/A
R9 colour rendering index value *(LED and OLED)*	☒ 11/23/5 ☐ N/A
Survival factor *(LED and OLED)*	☒ 1.00 ☐ N/A
Lumen maintenance factor *(LED and OLED)*	☒ 0.96 ☐ N/A
Displacement factor (cos φ1) *(LED and OLED mains)*	☒ 0.53/0.56/0.53 ☐ N/A
Colour consistency in McAdam ellipses *(LED and OLED)*	☒ 2/4/1 ☐ N/A
Claims that an LED light source replaces a fluorescent light source without integrated ballast of a particular wattage [W] *(LED and OLED mains)*	☐ yes - ☒ N/A
Flicker metric (Pst LM) *(LED and OLED mains)*	☒ 0.1 ☐ N/A
Stroboscopic effect metric (SVM) *(LED and OLED mains)*	☒ 0.1 ☐ N/A
Others (Light sources)	
Rated $L_{70}B_{50}$ life (hours)	30000
• Control gear	☐
- Control gear technology used:	☐ HL light sources ☐ FL light sources ☐ HID light sources ☐ LED or OLED light sources
- Multi-wattage:	☐ yes ☐ no
- Dimmable:	☐ yes ☐ no
- Connected:	☐ yes ☐ no

Possible test case verdicts

- test case does not apply to the test object..... : N or N/A (Not applicable)
- test object does meet the requirement.....: P(ass)
- test object does not meet the requirement..... : F(ail)

Copy of marking plate

Requirements of information refer to clause of this report.

General remark

"(see remark #)" refers to a remark appended to the report.
"(see appended table)" refers to a table appended to the report.
Throughout this report a point is used as the decimal separator.

1. The samples were pre-conditioned for 60 minutes and were performed at voltage 230VAC, 50Hz.
2. The tests were performed with the sample in lighting-surface vertically downward position.
3. The model LED Module is White-Tunable product and has three mode CCTs; all tests at modes CCT 3000K, 4000K and CCT 6500K cover this specification.
4. All tests were performed on LED Module as light sources to cover the eco design requirements.
5. Detail information for models covered in this report as below list:

Item	Model	Rating	CCT	LED Type	Driver
1	LED Module of LS1048/LS1058	110-240VAC, 50/60Hz, LED 8.5W	3000K/ 4000K/ 6500K	---	---
2	LS1048	110-240VAC, 50/60Hz, LED 8.5W	3000K/ 4000K/ 6500K	1pcs LED Module	---
3	LS1058	110-240VAC, 50/60Hz, LED 8.5W	3000K/ 4000K/ 6500K	1pcs LED Module	---

Test Method

All submitted samples were tested according to implementation measure the Commission regulation (EU) 2019/2020 and (EU) 2021/341 used in conjunction with Commission delegated regulation (EU) 2019/2015 and (EU) 2021/340.

Regulation:

COMMISSION REGULATION (EU) 2019/2020
laying down ecodesign requirements for light sources and separate control gears pursuant to Directive 2009/125/EC of the European Parliament and of the Council and repealing Commission Regulations (EC) No 244/2009, (EC) No 245/2009 and (EU) No 1194/2012.

COMMISSION REGULATION (EU) 2021/341
amending Regulations (EU) 2019/2020 with regard to ecodesign requirements for light sources and separate control gears.

COMMISSION DELEGATED REGULATION (EU) 2019/2015
supplementing Regulation (EU) 2017/1369 of the European Parliament and of the Council with regard to energy labelling of light sources and repealing Commission Delegated Regulation (EU) No 874/2012.

COMMISSION DELEGATED REGULATION (EU) 2021/340
amending Delegated Regulations (EU) 2019/2015 with regard to energy labelling requirements for light sources.

Test / Reference Standards:

☒ (EU) 2019/2020	☒ (EU) 2019/2015
☒ (EU) 2021/341	☒ (EU) 2021/340
☒ EN 62612:2013/AC:2016-10/A1:2017/A11:2017/AC:2017/A2:2018	
☒ EN 62717:2017/A2:2019	☐ EN 62442-1:2018
☐ EN 62722-2-1:2016	☐ IEC 62442-2:2018
☒ IEC/TR 61547-1:2017	☒ CIE 84:1989
☒ IEC/TR 63158:2018 (CIE TN:006-2016)	☒ CIE 18.2:1983
☐ IEC/TR 61341:2010	☒ CIE 63:1984
☐ EN 50563:2011/A1:2013	☒ CIE 15:2018
☐ IEC 62442-3:2018	☒ CIE 13.3:1995

Test Condition

Initial test and final flux measurement:
The measurements were made in a draught-free room at a temperature of 25 ± 1°C, a relative humidity of 65 % maximum, an average air velocity of less than 0.2 m/s and steady state operation of the light sources. The test voltage is stable within ± 0.5 %, during stabilization periods, this tolerance being ± 0.2 % at the moment of measurements. The total harmonic content of the supply voltage shall not exceed 3 %. The harmonic content is defined as the r.m.s. summation of the individual harmonic components using the fundamental as 100 %.

Endurance test:
The switching cycles are to be conducted in a room with an ambient temperature of 25 ± 10°C and an average air velocity of less than 0.2 m/s. The switching cycles on the sample shall be conducted in free air in a vertical base-up position. The applied voltage during the switching cycles shall have a tolerance within 2 %. The total harmonic content of the supply voltage shall not exceed 3 %. Standards provide guidance on the supply voltage source.

Photometric and Electrical Measurement

Integrating Sphere System:
The system includes AC power source, digital power meter, DC power supply, spectrophotometer, and integrating sphere. The system is calibrated by standard light source before measurement. The system and standard light source has been calibrated regularly and traceable to the National Primary Standards. The ambient temperature measured at inside the sphere.

The 4π geometry was used during measurement. The product was operated in its intended orientation in application and calculated from the spectral radiant flux measurements taken at 1 nm intervals over the range of 380 to 780 nm, and was recorded in this report.

Goniophotometer System:
The system includes AC power source, digital power meter, DC power supply and goniophotometer. The system is calibrated by standard light source before measurement. The standard light source has been calibrated regularly and traceable to the National Primary Standards. The ambient temperature measured

at a point not more than 1 m from the sample and at the same height as the sample.
The type C goniophotometer was used for measuring total luminous flux, luminous intensity distribution, and color spatial uniformity. The product was operated in its intended orientation in application, and was recorded in this report.

Flicker Measurement

Equipment:

1) The photodetector used for photometric measurements shall be a silicon detector corrected to closely fit the Commission Internationale de l'Eclairage (CIE) spectral luminous efficiency curve (V). Ensure that the measurement equipment receives the appropriate voltage range from the photodetector, using an amplifier if necessary.
2) The equipment measurement period shall be ≥ 100 ms.
3) The equipment sampling rate used shall be ≥ 2 kHz.

Test Procedure:

a) Install the sample in the test environment without a dimmer in the circuit.
b) Set power supply to rated voltage and frequency of the device. If a range is specified, test sample at the midpoint of the range.
c) Apply rated voltage/frequency to the device.
d) If sample has been stabilized for measurements previously and the stabilization time recorded, the sample may be considered stabilized after operating for this period of time.
e) Record readings from measurement equipment to determine sample's light output periodic frequency. Calculate the flicker index and percent flicker, as applicable.
f) Remove power from sample.

The reported values of P_{st}, SVM show the highest value measured. the waveform digitizer used to capture the waveform data used for the calculation of the reported metrics must have:

Parameter		Units	Value
Dynamic range of waveform amplitude	P_{st}		≥ 1000:1 (60 dB)
	SVM		≥ 100:1 (40 dB)
Sampling Time	P_{st}	Seconds	≥ 180
	SVM	Seconds	≥ 1
Sampling Rate	P_{st}	kHz	≥ 10
	SVM	kHz	≥ 20
Temporal bandwidth (-3 dB cutoff frequency)	P_{st}	kHz	≥ 0.5
	SVM	kHz	≥ 5

COMMISSION REGULATION (EU) 2019/2020				
Clause	Requirement + Test		Result – Remark	Verdict
Annex I	**Definitions applicable for the Annexes**			P
Annex II	**Ecodesign requirements**			P
	For the purposes of compliance and verification of compliance with the requirements of this Regulation, measurements and calculations shall be made using harmonised standards the reference numbers of which have been published for this purpose in the Official Journal of the European Union, or other reliable, accurate and reproducible methods, which take into account the generally recognised state-of-the-art.		See page 4.	P
1.	**Energy efficiency requirements**			P
(a)	From 1 September 2021, the declared power consumption of a light source P_{on} shall not exceed the maximum allowed power P_{onmax}, defined as a function of the declared useful luminous flux Φ_{use} and the declared colour rendering index CRI as follows:		See appendix 1	P
	$P_{onmax} = C \times (L + \Phi_{use}/(F \times \eta)) \times R$		3000K:P_{onmax} =6.57W (Declared) =6.71W (Measured) 4000K:P_{onmax} =11.52W (Declared) =12.07W (Measured) 3000K:P_{onmax} =6.75W (Declared) =6.87W (Measured)	P
	- The values for threshold efficacy (η) and end loss factor (L) are specified in below table, depending on the light source type.			P
	Table: Threshold efficacy (η) and end loss factor (L)			P
	Light source description	Threshold efficacy (η) / End loss factor (L)		P
	Organic light-emitting diode (OLED)	65.0 / 1.5		N
	Light-emitting diode (LED)	120.0 / 1.5	η = 120.0; L = 1.5	P
	Connected LED light sources (LED CLS)	120.0 / 2.0		N
	- Basic values for correction factor (C) depending on light source type, and additions to C for special light source features are specified in below table.			P
	Table: Correction factor C depending on light source characteristics			P
	Light source type	Basic C value		P
	Non-directional (NDLS) not operating on mains (NMLS)	1.00		N
	Non-directional (NDLS) operating on mains (MLS)	1.08	C = 1.08	P
	Directional (DLS) not operating on mains (NMLS)	1.15		N
	Directional (DLS) operating on mains (MLS)	1.23		N
	Special light source feature	Bonus on C		P
	DLS with anti-glare shield	+0.20		N
	Colour-tuneable light source (CTLS)	+0.10		N
	High luminance light sources (HLLS)	+0.0058 × Luminance-		N

COMMISSION REGULATION (EU) 2019/2020				
Clause	Requirement + Test		Result – Remark	Verdict
		HLLS - 0.0167		
	The bonus for HLLS shall not be combined with the basic C-value for DLS (basic C-value for NDLS shall be used for HLLS).			N
	- Efficacy factor (F) is:			P
	1.00 for non-directional light sources (NDLS, using total flux)		F = 1.00	P
	0.85 for directional light sources (DLS, using flux in a cone)			N
	- CRI factor (R) is:			P
	0.65 for CRI ≤ 25;			N
	(CRI+80)/160 for CRI > 25, rounded to two decimals.		R = 1.00	P
	Light sources that allow the end-user to adapt the spectrum and/or the beam angle of the emitted light, thus changing the values for useful luminous flux, colour rendering index (CRI) and/or correlated colour temperature (CCT), and/or changing the directional/non-directional status of the light source, shall be evaluated using the reference control settings.			N
	The standby power P_{sb} of a light source shall not exceed 0.5 W.		See appendix 1	P
	The networked standby power P_{net} of a connected light source shall not exceed 0.5 W.			N
	The allowable values for P_{sb} and P_{net} shall not be added together.			N
(b)	From 1 September 2021, the values set in below table for the minimum energy efficiency requirements of a separate control gear operating at full-load shall apply:			N
	Table: Minimum energy efficiency for separate control gear at full-load			N
	Declared output power of the control gear (P_{cg}) or declared power of the light source (P_{ls}) in W	Minimum energy efficiency		N
	Control gear for LED or OLED light sources all wattages P_{cg}	$P_{cg}^{0.81}/(1.09 \times P_{cg}^{0.81} + 2.10)$		N
	Multi-wattage separate control gears shall comply with the requirements according to the maximum declared power on which they can operate.			N
	The no-load power P_{no} of a separate control gear shall not exceed 0.5 W. This applies only to separate control gear for which the manufacturer or importer has declared in the technical documentation that it has been designed for no-load mode.			N
	The standby power P_{sb} of a separate control gear shall not exceed 0.5 W.			N
	The networked standby power P_{net} of a connected separate control gear shall not exceed 0.5 W.			N
	The allowable values for P_{sb} and P_{net} shall not be added together.			N
2.	**From 1 September 2021, the functional requirements specified in below table shall apply for light sources:**			P
	Table: Functional requirements for light sources			P
	Colour rendering	CRI ≥ 80	See appendix 1	P
		CRI > 0 for HID with Φ_{use} > 4 klm		N
		CRI > 0 for light sources intended for Use		N

COMMISSION REGULATION (EU) 2019/2020				
Clause	Requirement + Test		Result – Remark	Verdict
		in outdoor applications, industrial applications or other applications where lighting standards allow a CRI < 80		
	Displacement factor (DF, cos φ1) at power input Pon for LED and OLED MLS	No limit at $P_{on} \leqslant 5$ W		N
		DF ≥ 0.5 at 5 W < P_{on} ≤ 10 W	See appendix 1	P
		DF ≥ 0,7 at 10 W < P_{on} ≤ 25 W		N
		DF ≥ 0,9 at 25 W < P_{on}		N
	Lumen maintenance factor (for LED and OLED)	The lumen maintenance factor X_{LMF}% after endurance testing according to Annex V shall be at least $X_{LMF,MIN}$ % calculated as follows: $X_{LMF,MIN}\% = 100 \times e^{\frac{(3000 \times \ln(0.7))}{L_{70}}}$ If the calculated value for $X_{LMF,MIN}$ exceeds 96.0 %, an $X_{LMF,MIN}$ value of 96.0 % shall be used	$X_{LMF,MIN}$%= 96.0% See appendix 1	P
	Colour consistency for LED and OLED light sources	Variation of chromaticity coordinates within a six-step MacAdam ellipse or less.	See appendix 1	P
	Flicker for LED and OLED MLS	P_{st} LM ≤ 1.0 at full-load	See appendix 1	P
	Stroboscopic effect for LED and OLED MLS	SVM ≤ 0.9 at full-load; From 1 September 2024: SVM ≤ 0,4 at full-load	See appendix 1	P
		No limit for light sources intended for use in outdoor applications, industrial applications or other applications where lighting standards allow a CRI < 80		N
3.	**Information requirements**			P
	From 1 September 2021 the following information requirements shall apply:			P
(a)	Information to be displayed on the light source itself			P
	For all light sources, except CTLS, LFL, CFLni, other FL, and HID, the value and physical unit of the useful luminous flux (lm) and correlated colour temperature (K) shall be displayed in a legible font on the surface if, after the inclusion of safety-related information, there is sufficient space available for it without unduly obstructing the light emission.		550/1100/570 lm 3000K/4000K/6500 K	P
	For directional light sources, the beam angle (°) shall also be indicated.			N
	If there is room for only two values, the useful luminous flux and the correlated colour temperature shall be displayed. If there is room for only one value, the useful luminous flux shall be displayed.			P
(b)	Information to be visibly displayed on the packaging			P
(1)	Light source placed on the market, not in a containing product		Supplier considered	P
	If a light source is placed on the market, not in a containing product, in a packaging containing information to be visibly displayed at a point-of-sale prior to its purchase, the following information shall be clearly and prominently displayed on the packaging:			P
	(a) the useful luminous flux (Φuse) in a font at least twice as large		550/1100/570 lm in	P

COMMISSION REGULATION (EU) 2019/2020			
Clause	Requirement + Test	Result – Remark	Verdict
	as the display of the on-mode power (P_{on}), clearly indicating if it refers to the flux in a sphere (360°), in a wide cone (120°) or in a narrow cone (90°);	sphere (360°)	
	(b) the correlated colour temperature, rounded to the nearest 100 K, also expressed graphically or in words, or the range of correlated colour temperatures that can be set;	3000K/4000K/6500 K	P
	(c) the beam angle in degrees (for directional light sources), or the range of beam angles that can be set;		N
	(d) electrical interface details, e.g. cap- or connector-type, type of power supply (e.g. 230 V AC 50 Hz, 12 V DC);	230VAC 50Hz	P
	(e) the $L_{70}B_{50}$ lifetime for LED and OLED light sources, expressed in hours;	30000 hours	P
	(f) the on-mode power (P_{on}), expressed in W;	4.5/8.5/4.5 W	P
	(g) the standby power (P_{sb}), expressed in W and rounded to the second decimal. If the value is zero, it may be omitted from the packaging;	0 W	P
	(h) the networked standby power (P_{net}) for CLS, expressed in W and rounded to the second decimal. If the value is zero, it may be omitted from the packaging;		N
	(i) the colour rendering index, rounded to the nearest integer, or the range of CRI-values that can be set;	80	P
	(j) if CRI< 80, and the light source is intended for use in outdoor applications, industrial applications or other applications where lighting standards allow a CRI< 80, a clear indication to this effect.		N
	(k) if the light source is designed for optimum use in non-standard conditions (such as ambient temperature Ta ≠ 25 °C or specific thermal management is necessary): information on those conditions;		N
	(l) a warning if the light source cannot be dimmed or can be dimmed only with specific dimmers or with specific wired or wireless dimming methods. In the latter cases a list of compatible dimmers and/or methods shall be provided on the manufacturer's website;		P
	(m) if the light source contains mercury: a warning of this, including the mercury content in mg rounded to the first decimal place;		N
	(n) if the light source is within the scope of Directive 2012/19/EU, without prejudice to marking obligations pursuant to Article 14(4) of Directive 2012/19/EU, or contains mercury: a warning that it shall not be disposed of as unsorted municipal waste.		N
	Items (a) to (d) shall be displayed on the packaging in the direction meant to face prospective buyer; for other items this is also recommended, if space permits.		P
	For light sources that can be set to emit light with different characteristics, the information shall be reported for the reference control settings. In addition, a range of obtainable values may be indicated.		N
	The information does not need to use the exact wording on the list above. Alternatively, it may be displayed in the form of graphs, drawings or symbols.		P
(2)	Separate control gears		N
	If a separate control gear is placed on the market as a stand-alone product and not as a part of a containing product, in a packaging containing information to be visibly displayed to potential buyers,		N

COMMISSION REGULATION (EU) 2019/2020			
Clause	Requirement + Test	Result – Remark	Verdict
	prior to their purchase, the following information shall be clearly and prominently displayed on the packaging:		
	(a) the maximum output power of the control gear (for HL, LED and OLED) or the power of the light source for which the control gear is intended (for FL and HID);		N
	(b) the type of light source(s) for which it is intended;		N
	(c) the efficiency in full-load, expressed in percentage;		N
	(d) the no-load power (P_{no}), expressed in W and rounded to the second decimal, or the indication that the gear is not intended to operate in no-load mode. If the value is zero, it may be omitted from the packaging but shall nonetheless be declared in the technical documentation and on websites;		N
	(e) the standby power (P_{sb}), expressed in W and rounded to the second decimal. If the value is zero, it may be omitted from the packaging but shall nonetheless be declared in the technical documentation and on websites;		N
	(f) where applicable, the networked standby power (P_{net}), expressed in W and rounded to the second decimal. If the value is zero, it may be omitted from the packaging but shall nonetheless be declared in the technical documentation and on websites;		N
	(g) a warning if the control gear is not suitable for dimming of light sources or can be used only with specific types of dimmable light sources or using specific wired or wireless dimming methods. In the latter cases, detailed information on the conditions in which the control gear can be used for dimming shall be provided on the manufacturer's or importer's website;		N
	(h) a QR-code redirecting to a free-access website of the manufacturer, importer or authorised representative, or the internet address for such a website, where full information on the control gear can be found.		N
	The information does not need to use the exact wording on the list above. Alternatively, it may be displayed in the form of graphs, drawings or symbols.		N
(c)	Information to be visibly displayed on a free-access website of the manufacturer, importer or authorised representative		P
(1)	Separate control gears		N
	For any separate control gear that is placed on the EU market, the following information shall be displayed on at least one free-access website:		N
	(a) the information specified in point 3(b)(2), except 3(b)(2)(h);		N
	(b) the outer dimensions in mm;		N
	(c) the mass in grams of the control gear, without packaging, and without lighting control parts and non-lighting parts, if any and if they can be physically separated from the control gear;		N
	(d) instructions on how to remove lighting control parts and non-lighting parts, if any, or how to switch them off or minimise their power consumption during control-gear testing for market surveillance purposes;		N
	(e) if the control gear can be used with dimmable light sources, a list of minimum characteristics that the light sources should have to be fully compatible with the control gear during dimming, and possibly a list of compatible dimmable light sources;		N

COMMISSION REGULATION (EU) 2019/2020			
Clause	Requirement + Test	Result – Remark	Verdict
	(f) recommendations on how to dispose of it at the end of its life in line with Directive 2012/19/EU.		N
	The information does not need to use the exact wording in the list above. Alternatively, it may be displayed in the form of graphs, drawings or symbols.		N
(d)	Technical documentation		P
(1)	Separate control gears		N
	The information specified in point 3(c)(2) of this Annex shall also be contained in the technical documentation file drawn up for the purposes of conformity assessment pursuant to Article 8 of Directive 2009/125/EC.		N
(e)	Information for products specified in point 3 of Annex III		N
Annex IV	**Verification procedure for market surveillance purposes**		P
	The verification tolerances defined in this Annex relate only to the verification of the measured parameters by Member State authorities. These tolerances shall not be used by the manufacturer, importer or authorised representative as an allowed tolerance to establish the values in the technical documentation or in interpreting these values with a view to achieving compliance or to communicate better performance by any means.		P
	Where a model has been designed to be able to detect it is being tested (e.g. by recognising the test conditions or test cycle), and to react specifically by automatically altering its performance during the test with the objective of reaching a more favourable level for any of the parameters specified in this Regulation or included in the technical documentation or included in any of the documentation provided, the model and all equivalent models shall be considered not compliant.		P
	When verifying the compliance of a product model with the requirements laid down in this Regulation pursuant to Article 3(2) of Directive 2009/125/EC, the authorities of the Member States shall apply the following procedure:		P
	1. The Member State authorities shall verify one single unit of the model for points 2(a) and 2(b) of this Annex.		P
	The Member State authorities shall verify 10 units of the light source model or 3 units of the separate control gear model. The verification tolerances are laid down in Table 6 of this Annex.	10 units light source	P
	2. The model shall be considered to comply with the applicable requirements if:		P
	(a) the values given in the technical documentation pursuant to point 2 of Annex IV to Directive 2009/125/EC (declared values), and, where applicable, the values used to calculate these values, are not more favourable for the manufacturer, importer or authorised representative than the results of the corresponding measurements carried out pursuant to paragraph (g) thereof; and		P
	(b) the declared values meet any requirements laid down in this Regulation, and any required product information published by the manufacturer, importer or authorised representative does not contain values that are more favourable for the manufacturer, importer or authorised representative than the declared values; and		P
	(c) when the authorities of the Member State test the units of the model, the determined values comply with the respective verification tolerances as given in Table 6 of this Annex, where ‘determined		P

COMMISSION REGULATION (EU) 2019/2020			
Clause	Requirement + Test	Result – Remark	Verdict
	value' means the arithmetic mean over the tested units of the measured values for a given parameter or the arithmetic mean of parameter values calculated from measured values.		
	3. If the results referred to in point 2(a), (b) or (c) are not achieved, the model and all equivalent models shall be considered not to comply with this Regulation.		N
	4. The authorities of the Member State shall provide all relevant information to the authorities of the other Member States and to the Commission without delay after a decision is taken on the non-compliance of the model in accordance with point 3 of this Annex.		N
	The authorities of the Member State shall only apply the verification tolerances that are set out in Table 6 and shall use only the procedure described in this Annex. For the parameters in Table 6, no other tolerances, such as those set out in harmonised standards or in any other measurement method, shall be applied.	See appendix 1	P
	For light sources with linear geometry which are scalable but of very long length, such as LED strips or strings, verification testing of market surveillance authorities shall consider a length of 50 cm, or, if the light source is not scalable there, the nearest value to 50 cm. The light source manufacturer or importer shall indicate which separate control gear is suitable for this length.		N
	When verifying if a product is a light source, market surveillance authorities shall compare the measured values for chromaticity coordinates (x and y), luminous flux, luminous flux density, and colour rendering index directly with the limit values set out in the definition for light source of Article 2 of this Regulation, without applying any tolerances. If any of the 10 units in the sample satisfies the conditions for being a light source, the product model shall be considered to be a light source.		P
	Light sources that allow the end-user to control, manually or automatically, directly or remotely, the luminous intensity, colour, correlated colour temperature, spectrum, and/or beam angle of the emitted light shall be evaluated using the reference control settings.		N
Annex V	**Functionality after endurance testing**		P
	Models of LED- and OLED- light sources shall undergo endurance testing to verify their lumen maintenance and survival factor. This endurance testing consists of the test method outlined below. The authorities of a Member State shall test 10 units of the model for this test.		P
	The endurance test for LED and OLED light sources shall be conducted as follows:		P
	(a) Ambient conditions and test setup		P
	(b) Endurance test method	Switching 1200 cycles, 150 minutes switched ON and 30 minutes switched OFF	P

COMMISSION DELEGATED REGULATION (EU) 2019/2015 and (EU) 2021/340			
Clause	Requirement + Test	Result – Remark	Verdict
Annex I	**Definitions applicable for the Annexes**		P
Annex II	**Energy efficiency classes and calculation method**		P
	The energy efficiency class of light sources shall be determined as set out in below table, on the basis of the total mains efficacy η_{TM}, which is calculated by dividing the declared useful luminous flux Φ_{use} by the declared on-mode power consumption P_{on} and multiplying by the applicable factor F_{TM} of below table, as follows:	See appendix 1	P
	$\eta_{TM} = (\Phi_{use}/P_{on}) \times F_{TM}$ (lm/W)		P
	Table: Energy efficiency classes of light sources		P
	Energy efficiency class / Total mains efficacy η_{TM} (lm/W)		P
	A / $210 \leq \eta_{TM}$		N
	B / $185 \leq \eta_{TM} < 210$		N
	C / $160 \leq \eta_{TM} < 185$		N
	D / $135 \leq \eta_{TM} < 160$		N
	E / $110 \leq \eta_{TM} < 135$		P
	F / $85 \leq \eta_{TM} < 110$		N
	G / $\eta_{TM} < 85$		N
	Table: Factors F_{TM} by light source type		P
	Light source type / Factor F_{TM}		P
	Non-directional (NDLS) operating on mains (MLS) / 1.000	$F_{TM} = 1.000$	P
	Non-directional (NDLS) not operating on mains (NMLS) / 0.926		N
	Directional (DLS) operating on mains (MLS) / 1.176		N
	Directional (DLS) not operating on mains (NMLS) / 1.089		N
Annex III	**Label for light sources**		
1.	**LABEL**		P
	If the light source is intended to be marketed through a point of sale, a label produced in the format and containing information as set out in this Annex is printed on the individual packaging.	Supplier considered	P
	Suppliers shall choose a label format between point 1.1 and point 1.2 of this Annex. The label shall be:		P
	—for the standard-sized label at least 36 mm wide and 72 mm high;		--
	—for the small-sized label (width less than 36 mm) at least 20 mm wide and 54 mm high.		
	The packaging shall not be smaller than 20 mm wide and 54 mm high.		P
	Where the label is printed in a larger format, its content shall nevertheless remain proportionate to the specifications above. The small-sized label shall not be used on packaging with a width of 36 mm or more.		P
	The label and the arrow indicating the energy efficiency class may be printed in monochrome as specified in points 1.1 and 1.2, only if all other information, including graphics, on the packaging is printed in monochrome.		P
	If the label is not printed on the part of the packaging meant to face	Supplier considered	P

	the prospective customer, an arrow containing the letter of the energy efficiency class shall be displayed as hereafter, with the colour of the arrow matching the letter and the colour of the energy class. The size shall be such that the label is clearly visible and legible. The letter in the energy efficiency class arrow shall be Calibri Bold and positioned in the centre of the rectangular part of the arrow, with a border of 0,5 pt in 100 % black placed around the arrow and the letter of the efficiency class.		
1.1	Standard-sized label:		--
1.2	Small-sized label:		
1.3	The following information shall be included in the label for light sources:		P
	I. supplier's name or trade mark;		P
	II. supplier's model identifier;		P
	III. scale of energy efficiency classes from A to G;		P
	IV. the energy consumption, expressed in kWh of electricity consumption per 1000 hours, of the light source in on-mode;		P
	V. QR-code;		P
	VI. the energy efficiency class in accordance with Annex II;		P
	VII. the number of this Regulation that is '2019/2015'.		P
2.	**LABEL DESIGNS**		P
2.1	Standard-sized label		--
2.2	Small-sized label		
2.3	Whereby		P
Annex V	**Product information**		P
1.	**Product information sheet**		P
1.1	Pursuant to point 1(b) of Article 3, the supplier shall enter into the product database the information as set out in page 2-3, including when the light source is a part in a containing product.	See page 2-3	P
	For light sources that can be tuned to emit light at full-load with different characteristics, the values of parameters that vary with these characteristics shall be reported at the reference control settings.		N
	If the light source is no longer placed on the EU market, the supplier shall put in the product database the date (month, year) when the placing on the EU market stopped.	Supplier considered	P
2.	**Information to be displayed in the documentation for a containing product**	Supplier considered	P
	If a light source is placed on the market as a part in a containing product, the technical documentation for the containing product shall clearly identify the contained light source(s), including the energy efficiency class.		P
	If a light source is placed on the market as a part in a containing product, the following text shall be displayed, clearly legible, in the user manual or booklet of instructions:		P
	'This product contains a light source of energy efficiency class <X>' where <X> shall be replaced by the energy efficiency class of the contained light source.		P

	If the product contains more than one light source, the sentence can be in the plural, or repeated per light source, as suitable.		P
3.	**Information to be displayed on the supplier's free access website:**	Supplier considered	P
	(a) The reference control settings, and instructions on how they can be implemented, where applicable;		P
	(b) Instructions on how to remove lighting control parts and/or non-lighting parts, if any, or how to switch them off or minimize their power consumption;		P
	(c) If the light source is dimmable: a list of dimmers it is compatible with, and the light source — dimmer compatibility standard(s) it is compliant with, if any;		N
	(d) If the light source contains mercury: instructions on how to clean up the debris in case of accidental breakage;		N
	(e) Recommendations on how to dispose of the light source at the end of its life in line with Directive 2012/19/EU of the European Parliament and of the Council		P
4.	**Information for products specified in point 3 of Annex IV**		N
Annex VI	**Technical documentation**		P
1.	The technical documentation referred to in point 1(d) of Article 3 shall include:		P
	(a) the name and address of the supplier;		P
	(b) supplier's model identifier;		P
	(c) the model identifier of all equivalent models already placed on the market;		P
	(d) identification and signature of the person empowered to bind the supplier;		P
	(e) the declared and measured values for the following technical parameters:	See Appendix 1	P
	(1) useful luminous flux (Φ_{use}) in lm;		P
	(2) colour rendering index (CRI);		P
	(3) on-mode power (P_{on}) in W;		P
	(4) beam angle in degrees for directional light sources (DLS);		N
	(4a) peak luminous intensity in cd for directional light sources (DLS);		N
	(5) correlated colour temperature (CCT) in K;		P
	(6) 'standby power (P_{sb}) in W, including when it is zero;		P
	(7) networked standby power (P_{net}) in W for connected light sources (CLS);		N
	(7a) R9 colour rendering index value for LED and OLED light sources;		P
	(7b) survival factor for LED and OLED light sources;		P
	(7c) lumen maintenance factor for LED and OLED light sources;		P
	(7d) indicative lifetime L70B50 for LED and OLED light sources;		P
	(8) displacement factor (cos φ1) for LED and OLED mains light sources;		P

	(9) colour consistency in MacAdam ellipse steps for LED and OLED light sources;		P
	(10) luminance-HLLS in cd/mm^2 (only for HLLS)		N
	(11) flicker metric ($P_{st}LM$) for LED and OLED light sources;		P
	(12) stroboscopic effect metric (SVM) for LED and OLED light sources;		P
	(13) excitation purity, only for CTLS, for the following colours and dominant wavelength within the given range: Colour Dominant wave-length range Blue 440 nm — 490 nm Green 520 nm — 570 nm Red 610 nm — 670 nm		N
	(f) the calculations performed with the parameters, including the determination of the energy efficiency class;		P
	(g) references to the harmonised standards applied or other standards used;		P
	(h) testing conditions if not described sufficiently in point (g);		P
	(i) the reference control settings, and instructions on how they can be implemented, where applicable;		N
	(j) instructions on how to remove lighting control parts and/or non-lighting parts, if any, or how to switch them off or minimise their power consumption during light source testing;		N
	(k) specific precautions that shall be taken when the model is assembled, installed, maintained or tested.		P
Annex VII	**Information to be provided in visual advertisements, in technical promotional material and in distance selling, except distance selling on the internet**	Supplier considered	P
Annex VIII	**Information to be provided in the case of distance selling on the internet**	Supplier considered	

Appendix 1-Summary of Test

Summary of testing period
1. ☒ Report for initial test. 2. ☒ The previous report WTZ20F11088526N is replaced by this report. The 3600 hours endurance tests of equipment under test (EUT) are updated in this report.

Model: LED Module of LS1048/LS1058 (3000K)

Summary of Test Results

Parameter	Declared value	Determined value (Arithmetic mean)	Verdict
Full-load on-mode power P_{on} [W]	4.5	4.45	P
Displacement factor [0-1]	0.53	0.53	P
Useful luminous flux Φuse [lm]	550	555.43	P
No-load power P_{no} [W]	--	--	N
Standby power P_{sb} [W]	0	0	P
Networked standby power P_{net} [W]	--	--	N
CRI Ra [0-100]	80	83.7	P
CRI R9 [0-100]	11	11	P
Flicker [P_{st} LM]	0.1	0.01	P
Stroboscopic effect [SVM]	0.1	0.00	P
Colour consistency [MacAdam ellips steps]	2	1.5	P
Beam angle [°]	--	--	N
Total mains efficacy η_{TM} [lm/W]	122.22	124.77	P
Excitation purity [%]	--	--	N
Correlated colour temperature [K]	3000	3040	P
Peak luminous intensity [cd]	--	--	N

Model: LED Module of LS1048/LS1058 (4000K)			
Summary of Test Results			
Parameter	Declared value	Determined value (Arithmetic mean)	Verdict
Full-load on-mode power P_{on} [W]	8.5	8.50	P
Displacement factor [0-1]	0.56	0.56	P
Useful luminous flux Φuse [lm]	1100	1109.99	P
No-load power P_{no} [W]	--	--	N
Standby power P_{sb} [W]	0	0	P
Networked standby power P_{net} [W]	--	--	N
CRI Ra [0-100]	80	86.5	P
CRI R9 [0-100]	23	23	P
Flicker [P_{st} LM]	0.1	0.01	P
Stroboscopic effect [SVM]	0.1	0.00	P
Colour consistency [MacAdam ellips steps]	4	3.6	P
Beam angle [°]	--	--	N
Total mains efficacy η_{TM} [lm/W]	129.41	130.56	P
Lumen maintenance factor (for LED and OLED)	0.96	0.9701	P
Survival factor (for LED and OLED)	1.00	1	P
Excitation purity [%]	--	--	N
Correlated colour temperature [K]	4000	4310	P
Peak luminous intensity [cd]	--	--	N

Model: LED Module of LS1048/LS1058 (6500K)			
Summary of Test Results			
Parameter	Declared value	Determined value (Arithmetic mean)	Verdict
Full-load on-mode power P_{on} [W]	4.5	4.35	P
Displacement factor [0-1]	0.53	0.53	P
Useful luminous flux Φuse [lm]	570	570.15	P
No-load power P_{no} [W]	--	--	N
Standby power P_{sb} [W]	0	0	P
Networked standby power P_{net} [W]	--	--	N
CRI Ra [0-100]	80	83.4	P
CRI R9 [0-100]	5	5	P
Flicker [P_{st} LM]	0.1	0.01	P
Stroboscopic effect [SVM]	0.1	0.00	P
Colour consistency [MacAdam ellips steps]	1	0.9	P
Beam angle [°]	--	--	N
Total mains efficacy η_{TM} [lm/W]	126.67	131.02	P
Excitation purity [%]	--	--	N
Correlated colour temperature [K]	6500	6355	P
Peak luminous intensity [cd]	--	--	N

Appendix 2-Test Data Sheet

Test Data Sheet 1: Energy Efficiency

Model: LED Module of LS1048/LS1058 (3000K)					
Sample No.	Full-load on-mode power P_{on} [W]	Useful luminous flux Φ_{use} (sphere 360°) [lm]	Efficacy based on Φ_{use} [lm/W]	Total mains efficacy η_{TM} [lm/W]	Standby power P_{sb} [W]
1	4.41	551.17	125.07	125.07	0.00
2	4.43	551.67	124.59	124.59	0.00
3	4.46	555.76	124.50	124.50	0.00
4	4.47	557.85	124.94	124.94	0.00
5	4.48	559.04	124.81	124.81	0.00
6	4.44	554.09	124.80	124.80	0.00
7	4.43	554.38	125.20	125.20	0.00
8	4.49	558.02	124.20	124.20	0.00
9	4.45	556.03	124.89	124.89	0.00
10	4.46	556.31	124.73	124.73	0.00
Arithmetic mean	**4.45**	**555.43**	**124.77**	**124.77**	**0.00**

Model: LED Module of LS1048/LS1058 (4000K)					
Sample No.	Full-load on-mode power P_{on} [W]	Useful luminous flux Φ_{use} (sphere 360°) [lm]	Efficacy based on Φ_{use} [lm/W]	Total mains efficacy η_{TM} [lm/W]	Standby power P_{sb} [W]
1	8.51	1112.60	130.77	130.77	0.00
2	8.51	1103.39	129.70	129.70	0.00
3	8.50	1114.53	131.14	131.14	0.00
4	8.49	1102.65	129.85	129.85	0.00
5	8.51	1113.76	130.91	130.91	0.00
6	8.50	1116.76	131.32	131.32	0.00
7	8.51	1109.71	130.46	130.46	0.00
8	8.50	1105.69	130.14	130.14	0.00
9	8.49	1106.52	130.29	130.29	0.00
10	8.50	1114.32	131.05	131.05	0.00
Arithmetic mean	**8.50**	**1109.99**	**130.56**	**130.56**	**0.00**

Model: LED Module of LS1048/LS1058 (6500K)					
Sample No.	Full-load on-mode power P_{on} [W]	Useful luminous flux Φ_{use} (sphere 360°) [lm]	Efficacy based on Φ_{use} [lm/W]	Total mains efficacy η_{TM} [lm/W]	Standby power P_{sb} [W]
1	4.30	568.57	132.16	132.16	0.00
2	4.31	571.50	132.57	132.57	0.00
3	4.39	575.32	131.20	131.20	0.00
4	4.37	578.58	132.34	132.34	0.00
5	4.37	566.35	129.51	129.51	0.00
6	4.37	560.76	128.32	128.32	0.00
7	4.31	570.05	132.39	132.39	0.00
8	4.35	563.34	129.50	129.50	0.00
9	4.39	569.42	129.68	129.68	0.00
10	4.36	577.59	132.57	132.57	0.00
Arithmetic mean	**4.35**	**570.15**	**131.02**	**131.02**	**0.00**

Test Data Sheet 2: Functional

Model: LED Module of LS1048/LS1058(3000K)					
Sample No.	Colour rendering index (CRI)	Colour consistency (SDCM) [step]	Displacement factor (DF, cosφ1)	Flicker (P_{st} LM)	Stroboscopic effect (SVM)
1	83.5	1.7	0.52	0.01	0.00
2	83.9	1.1	0.54	0.01	0.00
3	83.6	1.5	0.53	0.01	0.00
4	83.8	1.9	0.53	0.01	0.00
5	83.9	1.3	0.54	0.01	0.00
6	83.0	1.2	0.54	0.01	0.00
7	83.6	1.3	0.54	0.01	0.00
8	83.9	1.3	0.54	0.01	0.00
9	83.4	1.8	0.53	0.01	0.00
10	83.9	1.7	0.53	0.01	0.00
Arithmetic mean	**83.7**	**1.5**	**0.53**	**0.01**	**0.00**

Model: LED Module of LS1048/LS1058(4000K)					
Sample No.	Colour rendering index (CRI)	Colour consistency (SDCM) [step]	Displacement factor (DF, cosφ1)	Flicker (P_{st} LM)	Stroboscopic effect (SVM)
1	86.2	3.5	0.56	0.01	0.00
2	86.3	3.9	0.55	0.01	0.00
3	86.6	3.3	0.56	0.01	0.00
4	86.9	3.9	0.56	0.01	0.00
5	86.7	3.5	0.55	0.01	0.00
6	86.1	3.4	0.55	0.01	0.00
7	86.9	3.6	0.56	0.01	0.00
8	86.9	3.5	0.55	0.01	0.00
9	86.3	3.6	0.56	0.01	0.00
10	86.1	3.7	0.56	0.01	0.00
Arithmetic mean	**86.5**	**3.6**	**0.56**	**0.01**	**0.00**

Model: LED Module of LS1048/LS1058(6500K)					
Sample No.	Colour rendering index (CRI)	Colour consistency (SDCM) [step]	Displacement factor (DF, cosφ1)	Flicker (P_{st} LM)	Stroboscopic effect (SVM)
1	83.1	0.9	0.51	0.01	0.00
2	83.3	1.0	0.54	0.01	0.00
3	83.2	0.6	0.54	0.01	0.00
4	83.9	1.4	0.54	0.01	0.00
5	83.2	1.2	0.54	0.01	0.00
6	83.1	1.0	0.54	0.01	0.00
7	83.9	0.7	0.53	0.01	0.00
8	83.1	0.6	0.54	0.01	0.00
9	83.1	0.9	0.54	0.01	0.00
10	83.9	0.5	0.53	0.01	0.00
Arithmetic mean	**83.4**	**0.9**	**0.53**	**0.01**	**0.00**

Test Data Sheet 3: Functional-Continued

Model: LED Module of LS1048/LS1058(4000K)					
Sample No.	Total luminous flux Φ_{Total} [lm]	Total luminous flux at ON 3000 hours [lm]	Lumen maintenance factor (X_{LMF}%)	Switching cycles (1200 cycles)	Survival factor
1	1112.60	1082.67	97.31%	Pass	Pass
2	1112.44	1087.08	97.72%	Pass	Pass
3	1119.45	1085.98	97.01%	Pass	Pass
4	1100.99	1070.38	97.22%	Pass	Pass
5	1103.00	1074.87	97.45%	Pass	Pass
6	1100.25	1077.14	97.90%	Pass	Pass
7	1104.54	1060.47	96.01%	Pass	Pass
8	1115.72	1080.80	96.87%	Pass	Pass
9	1110.55	1066.79	96.06%	Pass	Pass
10	1102.14	1064.23	96.56%	Pass	Pass
Arithmetic mean	**1108.17**	**1075.04**	**97.01%**	**Pass**	**100%**

Test Data Sheet 4: Other Parameter

Model: LED Module of LS1048/LS1058(3000K)			
Sample No.	Power factor (PF)	R9 colour rendering index	Correlated colour temperature CCT [K]
1	0.40	11	3036
2	0.40	11	3038
3	0.39	11	3047
4	0.40	11	3046
5	0.40	11	3029
6	0.40	11	3047
7	0.40	11	3028
8	0.40	11	3046
9	0.39	11	3046
10	0.39	11	3039
Arithmetic mean	**0.40**	**11**	**3040**

Model: LED Module of LS1048/LS1058(4000K)			
Sample No.	Power factor (PF)	R9 colour rendering index	Correlated colour temperature CCT [K]
1	0.43	23	4322
2	0.42	23	4338
3	0.43	23	4313
4	0.43	23	4340
5	0.42	23	4324
6	0.43	23	4304
7	0.43	23	4331
8	0.43	23	4308
9	0.43	23	4302
10	0.43	23	4312
Arithmetic mean	**0.43**	**23**	**4319**

Model: LED Module of LS1048/LS1058(6500K)			
Sample No.	Power factor (PF)	R9 colour rendering index	Correlated colour temperature CCT [K]
1	0.40	5	6365
2	0.39	5	6357
3	0.40	5	6356
4	0.40	5	6345
5	0.40	5	6363
6	0.40	5	6333
7	0.39	5	6343
8	0.39	5	6364
9	0.39	5	6368
10	0.39	5	6360
Arithmetic mean	**0.39**	**5**	**6355**

Test Data Sheet 5: Other Parameter-Continued (Arithmetic mean)

Model: LED Module of LS1048/LS1058(3000K)	
Beam angle [°]	114.3
Peak luminous intensity [cd]	192.3

Model: LED Module of LS1048/LS1058(4000K)	
Beam angle [°]	115.0
Peak luminous intensity [cd]	386.2

Model: LED Module of LS1048/LS1058(6500K)	
Beam angle [°]	116.0
Peak luminous intensity [cd]	195.8

Test Data Sheet 6: Energy efficiency classes and Label

Model: LED Module of LS1048/LS1058 (4000K)	
Total mains efficacy η_{TM} (lm/W)	(1100/8.5)×1.00 = 129.41 (Declared)
Energy efficiency classes	E
Energy consumption [kWh/1000h]	9 (Declared)
Label sample	
Standard-sized label	

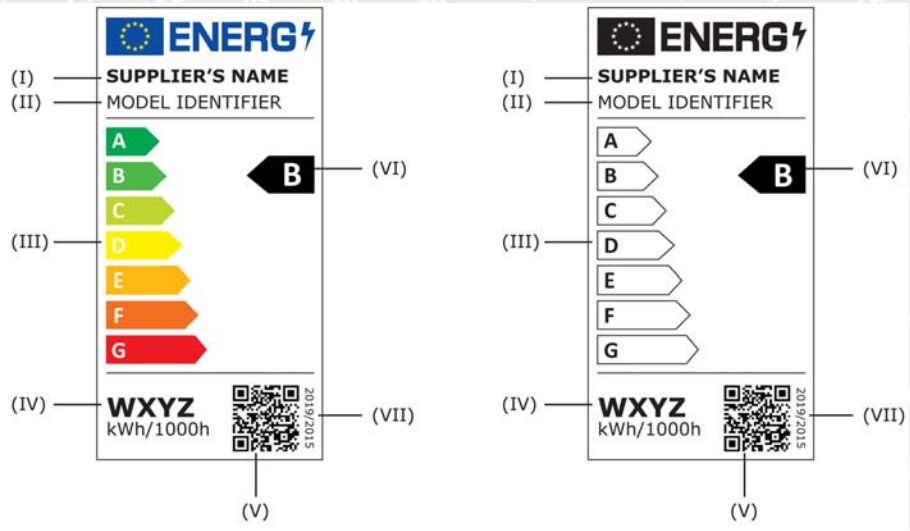

Small-sized label

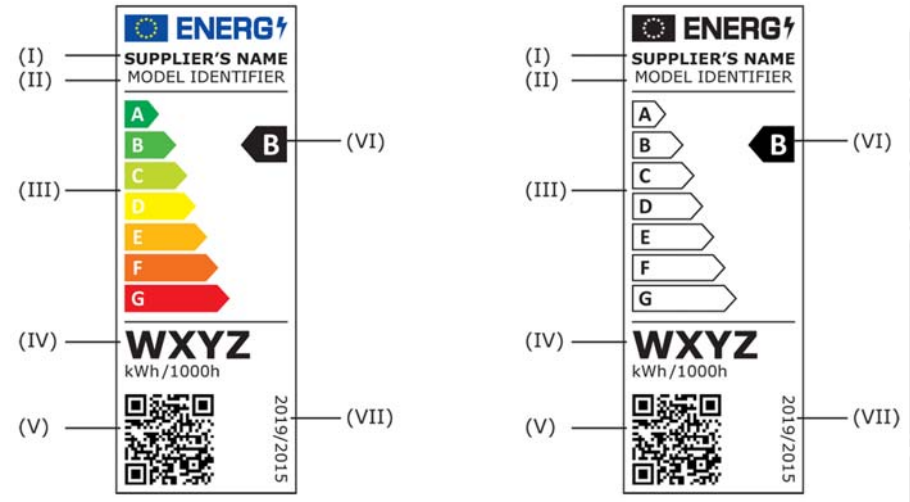

I. supplier's name or trade mark: --

II. supplier's model identifier: --

III. scale of energy efficiency classes from A to G

IV. the energy consumption: 9 kWh/1000h

V. QR-code (quick response): means a matrix barcode included on the energy label of a product model that links to that model's information in the public part of the product database.

VI. the energy efficiency class: E

VII. the number of this Regulation that is '2019/2015'.

Test Data Sheet 7: Luminous intensity distribution diagram

Model: LED Module of LS1048/LS1058(3000K)

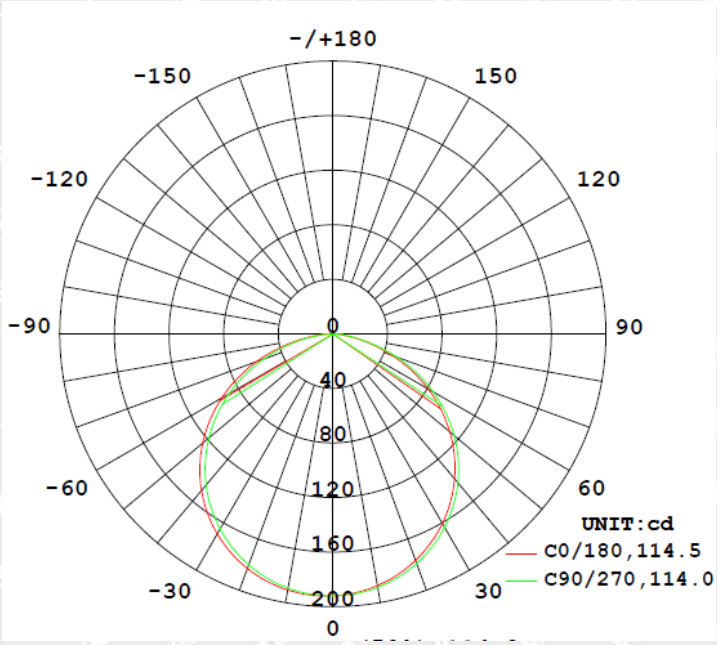

Model: LED Module of LS1048/LS1058(4000K)

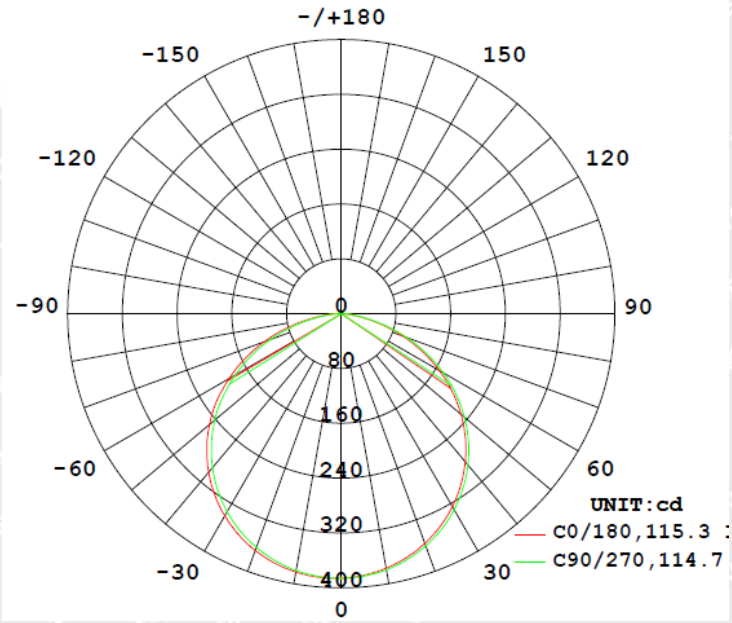

Model: LED Module of LS1048/LS1058(6500K)

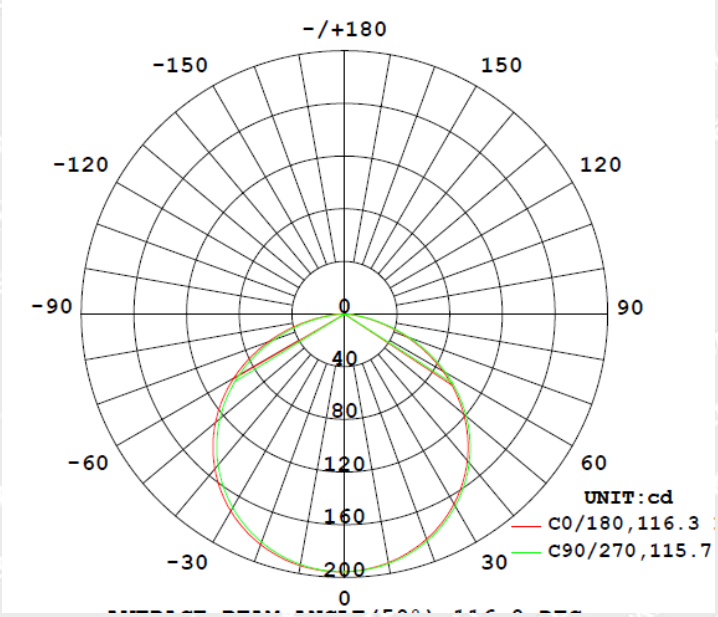

Test Data Sheet 8: Spectral distribution

Model: LED Module of LS1048/LS1058(3000K)

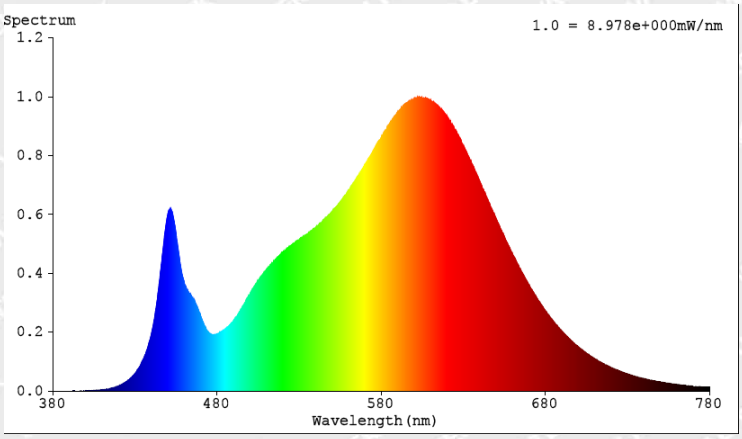

Model: LED Module of LS1048/LS1058(4000K)

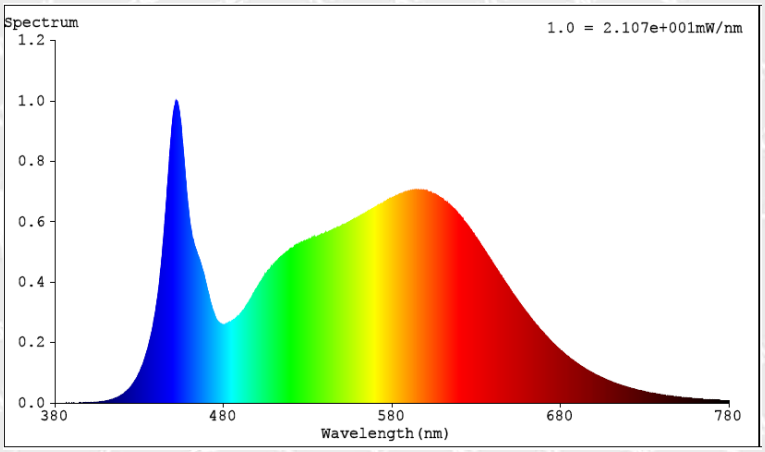

Model: LED Module of LS1048/LS1058(6500K)

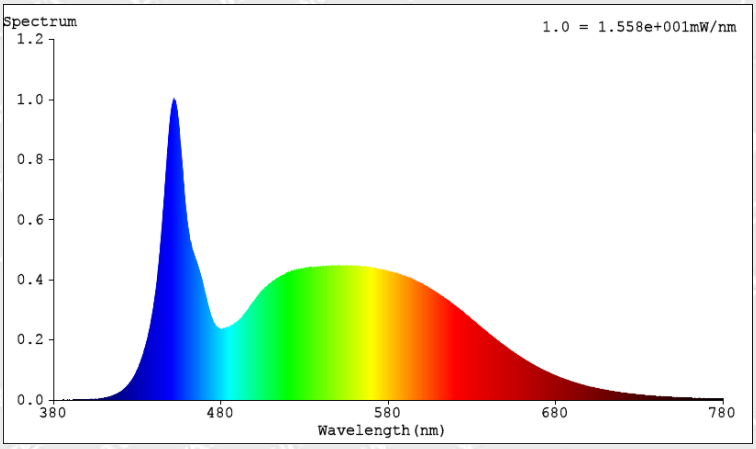

Test Data Sheet 9: Containing product test data @Client (test at 230V, 50Hz)

Model: LS1058(3000K)								
P_{on} [W]	DF	Useful Luminous Flux [lm]	Total Luminous Flux [lm]	Beam Angle [°]	Flicker (Pst LM)	Stroboscopic effect (SVM)	CCT [K]	CRI
4.94	0.54	236.75	285.87	106.7	0.01	0.00	2980	83.3

Model: LS1058(4000K)								
P_{on} [W]	DF	Useful Luminous Flux [lm]	Total Luminous Flux [lm]	Beam Angle [°]	Flicker (Pst LM)	Stroboscopic effect (SVM)	CCT [K]	CRI
9.56	0.59	482.25	584.10	106.5	0.01	0.00	4193	86.0

Model: LS1058(6500K)								
P_{on} [W]	DF	Useful Luminous Flux [lm]	Total Luminous Flux [lm]	Beam Angle [°]	Flicker (Pst LM)	Stroboscopic effect (SVM)	CCT [K]	CRI
4.91	0.53	246.50	297.61	106.6	0.01	0.00	6114	83.0

Attachment 1: Equipment List

Equipment	Model/Type	Cal. Due. Date
Temperature & Humidity Datalogger	Testo 608-H1	2022-01-12
Color luminance meter	EVERFINE CBM-8	2022-01-24
AC power supply	EVERFINE TPS-500B	2022-01-17
DC power supply	EVERFINE WY305-V1	2022-01-17
Power meter	EVERFINE PF2010A-V1-CAN	2022-01-17
High accuracy array spectroradio meter	EVERFINE HAAS-2000	2022-01-17
Integrating Sphere	EVERFINE R98/R80/0.3m	2022-01-17
Standard light source	EVERFINE D204	2022-01-24
Standard light source	EVERFINE D062	2022-01-17
AC power supply	EVERFINE DPS 1060	2022-01-17
DC power supply	EVERFINE WY12010	2022-01-17
Digital Power Meter	EVERFINE PF2010A-V1	2022-01-17
Goniophotometer	EVERFINE GO R5000-2M2D	2022-01-17
Standard lamp	EVERFINE 28V/10A/500cd	2022-01-24
Standard lamp	EVERFINE D908	2022-01-17
Light sources flicker analyzer	EVERFINE LFA-3000	2022-01-24

Attachment 2: Photo document

Model: LED Module of LS1048/LS1058

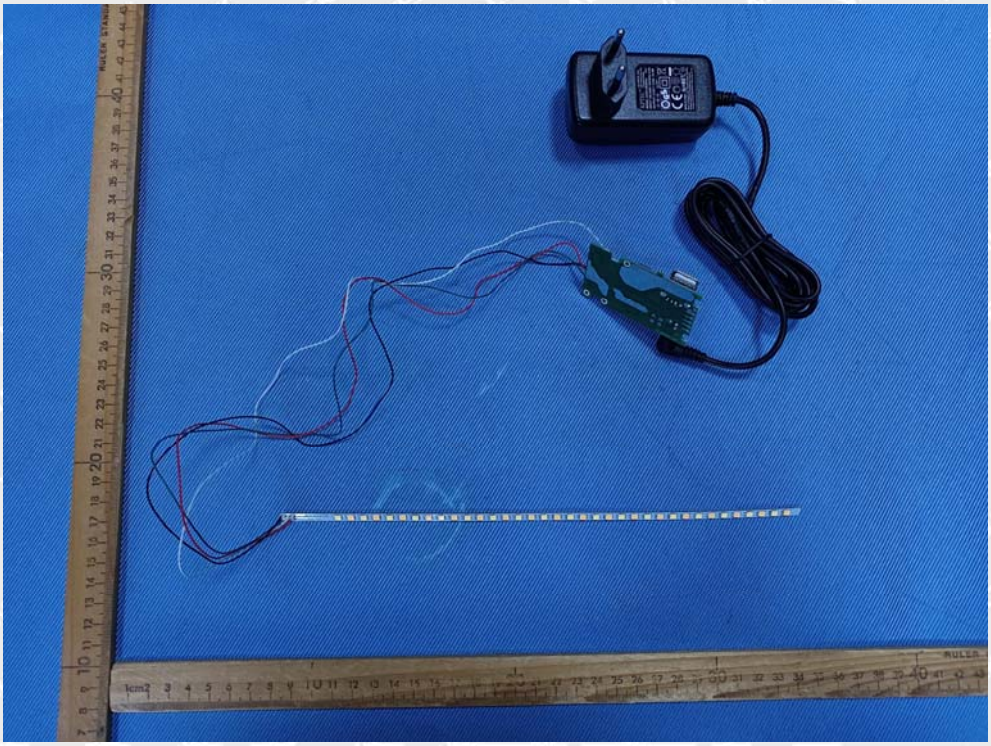

Photo 1

Photo 2

Model: LS1058

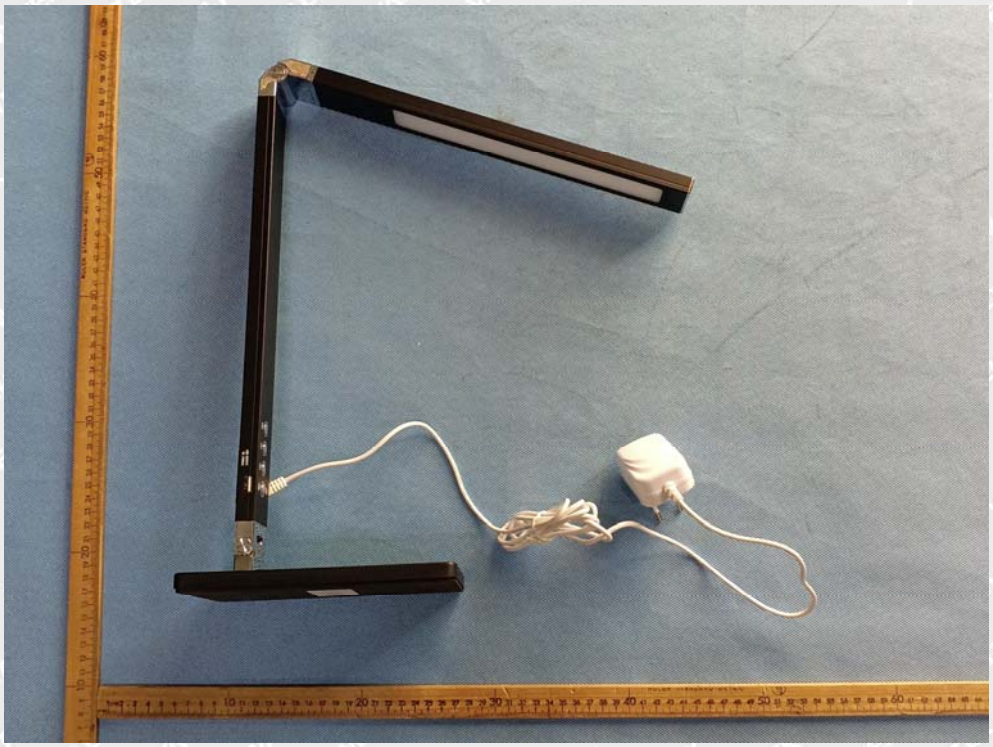

Photo 3

====== End of Report ======