INDUS A/UX

SPECIAL APPLICATION PROFILE

max 10 mm

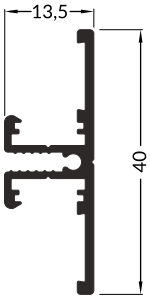

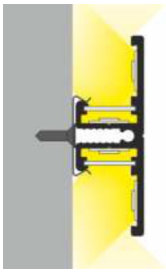

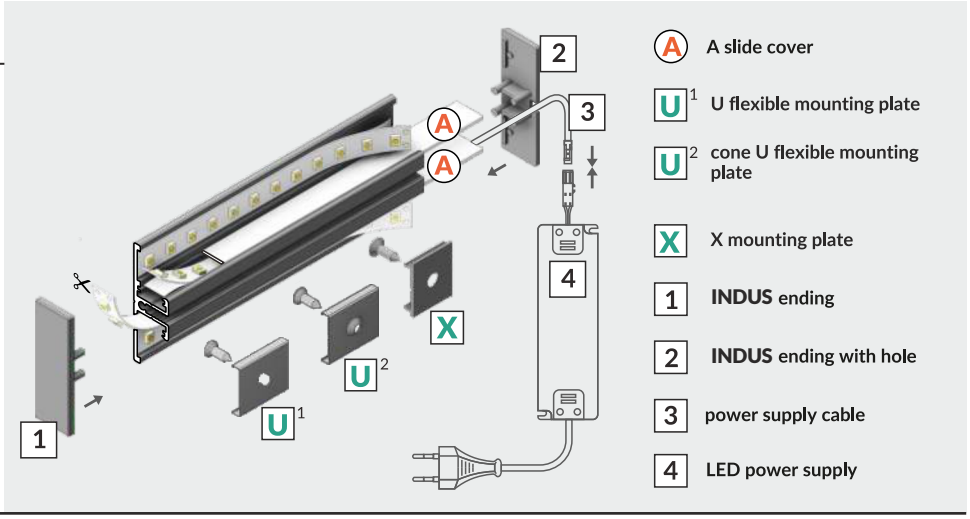

scissors | hacksaw | pliers | solder | soldering iron | screwdriver | drill

I

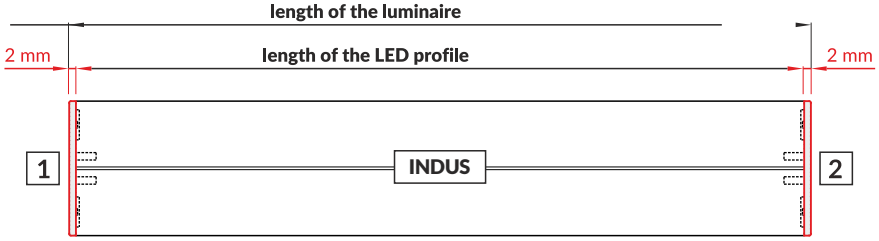

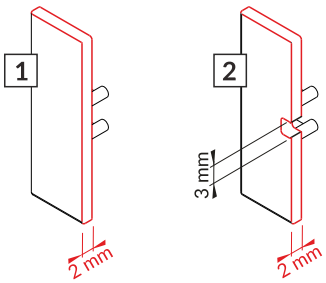

II

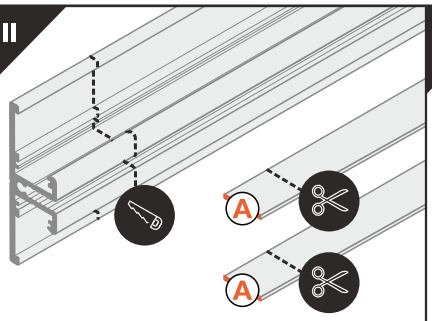

The length of the covers is equal to the length of the profile

III x2

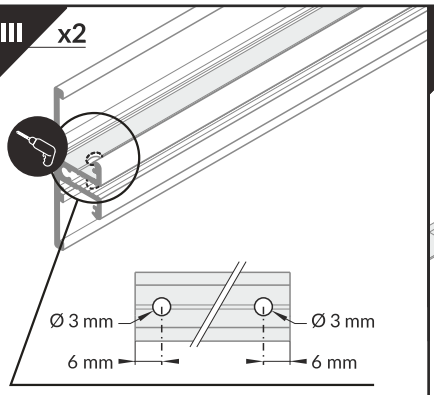

IV x2

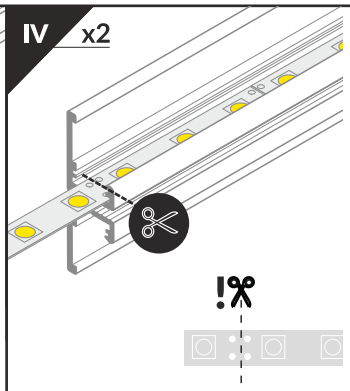

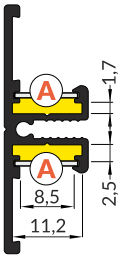

Dimensions of the space to install LED source

V

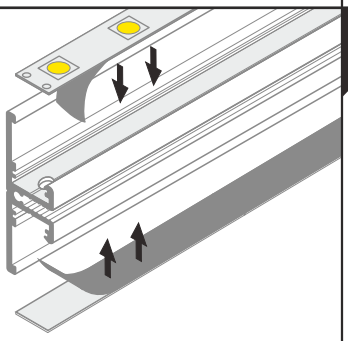

VI

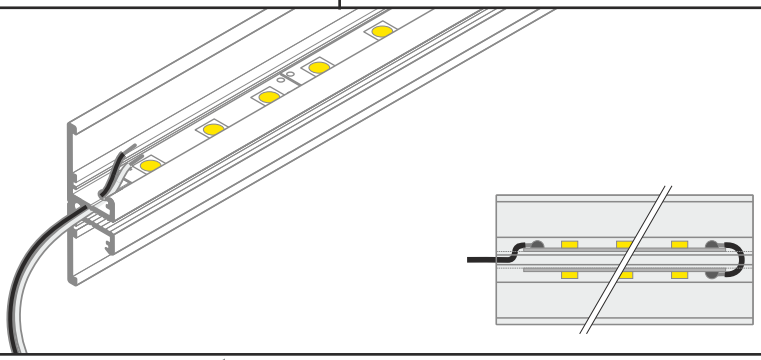

VII

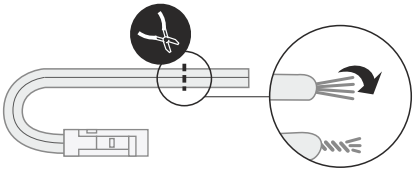

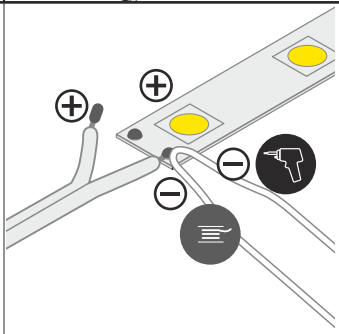

Soldering the wire with LED strip should be done after mounting strip and conducting wire through the hole in the profile.

VIII

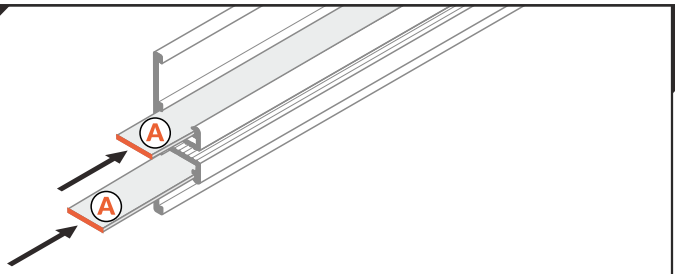

IX

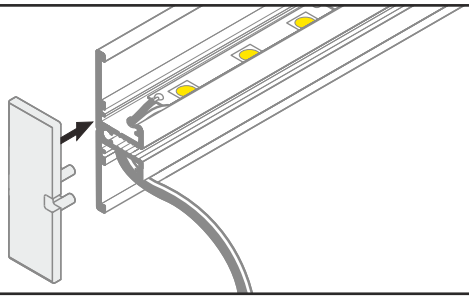

X MOUNTING

Mounting plates				Screws
U flexible mounting plate	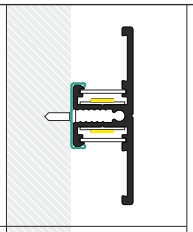	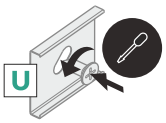	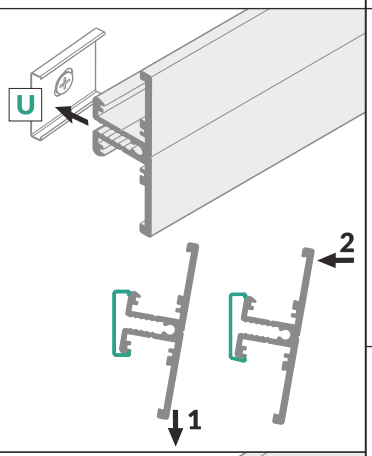	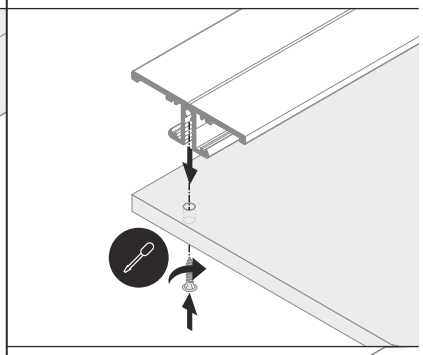
cone U flexible mounting plate	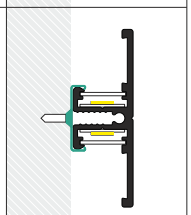			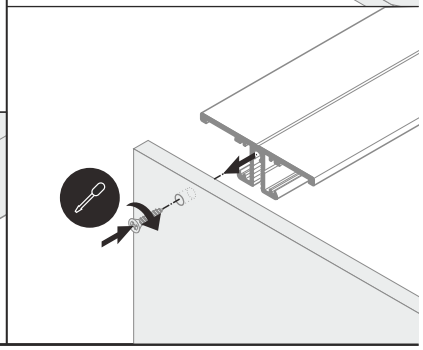
X mounting plate	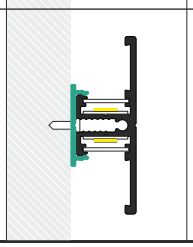	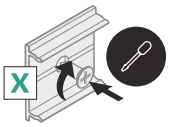	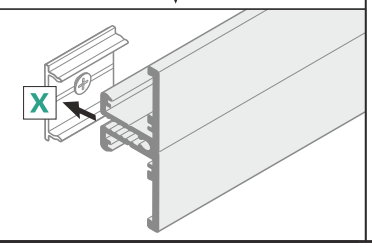	

XI POWER SUPPLY

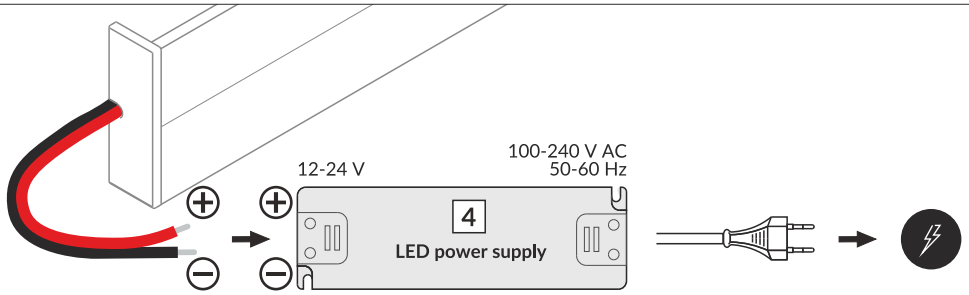

OPTIONAL ACCESSORIES

Mount the connector before installing the LED strip. In case there is no possibility of sliding the profile into connector it is recommended to mount with screws, directly to the mounting surface

X connector 180 deg	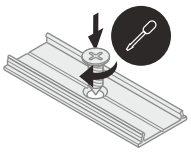	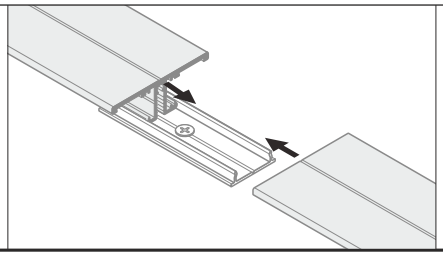	X connector may be used to make extra long profiles by connecting multiple profiles.

ACCESSORIES

power switches
controller + remote
movement sensors