CHARENTE J/S

SURFACE PROFILE

max
12 mm

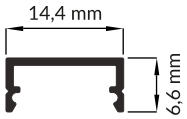

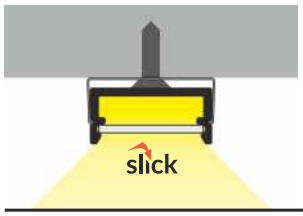

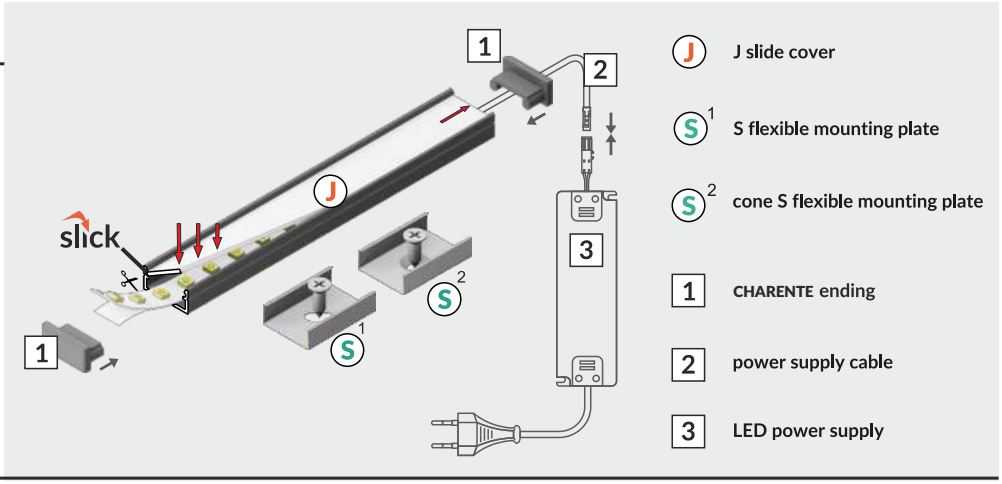

scissors

pliers

soldering iron

solder

glue

I

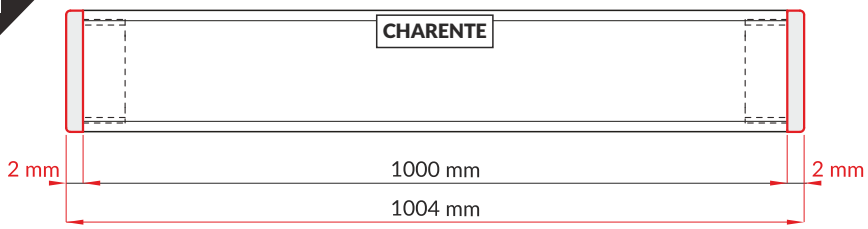

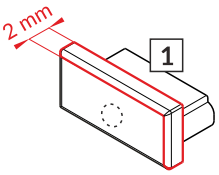

Note! Ending with marked space to bore the holes.

Note! Ending thickness increases the length of the luminaire (+ 2 x 2 mm).

II

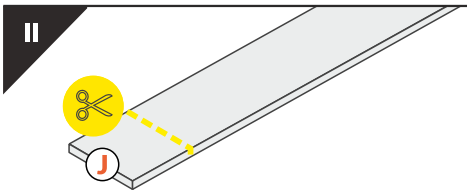

The length of the cover is equal to the length of the profile.

III

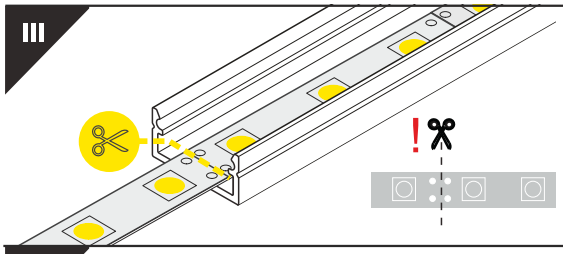

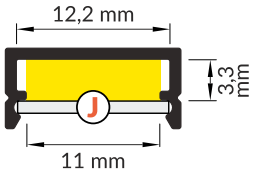

Dimensions of the space to install LED source.

IV

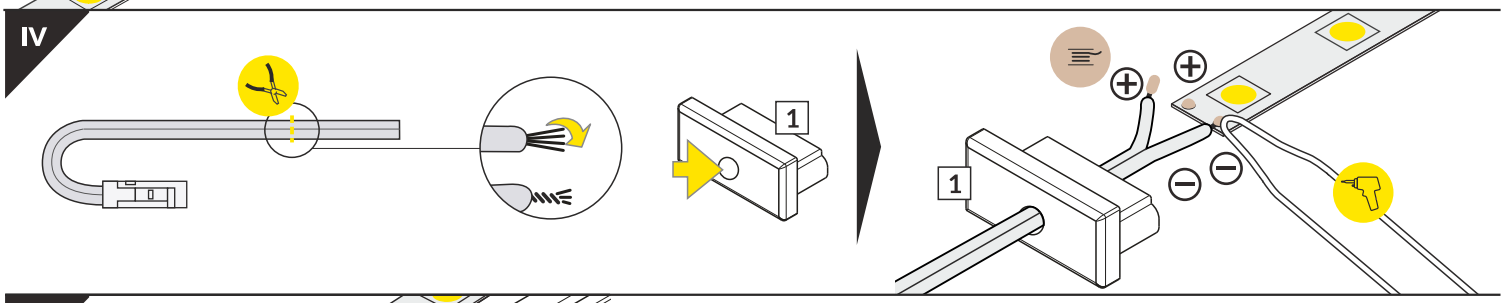

V

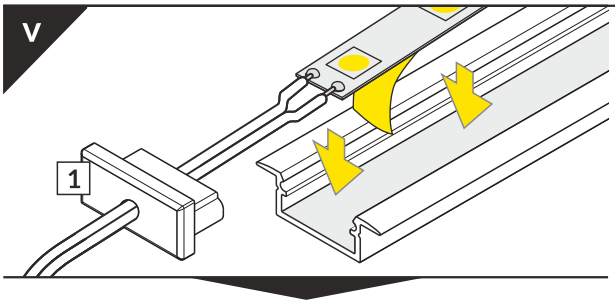

VI

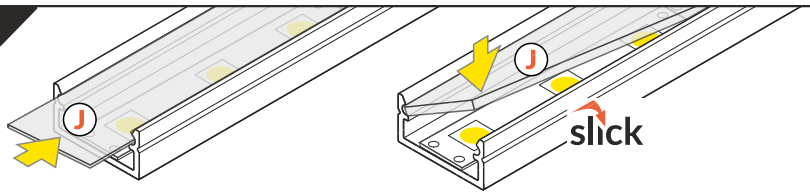

J slide cover

VII MOUNTING

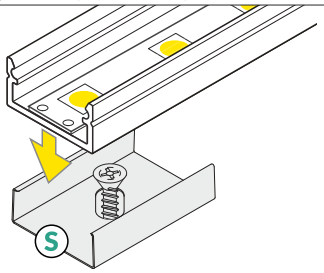

S flexible mounting plate

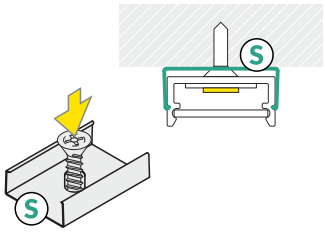

S flexible mounting plate

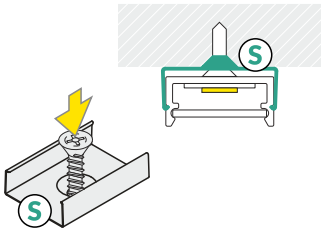

cone S flexible mounting plate

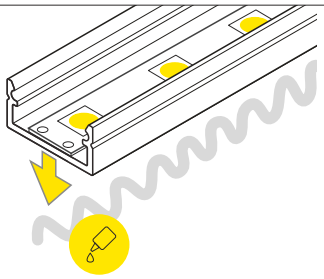

glue

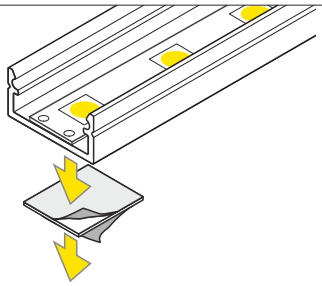

two-sided adhesive tape 25x25

VIII

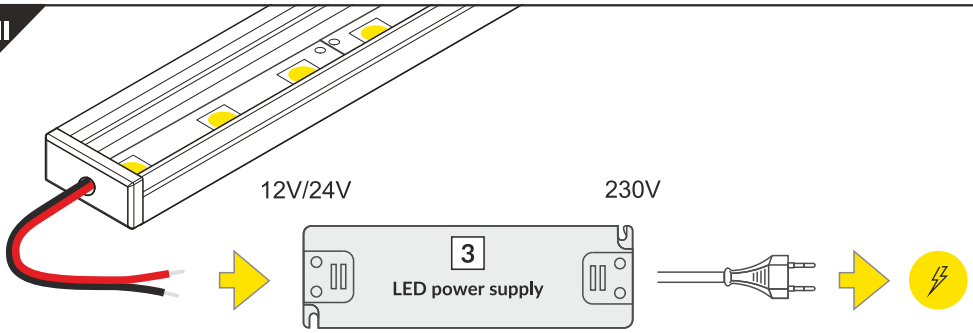

ACCESSORIES

- power switches
- controller + remote
- movement sensors